STATE OF VERMONT
AGENCY OF TRANSPORTATION

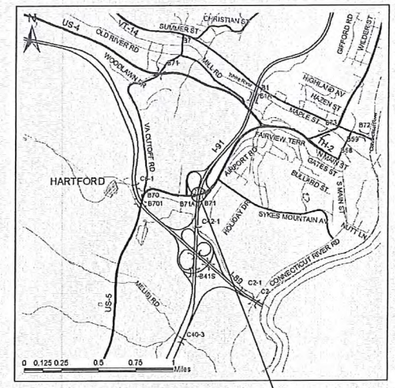

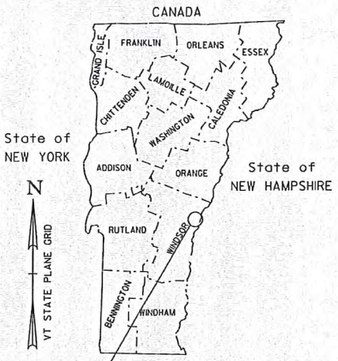

N

VT STATE PLANE GRID

HARTFORD
IM 091-2 (79)

PROPOSED IMPROVEMENT
BRIDGE PROJECT

TOWN OF HARTFORD
COUNTY OF WINDSOR

ROUTE NO : INTERSTATE 91 BRIDGE NO : 43 N/S

PROJECT LOCATION: I-91 EXIT 11

PROJECT DESCRIPTION: DEMOLITION OF EXISTING BRIDGES AND REPLACEMENT WITH NEW SINGLE SPAN BRIDGES.

	NORTH BOUND	SOUTH BOUND
LENGTH OF STRUCTURE:	136.16 FEET	136.16 FEET
LENGTH OF ROADWAY:	88.84 FEET	88.84 FEET
LENGTH OF PROJECT:	225.00 FEET	225.00 FEET

N VT STATE PLANE GRID

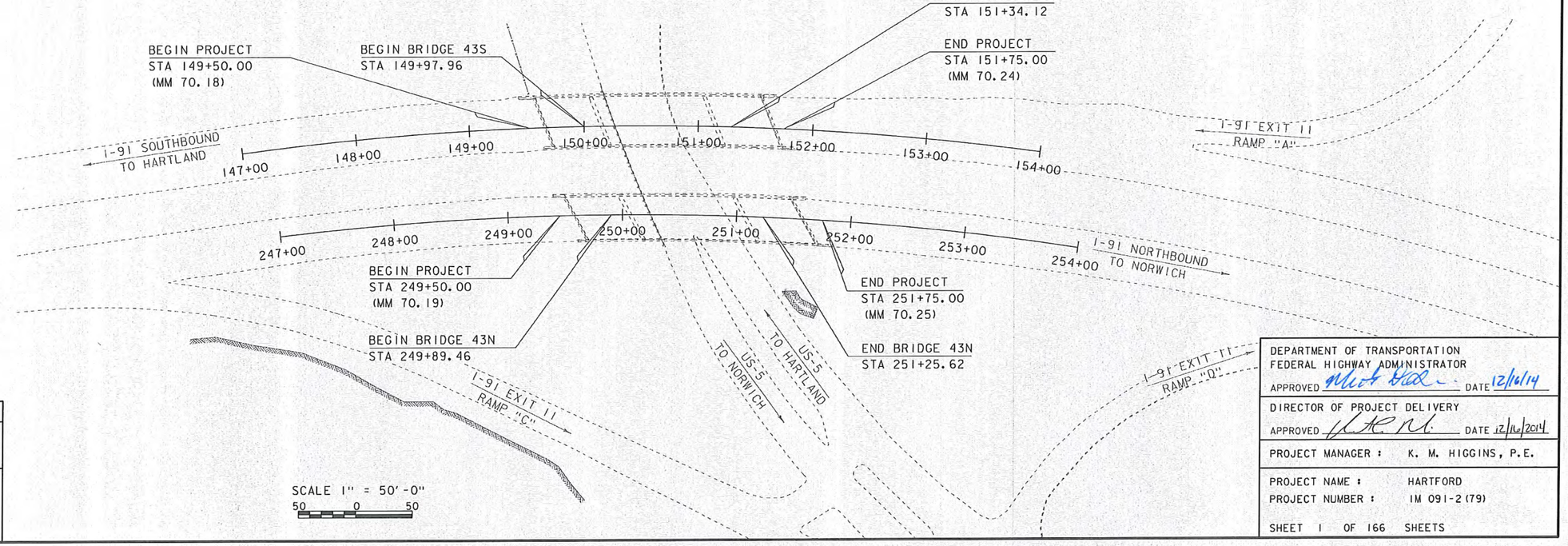

CONSTRUCTION IS TO BE CARRIED ON IN ACCORDANCE WITH THESE PLANS AND THE STANDARD SPECIFICATIONS FOR CONSTRUCTION DATED 2011, AS APPROVED BY THE FEDERAL HIGHWAY ADMINISTRATION ON JULY 20, 2011 FOR USE ON THIS PROJECT, INCLUDING ALL SUBSEQUENT REVISIONS AND SUCH REVISED SPECIFICATIONS AND SPECIAL PROVISIONS AS ARE INCORPORATED IN THESE PLANS.

QUALITY ASSURANCE PROGRAM : LEVEL 1

SURVEYED BY : R. GILMAN
SURVEYED DATE : 02/11/2013

DATUM
VERTICAL NAVD88
HORIZONTAL NAD83 (2011)

DEPARTMENT OF TRANSPORTATION
FEDERAL HIGHWAY ADMINISTRATOR
APPROVED [signature] DATE 12/16/14

DIRECTOR OF PROJECT DELIVERY
APPROVED [signature] DATE 12/16/2014

PROJECT MANAGER : K. M. HIGGINS, P.E.

PROJECT NAME : HARTFORD
PROJECT NUMBER : IM 091-2 (79)

SHEET 1 OF 166 SHEETS

STATE OF VERMONT
AGENCY OF TRANSPORTATION

PRELIMINARY INFORMATION SHEET (BRIDGE)

Version
LRFD

INDEX OF SHEETS

PLAN SHEETS

1	TITLE SHEET
2	BRIDGE 43S PRELIMINARY INFORMATION SHEET
3	BRIDGE 43N PRELIMINARY INFORMATION SHEET
4 - 6	GENERAL NOTES 1-3
7 - 10	QUANTITY SHEETS 1-4
11 - 12	BRIDGE QUANTITY SHEETS 1-2
13 - 15	TYPICAL SECTIONS 1-3
16	LEGEND SHEET
17	TIE SHEET
18 - 20	EXISTING CONDITIONS 1-3
21 - 23	LAYOUT SHEETS 1-3
24	SB PROFILE
25	NB PROFILE
26 - 28	US 5 LAYOUT SHEETS 1-3
29	US 5 PROFILE
30	RAMP A LAYOUT SHEET
31 - 34	1-91 SB TRAFFIC CONTROL PLANS 1-4
35 - 39	1-91 NB TRAFFIC CONTROL PLANS 1-5
40 - 41	RAMP C LAYOUT SHEETS 1-2
42 - 44	US 5 TRAFFIC CONTROL PLANS 1-3
45	SMART WORK ZONE LAYOUT
46	SMART WORK ZONE DETAILS
47 - 49	TEMPORARY TRAFFIC SIGNAL LAYOUT SHEETS 1-3
50	REGIONAL DETOUR LEGEND
51 - 53	DETOUR SCENARIO SHEETS 1-3
54	DRAINAGE LAYOUT SHEET
55	STAGING LAYOUT SHEET
56	UTILITY LAYOUT SHEET
57	SIGN AND PAVEMENT MARKINGS SHEET
58	TRAFFIC SIGN SUMMARY SHEET
59 - 61	US 5 SIGN & PAVEMENT MARKINGS SHEETS 1-3
62 - 63	US 5 TRAFFIC SIGN SUMMARY SHEETS 1-2
64 - 65	RAIL LAYOUT SHEETS 1-2
66 - 68	RAIL DETAILS 1-3
69	EXISTING BORING LAYOUT SHEET
70 - 71	EXISTING BORING LOGS 1-2
72	PROPOSED BORING LAYOUT SHEET
73 - 84	PROPOSED BORING LOGS 1-12
85	SUPERSTRUCTURE TYPICAL 43S
86	SUPERSTRUCTURE TYPICAL 43N
87	FRAMING PLAN BRIDGE 43S
88	FRAMING PLAN BRIDGE 43N
89	CAMBER & DEFLECTION
90	DECK REINFORCING PLAN 43S
91	DECK REINFORCING PLAN 43N
92	SUPERSTRUCTURE DETAILS
93	SUSPENDED BACKWALL DETAILS 43S
94	SUSPENDED BACKWALL DETAILS 43N
95	BEARING NOTES
96	BEARING DETAILS
97	APPROACH SLAB PLAN 43S
98	APPROACH SLAB PLAN 43N
99	APPROACH SLAB DETAILS
100	ABUTMENT TYPICALS
101	ABUTMENT 1
102	ABUTMENT 1 FOOTING
103 - 104	WING WALLS 1-2
105	ABUTMENT 2
106	ABUTMENT 2 FOOTING
107 - 108	WING WALLS 3-4
109	ABUTMENT 3
110	ABUTMENT 3 FOOTING
111 - 112	WING WALLS 5-6
113	ABUTMENT 4
114	ABUTMENT 4 FOOTING
115 - 116	WING WALLS 7-8
117 - 124	RETAINING WALLS 1-8
125	RSS SUPERSTRUCTURE 43S
126	RSS SUPERSTRUCTURE 43N
127 - 130	RSS ABUTMENTS 1-4
131	RSS RETAINING WALLS
132	EPSC NARRATIVE
133 - 134	EPSC PLAN DURING CONSTRUCTION SHEETS 1-2
135 - 136	EPSC PLAN FINAL CONDITIONS SHEETS 1-2
137	EPSC DETAILS
138	MATERIAL TRANSITION I-91
139	BANKING DIAGRAM 1-91
140	BANKING DIAGRAM US 5
141 - 145	I-91 SB CROSS SECTIONS
146 - 150	I-91 NB CROSS SECTIONS
151 - 166	US 5 CROSS SECTIONS

STANDARDS LIST

C-10	CURBING	02-11-2008
D-1	PRECAST REINFORCED CONCRETE DROP INLET DETAILS	06-01-1994
E-120	STANDARD SIGN PLACEMENT - EXPRESSWAY & FREEWAY	08-08-1995
E-123	GUIDE SIGN PLACEMENT - MISCELLANEOUS DETAILS	03-16-2004
E-171A	TRAFFIC CONTROL SIGNALS GENERAL NOTES & DETAILS	08-09-1995
E-171B	TRAFFIC CONTROL SIGNALS MISC. DETAILS	08-09-1995
E-172	VEHICLE DETECTOR LOOP DETAILS	08-09-1995
E-173	PULL BOXES AND JUNCTION BOXES	08-09-1995
E-175	POWER DROP STANCHIONS	06-08-2009
E-180A	STREET LIGHTING DETAILS	08-09-1995
E-180B	STREET LIGHTING DETAILS	08-09-1995
E-191	PAVEMENT MARKING DETAILS	02-01-1999
E-192	PAVEMENT MARKING DETAILS	10-12-2000
F-2	CHAIN LINK FENCE, TYPE I DETAILS	06-01-1994
G-1	STEEL BEAM GUARDRAIL DETAILS (POST, DELINEATOR, TYPICALS)	02-10-2014
G-1D	STEEL BEAM GUARDRAIL DETAILS (END TERMINAL, ANCHOR, MEDIAN)	02-10-2014
G-19	GENERIC GRADING PLANS FOR GUARDRAIL END TERMINALS	11-15-2002
S-363	THRIE BEAM TO STANDARD STEEL BEAM TRANSITION SECTION	04-23-2012
T-1	TRAFFIC CONTROL GENERAL NOTES	08-06-2012
T-11	CONSTRUCTION APPROACH SIGNING DIVIDED HIGHWAY ONE LANE CLOSED	08-06-2012
T-12	TRAFFIC CONTROL DIVIDED HIGHWAY ONE LANE CLOSED	08-06-2012
T-13	TRAFFIC CONTROL DIVIDED HIGHWAY ONE LANE CLOSED	08-06-2012
T-17	TRAFFIC CONTROL MISCELLANEOUS DETAILS	08-06-2012
T-20	TEMPORARY TERMINATION OF EXPRESSWAY & FREEWAY FACILITIES	08-06-2012
T-22	TRAFFIC CONTROL FOR PAVEMENT MARKING ON DIVIDED HIGHWAY	08-06-2012
T-23	TRAFFIC CONTROL FOR PAVEMENT MARKING ON DIVIDED HIGHWAY	08-06-2012
T-28	CONSTRUCTION SIGN DETAILS	08-06-2012
T-31	CONSTRUCTION SIGN DETAILS	08-06-2012
T-35	CONSTRUCTION ZONE LONGITUDINAL DROP-OFFS	08-06-2012
T-36	CONSTRUCTION ZONE LONGITUDINAL DROP-OFFS FOR PAVING	08-06-2012
T-40	DELINEATORS AND MILEPOSTS	01-02-2013
T-42	BRIDGE NUMBER PLAQUE	04-09-2014
T-43	FREEWAY - EXPRESSWAY DELINEATOR PLACEMENT	04-09-2014
T-45	SQUARE TUBE SIGN POST AND ANCHOR	01-02-2013

STRUCTURES DETAIL SHEETS

SD-501.00	CONCRETE DETAILS AND NOTES	5/7/2010
SD-502.00	CONCRETE DETAILS AND NOTES	5/7/2010
SD-516.10	BRIDGE JOINT ASHPALTIC PLUG	5/7/2010
SD-601.00	STRUCTURAL STEEL DETAILS AND NOTES	5/7/2010
SD-602.00	STRUCTURAL STEEL PLATE GIRDER DETAILS AND NOTES	5/7/2010

REVISION	DATE	DESCRIPTION	BY
1	12-17-2014	UPDATED SHEET INDEX	JS

AS BUILT "REBAR" DETAIL

LEVEL I	LEVEL II	LEVEL III
TYPE:	TYPE:	TYPE:
GRADE:	GRADE:	GRADE:

TRAFFIC DATA

YEAR	ADT	DHV	% D	% T	ADTT
2015	11500	1500	100	10.5	1200
2035	13900	1900	100	15.5	2200

20 year ESAL for flexible pavement from 2015 to 2035 : 7704000

40 year ESAL for flexible pavement from 2015 to 2055 : 18573000

Design Speed : 65 mph

FINAL HYDRAULIC REPORT

LRFR LOAD RATING FACTORS

LOADING LEVELS	TRUCK						
	H-20	HL-93	3S2	6 AXLE	3A. STR.	4A. STR.	5A. SEMI
TONNAGE	20	36	36	66	30	34.5	38
INVENTORY	3.07	1.25					
POSTING							
OPERATING	4.00	1.63	2.66	1.60	2.75	2.42	2.40
COMMENTS:							

DESIGN VALUES

1.	DESIGN LIVE LOAD		HL-93
2.	FUTURE PAVEMENT	d_p:	3.0 INCH
3.	DESIGN SPAN	L:	128.00 FT
4.	MIN. MID-SPAN POS. CAMBER @ RELEASE (PRESTRESSED UNITS)	Δ:	- - -
5.	PRESTRESSING STRAND (0.375 INCH DIAMETER - LOW RELAX)	f_y:	270 KSI
6.	PRESTRESSED CONCRETE STRENGTH	f'_c:	5.0 KSI
7.	PRESTRESSED CONCRETE RELEASE STRENGTH	f'_{ci}:	4.0 KSI
8.	CONCRETE, HIGH PERFORMANCE CLASS AA	f'_c:	4.0 KSI
9.	CONCRETE, HIGH PERFORMANCE CLASS A	f'_c:	4.0 KSI
10.	CONCRETE, HIGH PERFORMANCE CLASS B	f'_c:	3.5 KSI
11.	CONCRETE, CLASS C	f'_c:	3.0 KSI
12.	REINFORCING STEEL	f_y:	60 KSI
13.	STRUCTURAL STEEL AASHTO M270 (WEATHERING)	f_y:	50 KSI
14.	NOMINAL BEARING RESISTANCE OF SOIL	q_n:	30.4 KSF
15.	SOIL BEARING RESISTANCE FACTOR (REFER TO AASHTO LRFD)	ϕ:	0.45
16.	NOMINAL BEARING RESISTANCE OF ROCK	q_n:	120.0 KSF
17.	ROCK BEARING RESISTANCE FACTOR (REFER TO AASHTO LRFD)	ϕ:	0.45
18.	PILE RESISTANCE FACTOR	ϕ:	- - -
19.	LATERAL PILE DEFLECTION	Δ:	- - -
20.	BASIC WIND SPEED	V_{3s}:	- - -
21.	MINIMUM GROUND SNOW LOAD	p_g:	- - -
22.	SEISMIC DATA PGA: 0	S_s:	- - -
		S_1:	- - -
23.			
24.			- - -
25.			- - -
26.			- - -

PROJECT NAME: **HARTFORD**

PROJECT NUMBER: **IM 091-2 (79)**

FILE NAME:	s12a132pi.dgn	PLOT DATE:	12/17/2014
PROJECT LEADER:	K. HIGGINS	DRAWN BY:	K. FRIEDLAND
DESIGNED BY:	W. LAMMER	CHECKED BY:	J. SALVATORI
BRIDGE 43S PRELIMINARY INFORMATION SHEET		SHEET 2	OF 166

STATE OF VERMONT
AGENCY OF TRANSPORTATION

PRELIMINARY INFORMATION SHEET (BRIDGE)

Version
LRFD

INDEX OF SHEETS

PLAN SHEETS	STANDARDS LIST

FINAL HYDRAULIC REPORT

TRAFFIC MAINTENANCE NOTES

1. MAINTAIN TRAFFIC ON AN OFF SITE DETOUR.
2. TRAFFIC SIGNALS ARE NOT NECESSARY.
3. SIDEWALKS ARE NOT NECESSARY

DESIGN VALUES

1.	DESIGN LIVE LOAD		HL-93
2.	FUTURE PAVEMENT	d_p:	3.0 INCH
3.	DESIGN SPAN	L:	128.00 FT
4.	MIN. MID-SPAN POS. CAMBER @ RELEASE (PRESTRESSED UNITS)	Δ:	- - -
5.	PRESTRESSING STRAND (0.375 INCH DIAMETER - LOW RELAX)	f_y:	270 KSI
6.	PRESTRESSED CONCRETE STRENGTH	f'_c:	5.0 KSI
7.	PRESTRESSED CONCRETE RELEASE STRENGTH	f'_{ci}:	4.0 KSI
8.	CONCRETE, HIGH PERFORMANCE CLASS AA	f'_c:	4.0 KSI
9.	CONCRETE, HIGH PERFORMANCE CLASS A	f'_c:	4.0 KSI
10.	CONCRETE, HIGH PERFORMANCE CLASS B	f'_c:	3.5 KSI
11.	CONCRETE, CLASS C	f'_c:	3.0 KSI
12.	REINFORCING STEEL	f_y:	60 KSI
13.	STRUCTURAL STEEL AASHTO M270 (WEATHERING)	f_y:	50 & 70 KSI
14.	NOMINAL BEARING RESISTANCE OF SOIL	q_n:	30.4 KSF
15.	SOIL BEARING RESISTANCE FACTOR (REFER TO AASHTO LRFD)	ϕ:	0.45
16.	NOMINAL BEARING RESISTANCE OF ROCK	q_n:	120.0 KSF
17.	ROCK BEARING RESISTANCE FACTOR (REFER TO AASHTO LRFD)	ϕ:	0.45
18.	PILE RESISTANCE FACTOR	ϕ:	- - -
19.	LATERAL PILE DEFLECTION	Δ:	- - -
20.	BASIC WIND SPEED	V_{3s}:	- - -
21.	MINIMUM GROUND SNOW LOAD	p_g:	- - -
22.	SEISMIC DATA PGA: 0	S_s:	- - -
		S_1:	- - -
23.			
24.			- - -
25.			- - -
26.			- - -

LRFR LOAD RATING FACTORS

LOADING LEVELS	TRUCK						
	H-20	HL-93	3S2	6 AXLE	3A. STR.	4A. STR.	5A. SEMI
TONNAGE	**20**	**36**	**36**	**66**	**30**	**34.5**	**38**
INVENTORY	3.21	1.31					
POSTING							
OPERATING	4.16	1.69	2.77	1.67	2.86	2.52	2.50
COMMENTS:							

AS BUILT "REBAR" DETAIL

LEVEL I	LEVEL II	LEVEL III
TYPE:	TYPE:	TYPE:
GRADE:	GRADE:	GRADE:

TRAFFIC DATA

YEAR	ADT	DHV	% D	% T	ADTT
2015	7600	1200	100	10	1000
2035	9100	1500	100	14.8	1800

20 year ESAL for flexible pavement from 2015 to 2035 : 7165000

40 year ESAL for flexible pavement from 2015 to 2055 : 17331000

Design Speed : 65 mph

PROJECT NAME: **HARTFORD**

PROJECT NUMBER: **IM 091-2 (79)**

FILE NAME:	s12a132pi.dgn	PLOT DATE:	12/16/2014
PROJECT LEADER:	K. HIGGINS	DRAWN BY:	K. FRIEDLAND
DESIGNED BY:	W. LAMMER	CHECKED BY:	J. SALVATORI

BRIDGE 43N PRELIMINARY INFORMATION SHEE'

GENERAL

1. ALL MATERIALS AND CONSTRUCTION SHALL CONFORM TO THE VERMONT AGENCY OF TRANSPORTATION 2011 STANDARD SPECIFICATIONS FOR CONSTRUCTION, 2012 AASHTO LRFD BRIDGE DESIGN SPECIFICATIONS, AND THEIR LATEST REVISIONS.

2. ON-SITE WORK SHALL NOT OCCUR BETWEEN DECEMBER 1ST AND MARCH 23ST AS PER THE PROJECT SPECIAL PROVISIONS. DEPLOYMENT OF THE SMART WORK ZONE COMPONENTS MAY BE INITIATED PRIOR TO MARCH 23RD.

3. THE CONTRACTOR WILL BE ALLOWED TO CLOSE EACH BRIDGE FOR ONE WEEKEND (TWO CONSECUTIVE DAYS), BEGINNING ON A FRIDAY AT 6PM AND ENDING THE FOLLOWING MONDAY AT 6 AM, TO PERFORM REPLACEMENT OF THE EXISTING SUPERSTRUCTURE. DURING EACH BRIDGE CLOSURE PERIOD (BCP) THE CONTRACTOR WILL BE ALLOWED TO WORK 24 HOURS PER DAY. APPROVED CLOSURE DATES AND FURTHER INFORMATION & REQUIREMENTS ARE IDENTIFIED IN THE PROJECT SPECIAL PROVISIONS.

4. FOR INFORMATION REGARDING UTILITIES, SEE THE PROJECT SPECIAL PROVISIONS.

5. ALL DIMENSIONS SHOWN IN THE PLANS ARE HORIZONTAL OR VERTICAL AND ARE GIVEN AT 68 DEGREES FAHRENHEIT, UNLESS NOTED OTHERWISE

6. ALL PRECAST CONCRETE ELEMENTS ARE TO BE FABRICATED TO THE SPECIFIED DIMENSIONS WITHIN THE TOLERANCES DICTATED IN THE PRECAST/PRESTRESSED CONCRETE INSTITUTE TOLERANCE MANUAL FOR PRECAST AND PRESTRESSED CONCRETE CONSTRUCTION, MNL 135-00, AND ITS LATEST REVISIONS.

7. THE CONTRACTOR IS RESPONSIBLE FOR MAINTANANCE OF THE BRIDGES AND APPROACHES TO THE SATISFACTION OF THE ENGINEER ONCE THEY BEGIN ANY DEMOLITION/DECONSTRUCTION OF THE EXISTING BRIDGE OR ITS COMPONENTS PRIOR TO THE BRIDGE CLOSURE PERIOD. EXAMPLES OF SUCH ACTIVITIES INLCUDE, BUT ARE NOT LIMITED TO SAWCUTTING, PAVEMENT REMOVAL, AND EXCAVATION OF THE EXISTING ROADWAY SUBBASE.

8. ORIGINAL GROUND ELEVATIONS ARE BASED ON LIDAR DATA SUPPLEMENTED BY GROUND SURVEY ON AND BELOW THE EXISTING BRIDGES. THE CONTRACTOR SHALL VERIFY ALL EXISTING ELEVATIONS AND NOTIFY THE RESIDENT ENGINEER OF ANY DISCREPANCIES.

EARTHWORK AND RELATED ITEMS

9. REMOVAL OF THE EXISTING SUPERSTRUCTURES SHALL BE PAID FOR UNDER ITEM 529.20 "PARTIAL REMOVAL OF STRUCTURE (SUPERTRUCTURE 43S)" OR ITEM 529.20 "PARTIAL REMOVAL OF STRUCTURE (SUPERTRUCTURE 43N)" AS APPLICABLE.

10. REMOVAL OF THE EXISTING SUBSTRUCTURES TO THE ELEVATIONS SPECIFIED IN THE PLANS SHALL BE PAID FOR UNDER ITEM 529.20 "PARTIAL REMOVAL OF STRUCTURE (SUBSTRUCTURE 43S)" OR ITEM 529.20 "PARTIAL REMOVAL OF STRUCTURE (SUBSTRUCTURE 43N)" AS APPLICABLE.

11. THE COST OF BEDROCK EXCAVATION SHALL BE PAID UNDER ITEM 204.25,"STRUCTURE EXCAVATION". ALL OVERBREAKAGE SHALL BE REPLACED WITH "CONCRETE, CLASS C". A MAXIMUM OF 6 INCHES AVERAGE OVERBREAKAGE DEPTH SHALL BE PAID FOR. ANY ADDITIONAL BEDROCK EXCAVATION OR CONCRETE SHALL BE AT THE CONTRACTOR'S EXPENSE. REFER TO "TYPICAL EARTHWORK SECTION FOR ABUTMENT ON SPREAD FOOTING" ON SHEET "TYPICAL SECTIONS 2".

STRUCTURAL STEEL

12. THE EXISTING STRUCTURAL STEEL IS PAINTED WITH A MATERIAL THAT MAY CONTAIN LEAD. THE CONTRACTOR SHALL FOLLOW ALL APPLICABLE REGULATIONS WHEN HANDLING AND WORKING WITH THIS STEEL. THE REMOVED STRUCTURAL STEEL IS THE PROPERTY OF THE CONTRACTOR. THE CONTRACTOR SHALL INDEMNIFY AND HOLD THE STATE, ITS OFFICERS, AND EMPLOYEES HARMLESS CONCERNING THE CONTRACTOR'S USE OR DISPOSITION OF THE REMOVED EXISTING STRUCTURAL STEEL.

13. THE BOTTOM FLANGE OF THE GIRDERS FOR BRIDGE 43N SHALL CONFORM TO ASTM A709 GRADE HPS 70W AND SHALL BE PAID UNDER SPECIAL PROVISION (STRUCTURAL STEEL, PLATE GIRDER, GRADE HPS 70W). ALL OTHER STRUCTURAL STEEL SHALL CONFORM TO AASHTO M270/M270M GRADE 50W AND SHALL BE PAID FOR UNDER ITEM 506.55, "STRUCTURAL STEEL (PLATE GIRDER)".

14. STRUCTURAL STEEL MEMBERS DESIGNATED "CVN" IN THE PLANS SHALL BE CHARPY V-NOTCH TESTED IN ACCORDANCE WITH SUBSECTION 714.01 OF THE STANDARD SPECIFICATIONS.

15. ALL FIELD CONNECTIONS SHALL BE MADE USING 7/8 INCH DIAMETER HIGH-STRENGTH BOLTS. UNLESS OTHERWISE NOTED, HOLE DIAMETER SHALL BE 15/16 INCH. ANY CONNECTIONS NOT DESIGNATED SHALL BE DETAILED BY THE FABRICATOR AND SUBMITTED TO THE PROJECT MANAGER FOR APPROVAL.

16. AFTER THE GIRDERS HAVE BEEN ERECTED, ELEVATIONS SHALL BE TAKEN ALONG THE TOP OF THE GIRDERS AS DIRECTED BY THE RESIDENT ENGINEER, FOR USE IN DETERMINING HEIGHT OF DECK PANEL BEDDING STRIPS. AFTER THE DECK PANELS HAVE BEEN SET AND BEFORE THE GROUT BED IS PLACED, THE CONTRACTOR SHALL RE-PROFILE THE TOP FLANGES OF THE GIRDERS AS DIRECTED BY THE RESIDENT ENGINEER, FOR USE IN DETERMINING SCREED RAIL ELEVATIONS AND CHAIR HEIGHTS FOR REINFORCING STEEL.

17. FLEMING BRACKETS OR SIMILAR FALSEWORK SHALL BE PLACED AT A MAXIMUM SPACING OF 4 FEET. THE BRACKETS SHALL BEAR NEAR THE BOTTOM FLANGE AND IN NO CASE SHALL THEY BEAR ABOVE THE BOTTOM QUARTER OF THE WEB. THE DESIGN OF FALSEWORK SHALL BE THE RESPONSIBILITY OF THE CONTRACTOR.

18. ANY BOLT HOLES IN THE WEBS OF FASCIA GIRDERS NOT OTHERWISE FILLED SHALL BE FILLED WITH BUTTON HEAD OR HEX HEAD BOLTS. THE BOLTS SHALL BE TIGHTENED IN ACCORDANCE WITH SUBSECTION 506.19 OF THE STANDARD SPECIFICATIONS.

19. GIRDER WEBS AND DIAPHRAGMS SHALL BE PLUMB IN FINAL POSITION. GIRDER ENDS SHALL BE VERTICAL IN FINAL POSITION.

20. THE CONTRACTOR IS RESPONSIBLE FOR LOCATING THE BEARING STIFFENERS FOR THE LATERAL SLIDE SUPPORT.

CONCRETE

21. SUBSTRUCTURE CONCRETE SHALL BE HIGH PERFORMANCE CLASS B AND SHALL BE PAID FOR UNDER ITEM 501.34, "CONCRETE, HIGH PERFORMANCE CLASS B".

22. DECK (INCLUDING CURTAIN WALLS AND APPROACH SLAB BRACKETS) AND CURB CONCRETE SHALL BE HIGH PERFORMANCE CLASS A AND SHALL BE PAID FOR UNDER ITEM 501.33, "CONCRETE, HIGH PERFORMANCE CLASS A".

23. APPROACH SLABS SHALL BE PRECAST CONCRETE PAID FOR UNDER ITEM 900.645, (SPECIAL PROVISION CONTRACTOR-FABRICATED PRECAST CONCRETE STRUCTURE)(APPROACH SLAB #1)- (APPROACH SLAB #4) AS APPROPRIATE.

24. CONCRETE FOR SUBFOOTING SHALL BE PAID FOR UNDER ITEM 541.30, "CONCRETE, CLASS C". PAYMENT FOR SUBFOOTING CONCRETE WILL BE MADE ONLY FOR CONCRETE WITHIN THE LIMITS FOR SUBFOOTING SHOWN ON THE PLANS.

25. CONCRETE FOR THE PREFABRICATED APPROACH SLAB CLOSURE POURS SHALL MEET THE REQUIREMENTS OF ITEM 900.608 "SPECIAL PROVISION (HIGH PERFORMANCE CONCRETE, RAPID SET)".

26. SURFACES OF BRIDGE SEATS UNDER BEARING DEVICES SHALL BE LEVEL. ALL OTHER AREAS OF BRIDGE SEATS SHALL BE SLOPED 1/2 INCH PER FOOT TOWARDS MIDSPAN. THE ENTIRE BRIDGE SEAT SURFACE SHALL BE GIVEN A FLOAT FINISH.

27. CONCRETE PORTIONS OF ABUTMENTS AND WINGWALLS ABOVE ADJACENT BRIDGE SEAT ELEVATIONS SHALL NOT BE PLACED UNTIL FINISH GRADES HAVE BEEN DETERMINED BY THE RESIDENT ENGINEER.

28. THE DECK IS TO BE POURED IN ONE CONTINUOUS POUR WITH A MAXIMUM DURATION OF EIGHT HOURS. IF CIRCUMSTANCES BEYOND THE CONTRACTOR'S CONTROL PREVENT THIS FROM BEING ACCOMPLISHED, A TRANSVERSE CONSTRUCTION JOINT SHALL BE USED BETWEEN ADJACENT POURS. A MINIMUM 96 HOUR DELAY BETWEEN ADJACENT POURS SHALL BE OBSERVED.

29. THE MINIMUM APPROACH SLAB JOINT DESIGN STRENGTH IS 4,000 PSI, WHICH SHALL BE OBTAINED PRIOR TO LOADING THE APPROACH SLABS. (REFER TO SPECIAL PROVISIONS)

30. CORRUGATED POST-TENSIONING DUCTS IN THE PRECAST APPROACH SLABS FOR DOWEL CONNECTIONS SHALL BE CONSTRUCTED FROM EITHER POLYETHYLENE OR POLYPROPYLENE. THE DUCT SHALL HAVE A MINIMUM MATERIAL THICKNESS OF 0.080 IN. +/- 0.010 IN. AND SHALL HAVE A WHITE COATING ON THE OUTSIDE OR SHALL BE OF WHITE MATERIAL WITH ULTRAVIOLET STABILIZERS ADDED. POLYETHYLENE DUCT SHALL BE FABRICATED FROM RESINS MEETING OR EXCEEDING THE REQUIREMENTS OF ASTM D 3350 WITH A CELL CLASSIFICATION OF 345464A. POLY PROPYLENE DUCT SHALL BE FABRICATED FROM RESINS MEETING OR EXCEEDING THE REQUIREMENTS OF ASTM D 4101 WITH A CELL CLASSIFICATION RANGE OF PP0340B44544 TO PP0340B65884. ALL COSTS ASSOCIATED WITH PLACING THE DUCTS SHALL BE INCLUDED IN THE BID PRICE FOR EACH 900.645, "SPECIAL PROVISION, (CONTRACTOR-FABRICATED PRECAST CONCRETE STRUCTURE)" CONTRACT ITEM AS APPROPRIATE.

31. GROUT USED TO FILL CORRUGATED POST-TENSIONING DUCTS IN THE PRECAST APPROACH SLABS FOR DOWEL CONNECTIONS SHALL BE MORTAR, TYPE IV IN ACCORDANCE WITH SECTION 540 – PRECAST CONCRETE. ALL COSTS ASSOCIATED WITH PROVIDING AND PLACING GROUT FOR APPROACH SLAB DOWEL CONNECTIONS SHALL BE INCLUDED IN THE BID PRICE FOR ITEM 900.645, SPECIAL PROVISION (CONTRACTOR-FABRICATED PRECAST CONCRETE STRUCTURE)(APPROACH SLAB #1)- (APPROACH SLAB #4) AS APPROPRIATE.

32. WATER REPELLENT, SILANE SHALL BE APPLIED TO ALL EXPOSED CONCRETE SURFACES, EXCEPT THE UNDERSIDE OF THE DECK BETWEEN DRIP NOTCHES.

33. JOINTS AND SCORE MARKS IN CONCRETE SHALL BE CONSTRUCTED AS SHOWN IN THE PLANS OR AS DIRECTED BY THE RESIDENT ENGINEER.

34. THE KEY IN CONCRETE CONSTRUCTION JOINTS SHALL BE MONOLITHIC AND CONTINUOUS FOR THE FULL LENGTH OF THE JOINT.

35. ALL REINFORCING STEEL IN THE CAST IN PLACE CONCRETE DECK, BACKWALL, AND WINGWALLS ABOVE THE HORIZONTAL CONSTRUCTION JOINT SHALL MEET THE REQUIREMENTS FOR LEVEL III CORROSION RESISTANCE, AND BE PAID FOR UNDER ITEM 507.13, "REINFORCING STEEL, LEVEL III".

36. ALL REINFORCING STEEL IN THE BRIDGE RAILING SHALL MEET THE REQUIREMENTS FOR LEVEL III CORROSION RESISTANCE, AND BE INCLUDED IN THE UNIT PRICE FOR ITEM 525.70, "BRIDGE RAILING, CONCRETE F-SHAPE".

37. ALL REINFORCING STEEL IN THE PRECAST PRESTRESSED DECK PANELS SHALL MEET THE REQUIREMENTS FOR LEVEL III CORROSION RESISTANCE, AND BE INCLUDED IN THE UNIT PRICE FOR ITEM 900.670, SPECIAL PROVISION (PRECAST PRESTRESSED CONCRETE DECK PANEL)(3 ½").

38. ALL REINFORCING STEEL IN THE PRECAST APPROACH SLABS SHALL MEET THE REQUIREMENTS OF LEVEL II CORROSION RESISTANCE OR HIGHER, AND BE INCLUDED IN THE UNIT PRICE FOR ITEM 900.645, SPECIAL PROVISION (CONTRACTOR-FABRICATED PRECAST CONCRETE STRUCTURE)(APPROACH SLAB #1)- (APPROACH SLAB #4) AS APPROPRIATE.

39. ALL REINFORCING STEEL IN THE ABUTMENT FOOTINGS, STEM, WINGWALLS BELOW THE HORIZONTAL CONSTRUCTION JOINT, AND THE INDEPENDENT RETAINING WALLS SHALL MEET THE REQUIREMENTS FOR LEVEL I CORROSION RESISTANCE, AND BE PAID FOR UNDER ITEM 507.11, "REINFORCING STEEL, LEVEL I".

40. CUTTING AND REPAIRING DAMAGED AREAS OF COATED REINFORCING STEEL SHALL BE PERFORMED IN ACCORDANCE WITH SUBSECTION 507.04 OF THE STANDARD SPECIFICATIONS.

41. MINIMUM COVER FOR REINFORCING STEEL SHALL BE AS INDICATED IN THE PLANS.

42. REINFORCING STEEL PLACEMENT TOLERANCES SHALL BE:
    SPACING: +/- 1 INCH
    CLEARANCE: +/- 1/4 INCH

PRECAST PRESTRESSED DECK PANELS

43. DESIGN VALUES:
    a. CONCRETE COMPRESSIVE STRENGTH: f'c = 5 KSI
    b. CONCRETE COMPRESSIVE STRENGTH AT RELEASE: f'ci = 4 KSI
    c. PRESTRESSING STRANDS: 0.375 INCH DIAMETER, 270 KSI, LOW-RELAXATION 7-WIRE STRANDS
    d. JACKING FORCE PER PRESTRESSING STRAND = 17.2 KIPS
    e. ASSUMED MODULUS OF ELASTICITY FOR THE STRAND IS 28,500 KSI.

44. BEDDING STRIPS ACTING AS TEMPORARY SUPPORTS FOR THE PANELS SHALL BE CUT TO THE REQUIRED HEIGHT AFTER THE GIRDERS HAVE BEEN ERECTED AND PROFILED.

45. THE MINIMUM HEIGHT OF THE BEDDING STRIPS IS 1". IF THIS CANNOT BE MET, THE PROFILE GRADE MUST BE ADJUSTED.

46. BEDDING STRIPS SHALL BE HIGH-DENSITY EXTRUDED POLYSTYRENE WITH A MINIMUM COMPRESSIVE STRENGTH OF 60 PSI MEETING THE REQUIREMENTS OF SUBSECTION 735.01.

47. BEDDING STRIPS SHALL BE ATTACHED TO THE TOP FLANGE OF THE GIRDERS WITH AN APPROVED HIGH STRENGTH ADHESIVE. THE ADHESIVE SHALL BE ALLOWED TO CURE PER THE MANUFACTURER'S INSTRUCTIONS BEFORE SETTING PANELS.

48. TEMPORARY BRACING BETWEEN PANELS SHALL BE PROVIDED AS REQUIRED TO PREVENT PANEL MOVEMENT TRANSVERSE TO THE GIRDERS.

49. PANELS SHALL NOT BE USED TO SUPPORT HEAVY LOADS UNTIL THE FULL DECK IS CAST AND CURED.

50. THE GROUT BED SUPPORTING THE PANELS SHALL BE ALLOWED TO CURE FOR A MINIMUM OF 3 DAYS PRIOR TO PLACING THE CONCRETE DECK.

51. THE CONTRACTOR IS ADVISED THAT DURING THE PLACEMENT OF CONCRETE FOR THE TOP PORTION OF THE DECK, THE EXTERIOR GIRDERS MAY DEFLECT MORE THAN THE INTERIOR GIRDERS DUE TO THE PANEL DEAD LOAD DISTRIBUTION. ADJUSTMENTS TO THE SCREED MACHINE MAY BE NECESSARY TO ACCOUNT FOR THIS.

52. MORTAR, TYPE IV WITH EXPANSIVE ADDITIVES THAT REQUIRE ALL SURFACES TO BE CONFINED SHALL NOT BE USED FOR THE GROUT BEDS UNLESS THE CONTRACTOR PROVIDES A METHOD AND MEANS FOR CONFINEMENT THAT IS ACCEPTABLE TO THE ENGINEER.

53. IF THE CONTRACTOR ELECTS TO USE A TYPE IV MORTAR THAT IS NOT ON THE APPROVED PRODUCTS LIST OR OF THE STATED FORMULATION IN SECTION 707.03, THEN THE MIX MUST MEET 707.03 MORTAR, TYPE IV (c) PERFORMANCE REQUIREMENTS. SECTION 707.03(c)(2) MAY BE OMITTED IF THE MATERIAL WILL NOT HAVE DIRECT EXPOSURE TO MOISTURE IN FREEZE-THAW CONDITIONS. TESTING SHALL BE DONE BY AN INDEPENDENT LABORATORY ACCREDITED BY AMRL IN AASHTO T106 OR ASTM C109 AND IS CAPABLE OF PERFORMING ASTM C1090 AND AASHTO T106 (MODIFIED PER VAOT) OR ASTM C666 (MODIFIED PER VAOT). THE MIX SHALL BE TESTED AT THE MAXIMUM WATER/CEMENTIOUS RATIO.

54. ALL COSTS ASSOCIATED WITH PROVIDING AND PLACING BEDDING STRIPS AND MORTAR FOR GROUT BEDS SHALL BE INCLUDED IN THE BID PRICE FOR ITEM 900.670, SPECIAL PROVISION (PRECAST PRESTRESSED CONCRETE DECK PANEL)(3 ½").

GEOTECHNICAL INFORMATION

GEOTECHNICAL DESIGN PARAMETERS	SOIL	ROCK
NOMINAL BEARING RESISTANCE (KSF)	30.4	120.0
BEARING RESISTANCE FACTOR	0.45	0.45
RET. WALL FOUNDATION SOIL, UNIT WEIGHT (PCF)	125	---
RET. WALL FOUNDATION SOIL, FRICTION ANGLE (DEGREES)	40	---
GRANULAR BACKFILL FOR STRUCTURES, UNIT WEIGHT (PCF)	140	---
GRANULAR BACKFILL FOR STRUCTURES, FRICTION ANGLE (DEGREES)	34	---
EARTH PRESSURE COEFFICIENT, ACTIVE	0.28	---

SUBSTRUCTURES ON MICROPILES

55. ABUTMENTS #1 - #3 WILL BE CONSTRUCTED ON MICROPILES.

56. NO MICROPILE LOAD TESTING IS REQUIRED BASED ON THIS DESIGN.

57. THE MICORPILES SHALL BE TYPE A MICROPILES, GROUTED UNDER GRAVITY HEAD ONLY.

58. PLUNGE LENGTH, SEATING LENGTH AND UNCASED LENGTH SHALL BE IN COMPETENT ROCK.

59. THE BATTERED PILES SHALL INCLUDE A PLUNGE LENGTH. THIS PLUNGE LENGTH IS PART OF THE BOND ZONE. GROUT SHALL SURROUND THE CASING IN AN OVERSIZED HOLE FOR THE PLUNGE LENGTH.

60. GROUT SHALL HAVE A MINIMUM 28 DAY COMPRESSIVE STRENGTH OF 4500 PSI WHEN TESTED IN ACCORDANCE WITH AASHTO T106.

61. BEARING PLATES SHALL MEET THE REQUIREMENTS OF ASTM A709 GRADE 50.

62. THE #14 THREADED STEEL BAR SHALL HAVE A MINIMUM YIELD STRENGTH OF 75 KSI.

63. STATIC LOADS, SUCH AS FORMS, REINFORCING STEEL, OR OTHER MATERIALS NECESSARY FOR CONSTRUCTION, SHALL NOT BE PLACED ON THE MICROPILES UNTIL THE GROUT HAS OBTAINED A COMPRESSIVE STRENGTH OF 2000 PSI .

64. MICROPILE DESIGN VALUES:

	MAXIMUM FACTORED COMPRESSIVE AXIAL LOAD	
ABUTMENT	FRONT ROW (BATTERED)	BACK ROW (PLUMB)
ABUT 1	392 KIPS	128 KIPS
ABUT 2	503 KIPS	121 KIPS
ABUT 3	444 KIPS	179 KIPS

SUBSTRUCTURES ON BEDROCK

65. IT IS ANTICIPATED THAT BEDROCK WILL BE ENCOUNTERED AT ABUTMENT #4.

66. ABUTMENT #4 HAS BEEN DESIGNED FOR THE FOOTING ELEVATIONS SHOWN ON THE PLANS. THE INTENTION IS TO USE SUBFOOTINGS OF CONCRETE, CLASS "C" IN AREAS WHERE THE LEDGE IS MORE THAN 6 INCHES BELOW THE DESIGN BOTTOM OF FOOTING ELEVATIONS.

67. UPON COMPLETION OF THE EXCAVATION FOR SUBSTRUCTURES FOUNDED ON BEDROCK, AND PRIOR TO PLACING FORMWORK, THE RESIDENT ENGINEER SHALL NOTIFY PROJECT MANAGER AND THE VTRANS GEOLOGIST. THE SOILS AND FOUNDATION ENGINEER WILL DETERMINE IF THE BEDROCK IS COMPETENT TO OBTAIN THE NOMNAL BEARING RESISTANCE AS SHOWN ON THE PLANS. FIVE (5) WORKING DAYS FROM NOTICIFCATION SHALL BE ALLOWED TO MAKE THE INSPECTION AND THE DETERMINATION FOR THE COMPETENCY OF THE BEDROCK.

68. ONCE THE ELEVATION OF THE COMPETENT BEDROCK HAS BEEN DETERMINED, THE CONTRACTOR SHALL PROVIDE A BEDROCK PROFILE TO THE PROJECT MANAGER IN ORDER TO DETERMINE WHETHER THE DESIGN BOTTOM OF FOOTING ELEVATION SHALL BE LOWERED, AND WHETHER A SUBFOOTING SHALL BE REQUIRED. FOOTING ELEVATIONS SHALL NOT BE ADJUSTED WITHOUT APPROVAL OF THE PROJECT MANAGER. THREE (3) WORKING DAYS FROM RECEIPT OF THE BEDROCK PROFILE SHALL BE ALLOWED TO MAKE THIS DETERMINATION. NO WORK SHALL BE DONE ON THE FOOTINGS UNTIL A REPLY IS RECEIVED. THE MAXIMUM TOP OF FOOTING ELEVATION IS 548.00 FEET.

69. FOOTINGS OR SUBFOOTINGS FOR SUBSTRUCTURES FOUNDED ON BEDROCK SHALL BE PLACED ON CLEAN COMPETENT ROCK. ALL LOOSE ROCK AND DEBRIS SHALL BE REMOVED.

70. THE LIMITS OF ANY SUBFOOTING SHALL BE 1'-0" OUTSIDE OF THE HORIZONTAL LIMITS OF THE FOOTING. THE TOP SURFACE OF THE SUBFOOTING SHALL BE INTENTIONALLY ROUGHENED TO 1 / 4" AMPLITUDE TO HELP PREVENT SLIDING AT THE SUBFOOTING/FOOTING INTERFACE.

71. DOWELS SHALL BE DRILLED AND GROUTED INTO BEDROCK AS SHOWN ON THE PLANS. THE DOWELS SHALL HAVE A 2'-0" MINIMUM EMBEDMENT INTO COMPETENT BEDROCK AND SHALL EXTEND INTO THE FOOTING A MINIMUM OF 1'-6". IF A SUBFOOTING IS REQUIRED THE DOWELS SHALL EXTEND THROUGH THE SUBFOOTING INTO THE FOOTING. THE DOWELS SHALL MEET THE REQUIREMENTS FOR LEVEL III CORROSION RESISTANCE, AND BE PAID FOR UNDER ITEM 507.13, "REINFORCING STEEL, LEVEL III". VTRANS WILL PAY FOR 2 LINEAR FEET OF DRILLING AND GROUTING INTO BEDROCK AT EACH DOWEL LOCATION. IF THE CONTRACTOR ELECTS TO DRILL THE DOWELS THROUGH THE SUBFOOTING, IT WILL BE AT THEIR OWN EXPENSE.

72. ANY CONCRETE REQUIRED FOR SUBFOOTINGS SHALL BE PAID FOR AS ITEM 541.30 "CONCRETE, CLASS C". AN ESTIMATED QUANTITY OF CLASS C CONCRETE HAS BEEN INCLUDED IN THESE PLANS.

TRAFFIC CONTROL

73. THE CONTRACTOR SHALL BE RESPONSIBLE FOR SUPPLYING A SITE SPECIFIC TRAFFIC CONTROL PACKAGE IDENTIFYING CONSTRUCTION ACTIVITIES BEFORE, DURING, AND AFTER THE BRIDGE CLOSURE PERIOD. THE CONTRACTOR SHALL SUBMIT A DETAILED TRAFFIC CONTROL PLAN TO THE ENGINEER FOR ALL STAGES OF CONSTRUCTION, FOR APPROVAL PER SUBSECTION 105.03. ALL COSTS SHALL BE INCLUDED IN ITEM 641.10 "TRAFFIC CONTROL (I-91 NORTHBOUND)", ITEM 641.10 "TRAFFIC CONTROL (I-91 SOUTHBOUND)" AND ITEM 641.10 "TRAFFIC CONTROL (US RT 5)".

74. ALL ITEMS REQUIRED TO IMPLEMENT THE CONTRACTOR'S TRAFFIC CONTROL PLAN WILL NOT BE PAID FOR DIRECTLY BUT WILL BE CONSIDERED INCLUDED IN THE BID PRICE FOR ITEM 641.10 "TRAFFIC CONTROL (I-91 NORTHBOUND)", ITEM 641.10 "TRAFFIC CONTROL (I-91 SOUTHBOUND)" AND ITEM 641.10 "TRAFFIC CONTROL (US RT 5)". THOSE ITEMS ARE BUT NOT LIMITED TO:

- TYPE III BARRICADES
- TYPE III BARRICADES (MOD.)
- RETROREFLECTIVE PLASTIC DRUMS
- TRAFFIC CONES
- TEMPORARY PAVEMENT MARKINGS
- PAVEMENT MARKING REMOVAL
- TRAFFIC SIGNS, TYPE A
- SQUARE TUBE SIGN POST AND ANCHOR
- CHANNELIZING DEVICES
- ENERGY ABSORPTION ATTENUATOR
- SOLID BARRIER FENCE

75. ALL SIGNING SHALL BE IN ACCORDANCE WITH THE LATEST EDITION OF THE MUTCD. FOR ADDITIONAL SIGNING INSTRUCTIONS SEE THE T SERIES OF THE STANDARDS. WHERE CONFLICTS EXIST, THE MUTCD SHALL GOVERN.

76. THE CONTRACTOR SHALL ERECT AND MAINTAIN ALL TEMPORARY ON AND OFF PROJECT SIGNS AND TRAFFIC CONTROL DEVICES AS SHOWN IN THE PLANS AND DIRECTED BY THE ENGINEER. PAYMENT FOR THIS WORK SHALL BE CONSIDERED INCIDENTAL TO ITEM 641.10 "TRAFFIC CONTROL (I-91 NORTHBOUND)", ITEM 641.10 "TRAFFIC CONTROL (I-91 SOUTHBOUND)" AND ITEM 641.10 "TRAFFIC CONTROL (US RT 5)".

77. FULL ACCESS TO ALL SIDE ROAD AND DRIVES WITHIN THE PROJECT LIMITS SHALL BE MAINTAINED AT ALL TIMES. THIS WORK SHALL BE CONSIDERED INCIDENTAL TO ITEM 641.10 "TRAFFIC CONTROL (US RT 5)".

78. THE QUANTITY OF ITEM 621.90 TEMPORARY TRAFFIC BARRIER WAS CALCULATED BASED ON THE MAXIMUM AMOUNT OF BARRIER NECESSARY AT ANY ONE TIME DURING THE PROJECT DURATION. RE-USE OF THIS BARRIER FOR SUBSEQUENT PHASES OF CONSTRUCTION SHALL BE PAID AS ITEM 621.95 "REMOVE AND RESET TEMPORARY TRAFFIC BARRIER".

79. CONTINGENCY PLANS ARE PROVIDED IN THE TRANSPORTATION MANAGEMENT PLAN. IN THE EVENT OF AN INCIDENT IN THE WORK ZONE, THE CONTRACTOR SHALL IMPLEMENT THE APPROPRIATE CONTINGENCY PLAN WITHIN 30 MINUTES OF THE INCIDENT. ALL ITEMS ASSOCIATED WITH THE CONTINGENCY PLAN WILL BE PAID UNDER THE APPROPRIATE TRAFFIC CONTROL ITEM.

80. DURING EACH BRIDGE BCP A TOW TRUCK WILL BE ONSITE TO IMMEDIATELY REMOVE ANY DISABLED VEHICLES WITHIN THE PROJECT AREA. ALL COSTS SHALL BE INCLUDED IN ITEMS 641.10 TRAFFIC CONTROL (I-91 NORTHBOUND) AND TRAFFIC CONTROL (I-91 SOUTHBOUND)

81. A UTO SHALL BE STATIONED AT THE VA MEDICAL CENTER ENTRANCE (VETERANS DRIVE) AND US 5 WEEKDAYS FROM 4:00PM TO 5:00PM FOR THE DURATION OF THE PROJECT OR AS DIRECTED BY THE ENGINEER.

82. A UTO SHALL BE STATIONED AT THE INTERSECTION OF I-91 NORTHBOUND RAMPS AND US5 DURING THE DAYLIGHT HOURS FOR THE DURATION OF THE PROJECT OR AS DIRECTED BY THE ENGINEER.

83. SEE SPECIAL PROVISIONS FOR RESTRICTIONS ON TRAFFIC DELAYS.

84. A SOLID BARRIER FENCE SHALL BE INSTALLED DIRECTLY ON TOP OF THE TEMPORARY BARRIER ON EITHER SIDE OF US 5. THE FENCE SHALL HAVE A MINIMUM HEIGHT OF 6'-0".THIS WORK SHALL BE CONSIDERED INCIDENTAL TO ITEM 641.10 "TRAFFIC CONTROL (US RT 5)".

PEDESTRIAN TRAFFIC CONTROL

85. THE CONTRACTOR SHALL PROTECT PEDESTRIAN THROUGH MOVEMENTS FROM ONE END OF THE CONSTRUCTION AREA TO THE OTHER, ON AT LEAST ONE SIDE OF US 5 DURING CONSTRUCTION ALL TIMES WITH THE EXCEPTION OF EACH BCP. ALL COSTS SHALL BE INCLUDED IN ITEM 900.645, "SPECIAL PROVISION (PUBLIC PROTECTION FOR BRIDGE PROJECTS)".

86. THE SITE SPECIFIC TRAFFIC CONTROL PLANS FOR US 5 WILL INCLUDE ALL SIGNAGE FOR PEDESTRIAN MOBILITY. THIS WORK SHALL BE CONSIDERED INCIDENTAL TO ITEM 641.10 "TRAFFIC CONTROL (US RT 5)".

87. MAXIMUM PEDESTRIAN MOBILITY DELAYS SHALL BE AS IDENTIFIED IN THE SPECIAL PROVISIONS FOR TEMPORARY TRAFFIC DELAYS.

88. DURING EACH BCP, A SHUTTLE SHALL TRANSPORT PEDESTRIANS THRU THE WORK ZONE. THIS WORK SHALL BE PAID FOR UNDER ITEM 900.650 SPECIAL PROVISION (PEDESTRIAN SHUTTLE)(N.A.B.I.).

TEMPORARY TRAFFIC SIGNALS

89. THE BURN IN TIME FOR THE TEMPORARY SIGNALS SHALL BE REDUCED TO A WEEKEND FROM FRIDAY 6PM TO MONDAY 6AM. PCMS SHALL BE PLACED PRIOR TO SIGNALS DURING THE BURN IN TIME WARNING THE TRAVELLING PUBLIC.

90. ALL MATERIALS AND CONSTRUCTION SHALL CONFORM TO THE STATE OF VERMONT AGENCY OF TRANSPORTATION'S (VTrans) "STANDARD SPECIFICATIONS FOR CONSTRUCTION", DATED 2011, WITH CURRENT MODIFICATIONS.

91. TEMPORARY TRAFFIC SIGNAL SYSTEM SHALL BE DESIGNED AND INSTALLED IN ACCORDANCE WITH CONTRACT ITEM 678.40 – TEMPORARY TRAFFIC SIGNAL SYSTEM.

92. DESIGN OF THE SIGNAL SUPPORTS AND ANY REQUIRED GUYING SHALL BE THE RESPONSIBILITY OF THE CONTRACTOR.

93. SIGNAL FACES SHALL BE L.E.D AND CONSIST OF 12" LENSES (RED, YELLOW AND GREEN).

94. THE BOTTOM OF THE HOUSING OF A SIGNAL FACE SUSPENDED OVER A ROADWAY SHALL NOT BE LESS THAN 16.5 FEET NOR MORE THAN 19.0 FEET ABOVE THE PAVEMENT GRADE AT THE CENTER OF THE ROADWAY. THE BOTTOM OF A SIGNAL FACE NOT MOUNTED OVER A ROADWAY SHALL NOT BE LESS THAN 8.0 FEET NOR MORE THAN 15.0 FEET ABOVE THE GROUND. CAUTION SHOULD BE USED TO ENSURE COMPLIANCE WITH THE HEIGHT REQUIREMENTS IN THE EVENT THE NEW APPROACH GRADES DIFFER SIGNIFICANTLY FROM THE OLD ROADWAY GRADE.

95. SIGNAL FACES FOR ANY ONE APPROACH SHALL NOT BE LESS THAN 8 FEET APART MEASURED HORIZONTALLY BETWEEN CENTER FACES.

96. SIGNAL HEADS MAY BE HUNG ON A SPAN WIRE OR ON A CANTILEVER MAST ARM. AT LEAST ONE SIGNAL HEAD SHALL BE UNMISTAKABLY IN LINE WITH THE CENTER OF APPROACHING TRAFFIC AT ALL TIMES. THE SECOND SIGNAL HEAD MAY BE POST MOUNTED, LOCATED AT A DISTANCE OF 14.5 FEET FROM THE CENTER OF THE APPROACH LANE WHEN THE STOP BAR IS 40 FEET FROM THE SIGNAL HEAD. CONSULT THE LATEST EDITION OF THE MUTCD FOR ADDITIONAL INFORMATION CONCERNING SIGNAL PLACEMENT.

97. SIGNAL HEAD PLACEMENT IS CRITICAL. HEADS SHALL BE ADJUSTED TO REFLECT LANE LOCATION CHANGES.

98. THE SIGNAL SYSTEM SHALL CONSIST OF POLES, SIGNS AND POSTS, WARNING SIGNS, LUMINAIRES, FLASHING BEACONS, ASSOCIATED PAVEMENT MARKINGS AND SIGNAL EQUIPMENT TO PROVIDE FOR AN ADEQUATE DESIGN. IT ALSO INCLUDES PERMITS AND COSTS ASSOCIATED WITH PROVIDING ELECTRICAL POWER.

99. INSTALL WIRING BETWEEN SIGNAL POLES TO PROVIDE FOR A SAFE INSTALLATION. ATTACHMENT TO UTILITY POLES SHALL BE COORDINATED BY THE CONTRACTOR WITH THE UTILITY COMPANY.

100. PLACE TEMPORARY POLES BEHIND GUARDRAIL OR OUTSIDE OF THE CLEAR ZONE.

101. POLES SUPPORTING SPAN WIRES AND/OR MAST ARMS SHALL BE ADEQUATELY BRACED OR GUYED AND SHALL NOT BE PLACED SO AS TO CREATE A HAZARD TO THE TRAVELING PUBLIC.

102. THE GPS TIME CLOCK INSTALLED AT THE INTERSECTION OF US RT 5 AND SYKES AVE SHALL REMAIN IN PLACE AFTER THE PROJECT IS COMPLETED. THIS WORK SHALL BE INCLUDED IN THE BID PRICE FOR ITEM 900.620 “SPECIAL PROVISION (GPS TIME CLOCK)”.

MISCELLANEOUS

103. EXISTING CONDITIONS SHEET HAS BEEN INCLUDED FOR THE CONTRACTOR TO USE FOR SUBMITTALS.

STATE OF VERMONT
AGENCY OF TRANSPORTATION

QUANTITY SHEET 1

SUMMARY OF ESTIMATED QUANTITIES										TOTALS		DESCRIPTIONS			
ROADWAY 91S	TRAINING	EROSION CONTROL	BRIDGE 43S	FULL C.E. ITEMS	ROADWAY 91N	BRIDGE 43N	ROADWAY RT 5	ROADWAY COMMON		GRAND TOTAL	FINAL	UNIT	ITEMS	ITEM NUMBER	ROUND
1										1		LS	CLEARING AND GRUBBING, INCLUDING INDIVIDUAL TREES AND STUMPS	201.10	
550					600		1410			2560		CY	COMMON EXCAVATION	203.15	
							240			240		CY	SOLID ROCK EXCAVATION	203.16	
300										300		CY	EXCAVATION OF SURFACES AND PAVEMENTS	203.28	
							70			70		CY	SAND BORROW	203.31	
710					630		430			1770		CY	GRANULAR BORROW	203.32	
					25					25		CY	TRENCH EXCAVATION OF EARTH	204.20	
10					12					22		CY	TRENCH EXCAVATION OF ROCK	204.21	
1										1		CY	TRENCH EXCAVATION OF EARTH, EXPLORATORY (N.A.B.I.)	204.22	
						731.2				731.2		CY	STRUCTURE EXCAVATION (ABUTMENT #4)	204.25	
			1517.7			433.6				1951.3		CY	STRUCTURE EXCAVATION (ABUTMENTS #1- #3)	204.25	
			1305.4		15	1058.7				2379.1		CY	GRANULAR BACKFILL FOR STRUCTURES	204.30	
1000					800		8260			10060		SY	COLD PLANING, BITUMINOUS PAVEMENT	210.10	
190					700					890		LF	MILLED RUMBLE STRIPS	213.10	
960					1050		230			2240		CY	SUBBASE OF DENSE GRADED CRUSHED STONE	301.35	
50					85					135		CY	AGGREGATE SHOULDERS, IN PLACE	402.10	
16					13		60			89		CWT	EMULSIFIED ASPHALT	404.65	
								1		1		LU	PRICE ADJUSTMENT, ASPHALT CEMENT (N.A.B.I.)	406.50	
820					670		1000			2490		TON	SUPERPAVE BITUMINOUS CONCRETE PAVEMENT	490.30	
								1		1		LU	AIR VOIDS PAY ADJUSTMENT (N.A.B.I.)	490.31	
								1		1		LU	MAT DENSITY PAY ADJUSTMENT (N.A.B.I.)	490.32	
			193			177				370		CY	CONCRETE, HIGH PERFORMANCE CLASS A	501.33	
			800			695				1495		CY	CONCRETE, HIGH PERFORMANCE CLASS B	501.34	
						34682				34682		LB	STRUCTURAL STEEL, ROLLED BEAM (W30x90 DIAPHRAGM)	506.50	
			45832							45832		LB	STRUCTURAL STEEL, ROLLED BEAM (W40 x 149 DIAPHRAGM)	506.50	
			229060			139240				368300		LB	STRUCTURAL STEEL, PLATE GIRDER	506.55	
			73436			60744				134180		LB	REINFORCING STEEL, LEVEL I	507.11	
			63317			60310				123627		LB	REINFORCING STEEL, LEVEL III	507.13	
						144				144		LF	DRILLING AND GROUTING DOWELS	507.16	
			100			100				200		EACH	MECHANICAL BAR CONNECTOR	507.19	
			1							1		LS	SHEAR CONNECTORS (2634 EA. - 7/8" X 7")(BRIDGE 43S)	508.15	
						1				1		LS	SHEAR CONNECTORS (3072 EA. - 7/8" X 7")(BRIDGE 43N)	508.15	
			686			656				1342		SY	LONGITUDINAL DECK GROOVING	509.10	
			96			99				195		GAL	WATER REPELLENT, SILANE	514.10	
			100			95				195		LF	BRIDGE EXPANSION JOINT, ASPHALTIC PLUG	516.10	
			100			95				195		LF	JOINT SEALER, HOT POURED	524.11	
			277			277				554		LF	BRIDGE RAILING, CONCRETE F-SHAPE	525.70	
						1				1		EACH	PARTIAL REMOVAL OF STRUCTURE (SUBSTRUCTURE 43N)	529.20	
			1							1		EACH	PARTIAL REMOVAL OF STRUCTURE (SUBSTRUCTURE 43S)	529.20	
						1				1		EACH	PARTIAL REMOVAL OF STRUCTURE (SUPERSTRUCTURE 43N)	529.20	

DETAILED SUMMARY OF QUANTITIES

QUANTITIES	UNIT	ITEMS
		TRAFFIC CONTROL (I-91 NORTHBOUND)
288	SF	TRAFFIC SIGNS, TYPE A
540	LF	SQUARE TUBE SIGN POST AND ANCHOR
1700	LF	TEMPORARY 6 INCH WHITE LINE
1350	LF	TEMPORARY 6 INCH YELLOW LINE
2700	LF	PAVEMENT MARKING MASK
110	TON	TEMPORARY PAVEMENT
250	CY	COMMON EXCAVATION
225	CY	SUBBASE OF DENSE GRADED CRUSHED STONE
370	LF	GRANITE SLOPE EDGING
5	EA	DELINEATOR WITH STEEL POST
5	EA	REMOVAL OF EXISTING DELINEATOR
		TRAFFIC CONTROL (I-91 SOUTHBOUND)
900	SF	TRAFFIC SIGNS, TYPE A
1450	LF	SQUARE TUBE SIGN POST AND ANCHOR
		TRAFFIC CONTROL (US RT 5)
260	SF	TRAFFIC SIGNS, TYPE A
570	LF	SQUARE TUBE SIGN POST AND ANCHOR
3200	LF	TEMPORARY 4 INCH WHITE LINE
2625	LF	TEMPORARY 4 INCH YELLOW LINE
560	LF	TEMPORARY 8 INCH WHITE LINE
150	LF	TEMPORARY 24 INCH STOP BAR
26	EA	TEMPORARY LETTER OR SYMBOL
850	LF	REMOVAL OF EXISTING PAVEMENT MARKINGS

PROJECT NAME: HARTFORD
PROJECT NUMBER: IM 091-2(79)

FILE NAME: s12a132qs.dgn
PROJECT LEADER: K. HIGGINS
DESIGNED BY: W. LAMMER
QUANTITY SHEET 1

PLOT DATE: 15-DEC-2014
DRAWN BY: K. FRIEDLAND
CHECKED BY: J. SALVATORI
SHEET 7 OF 166

STATE OF VERMONT
AGENCY OF TRANSPORTATION

QUANTITY SHEET 2

SUMMARY OF ESTIMATED QUANTITIES										TOTALS		DESCRIPTIONS			
ROADWAY 91S	TRAINING	EROSION CONTROL	BRIDGE 43S	FULL C.E. ITEMS	ROADWAY 91N	BRIDGE 43N	ROADWAY RT 5	ROADWAY COMMON		GRAND TOTAL	FINAL	UNIT	ITEMS	ITEM NUMBER	ROUND
			1							1		EACH	PARTIAL REMOVAL OF STRUCTURE (SUPERSTRUCTURE 43S)	529.20	
			12			12				24		EACH	BEARING DEVICE ASSEMBLY, ELASTOMERIC PAD W/ EXT. LOAD PLATES	531.18	
						50				50		CY	CONCRETE, CLASS C	541.30	
													BEGIN OPTION AA		
					30					30		LF	18" CSP .064 (2-2/3 X 1/2)	601.0015	
					30					30		LF	18" CAAP .060 (2-2/3 X 1/2)	601.0215	
					30					30		LF	18" PCCSP .079 (2-2/3 X 1/2)	601.0416	
					30					30		LF	18" RCP CLASS III	601.0815	
					30					30		LF	18" CPEP	601.0915	
					30					30		LF	18" CPPP (SL)	601.2815	
													END OPTION AA		
					1					1		EACH	PRECAST REINFORCED CONCRETE DROP INLET WITH CAST IRON GRATE	604.18	
1							1			2		EACH	CHANGING ELEVATION OF DROP INLETS, CATCH BASINS, OR MANHOLES	604.40	
							1			1		EACH	CAST IRON COVER WITH FRAME	604.55	
		280								280		MGAL	DUST CONTROL WITH WATER	609.10	
		2								2		TON	DUST AND ICE CONTROL WITH CALCIUM CHLORIDE	609.15	
90					2					92		CY	STONE FILL, TYPE II	613.11	
							648			648		LF	GRANITE SLOPE EDGING	616.20	
							362			362		LF	VERTICAL GRANITE CURB	616.21	
58					48					106		LF	BITUMINOUS CONCRETE CURB, TYPE A	616.305	
4					2		5			11		EACH	STEEL MARKER POSTS	619.16	
							90			90		LF	REMOVING AND RESETTING FENCE	620.50	
389.5					564.5					954		LF	STEEL BEAM GUARDRAIL, GALVANIZED	621.20	
					58					58		LF	STEEL BEAM GUARDRAIL, GALVANIZED W/8 FEET POSTS	621.205	
					1					1		EACH	MANUFACTURED TERMINAL SECTION, FLARED	621.50	
1					5					6		EACH	ANCHOR FOR STEEL BEAM RAIL	621.60	
4					4					8		EACH	GUARDRAIL APPROACH SECTION TO CONCRETE BRIDGE RAILING, TL-3	621.747	
100					75					175		LF	REMOVE AND RESET GUARDRAIL	621.75	
375					650		300			1325		LF	REMOVAL AND DISPOSAL OF GUARDRAIL	621.80	
					1310		1600			2910		LF	TEMPORARY TRAFFIC BARRIER	621.90	
810										810		LF	REMOVE AND RESET TEMPORARY TRAFFIC BARRIER	621.95	
2250					2250					4500		HR	FLAGGERS	630.15	
				1						1		LS	FIELD OFFICE, ENGINEERS	631.10	
				1						1		LS	TESTING EQUIPMENT, CONCRETE	631.16	
				1						1		LS	TESTING EQUIPMENT, BITUMINOUS	631.17	
				5000						5000		DL	FIELD OFFICE TELEPHONE (N.A.B.I.)	631.26	
	1040									1040		HR	EMPLOYEE TRAINEESHIP	634.10	
								1		1		LS	MOBILIZATION/DEMOBILIZATION	635.11	
					1					1		LS	TRAFFIC CONTROL (I-91 NORTHBOUND)	641.10	
1										1		LS	TRAFFIC CONTROL (I-91 SOUTHBOUND)	641.10	

DETAILED SUMMARY OF QUANTITIES

QUANTITIES	UNIT	ITEMS

PROJECT NAME: HARTFORD
PROJECT NUMBER: IM 091-2(79)

FILE NAME: s12a132qs.dgn
PROJECT LEADER: K. HIGGINS
DESIGNED BY: W. LAMMER
QUANTITY SHEET 2

PLOT DATE: 15-DEC-2014
DRAWN BY: K. FRIEDLAND
CHECKED BY: J. SALVATORI
SHEET 8 OF 166

STATE OF VERMONT
AGENCY OF TRANSPORTATION

QUANTITY SHEET 3

SUMMARY OF ESTIMATED QUANTITIES									TOTALS		DESCRIPTIONS			
ROADWAY 91S	TRAINING	EROSION CONTROL	BRIDGE 43S	FULL C.E. ITEMS	ROADWAY 91N	BRIDGE 43N	ROADWAY RT 5	ROADWAY COMMON	GRAND TOTAL	FINAL	UNIT	ITEMS	ITEM NUMBER	ROUND
							1		1		LS	TRAFFIC CONTROL (US RT 5)	641.10	
2					2		2		6		EACH	PORTABLE CHANGEABLE MESSAGE SIGN	641.15	
							3750		3750		LF	DURABLE 4 INCH WHITE LINE, POLYUREA	646.404	
							4040		4040		LF	DURABLE 4 INCH YELLOW LINE, POLYUREA	646.414	
861					654				1515		LF	DURABLE 6 INCH WHITE LINE, RECESSED POLYUREA	646.426	
550					528				1078		LF	DURABLE 6 INCH YELLOW LINE, RECESSED POLYUREA	646.436	
							835		835		LF	DURABLE 8 INCH WHITE LINE, POLYUREA	646.444	
							500		500		LF	DURABLE 8 INCH YELLOW LINE, POLYUREA	646.454	
50									50		LF	DURABLE 12 INCH WHITE LINE, RECESSED POLYUREA	646.466	
							60		60		LF	DURABLE 24 INCH STOP BAR, POLYUREA	646.484	
							49		49		EACH	DURABLE LETTER OR SYMBOL, POLYUREA	646.494	
825					800				1625		SY	GEOTEXTILE FOR ROADBED SEPARATOR	649.11	
180					3				183		SY	GEOTEXTILE UNDER STONE FILL	649.31	
		1600							1600		SY	GEOTEXTILE FOR SILT FENCE	649.51	
		105							105		LB	SEED	651.15	
		860							860		LB	FERTILIZER	651.18	
		4							4		TON	AGRICULTURAL LIMESTONE	651.20	
		4							4		TON	HAY MULCH	651.25	
		930							930		CY	TOPSOIL	651.35	
		1							1		LS	EPSC PLAN	652.10	
		200							200		HR	MONITORING EPSC PLAN	652.20	
		1							1		LU	MAINTENANCE OF EPSC PLAN (N.A.B.I.)	652.30	
		1425							1425		SY	TEMPORARY EROSION MATTING	653.20	
		20							20		CY	TEMPORARY STONE CHECK DAM, TYPE I	653.25	
		200							200		CY	VEHICLE TRACKING PAD	653.35	
		11							11		EACH	INLET PROTECTION DEVICE, TYPE I	653.40	
		3925							3925		LF	BARRIER FENCE	653.50	
4.66					4.66		68.63		77.95		SF	TRAFFIC SIGNS, TYPE A	675.20	
24					24		135		183		LF	SQUARE TUBE SIGN POST AND ANCHOR	675.341	
6					3		25		34		EACH	REMOVING SIGNS	675.50	
							8		8		EACH	ERECTING SALVAGED SIGNS	675.60	
					2				2		EACH	DELINEATOR WITH STEEL POST (BLUE)	676.10	
1					1				2		EACH	DELINEATOR WITH STEEL POST (GREEN)	676.10	
2					2				4		EACH	DELINEATOR WITH STEEL POST (YELLOW)	676.10	
2					3		6		11		EACH	REMOVAL OF EXISTING DELINEATOR	676.12	
							1		1		EACH	REMOVE AND RESET OVERHEAD TRAFFIC SIGN SUPPORT	677.25	
							2		2		EACH	TEMPORARY TRAFFIC SIGNAL SYSTEM	678.40	
							1		1		EACH	REMOVING AND RESETTING LIGHT POLE	679.25	
								1	1		LU	PRICE ADJUSTMENT, FUEL (N.A.B.I.)	690.50	
			2			2			4		CY	SPECIAL PROVISION (HIGH PERFORMANCE CONCRETE, RAPID SET)(FPQ)	900.608	

DETAILED SUMMARY OF QUANTITIES

QUANTITIES	UNIT	ITEMS

PROJECT NAME: HARTFORD
PROJECT NUMBER: IM 091-2(79)

FILE NAME: s12a132qs.dgn
PROJECT LEADER: K. HIGGINS
DESIGNED BY: W. LAMMER
QUANTITY SHEET 3

PLOT DATE: 15-DEC-2014
DRAWN BY: K. FRIEDLAND
CHECKED BY: J. SALVATORI
SHEET 9 OF 166

STATE OF VERMONT
AGENCY OF TRANSPORTATION

QUANTITY SHEET 4

SUMMARY OF ESTIMATED QUANTITIES								TOTALS		DESCRIPTIONS			
ROADWAY 91S	TRAINING	EROSION CONTROL	BRIDGE 43S	FULL C.E. ITEMS	ROADWAY 91N	BRIDGE 43N	ROADWAY RT 5	ROADWAY COMMON	GRAND TOTAL	FINAL	UNIT	ITEMS	ITEM NUMBER	ROUND
						50000			50000		DL	SPECIAL PROVISION (INCENTIVE/DISINCENTIVE)(N.A.B.I.)(BRIDGE 43N)	900.615	
			50000						50000		DL	SPECIAL PROVISION (INCENTIVE/DISINCENTIVE)(N.A.B.I.)(BRIDGE 43S)	900.615	
							8625		8625		DL	SPECIAL PROVISION (PEDESTRIAN SHUTTLE)(N.A.B.I)	900.615	
110000					110000				220000		DL	SPECIAL PROVISION (UNIFORMED TRAFFIC OFFICERS)	900.615	
				8					8		EACH	SPECIAL PROVISION (CPM SCHEDULE)	900.620	
							1		1		EACH	SPECIAL PROVISION (GPS TIME CLOCK)	900.620	
			1			1			2		EACH	SPECIAL PROVISION (TEMPORARY SUPPORTS AND HORIZONTAL SLIDE)	900.620	
5					5				10		HR	SPECIAL PROVISION (JET DRYER)	900.630	
			20			20			40		HR	SPECIAL PROVISION (UNEXPECTED OBSTRUCTION DRILLING)	900.630	
						88470			88470		LB	SPECIAL PROVISION (STRUCTURAL STEEL, PLATE GIRDER, GRADE HPS 70W)	900.635	
			960			450			1410		LF	SPECIAL PROVISION (MICROPILE, CASED)(9.625")	900.640	
			235			95			330		LF	SPECIAL PROVISION (MICROPILE, UNCASED)(8.535")	900.640	
			1						1		LS	SPECIAL PROVISION (CONTRACTOR-FABRICATED PRECAST CONCRETE STRUCTURE)(APPROACH SLAB #1)	900.645	
			1						1		LS	SPECIAL PROVISION (CONTRACTOR-FABRICATED PRECAST CONCRETE STRUCTURE)(APPROACH SLAB #2)	900.645	
						1			1		LS	SPECIAL PROVISION (CONTRACTOR-FABRICATED PRECAST CONCRETE STRUCTURE)(APPROACH SLAB #3)	900.645	
						1			1		LS	SPECIAL PROVISION (CONTRACTOR-FABRICATED PRECAST CONCRETE STRUCTURE)(APPROACH SLAB #4)	900.645	
						1			1		LS	SPECIAL PROVISION (CPM SCHEDULE)(BRIDGE 43N)	900.645	
			1						1		LS	SPECIAL PROVISION (CPM SCHEDULE)(BRIDGE 43S)	900.645	
			1						1		LS	SPECIAL PROVISION (FURNISHING EQUIPMENT FOR INSTALLING MICROPILES)	900.645	
			1						1		LS	SPECIAL PROVISION (PUBLIC PROTECTION FOR BRIDGE PROJECTS)	900.645	
							1		1		LS	SPECIAL PROVISION (SMART WORK ZONE)	900.645	
			4402			4260			8662		SF	SPECIAL PROVISION (PRECAST PRESTRESSED CONCRETE DECK PANEL)(3 1/2")	900.670	

DETAILED SUMMARY OF QUANTITIES		
QUANTITIES	UNIT	ITEMS

PROJECT NAME: HARTFORD
PROJECT NUMBER: IM 091-2(79)

FILE NAME: s12a132qs.dgn
PROJECT LEADER: K. HIGGINS
DESIGNED BY: W. LAMMER
QUANTITY SHEET 4

PLOT DATE: 15-DEC-2014
DRAWN BY: K. FRIEDLAND
CHECKED BY: J. SALVATORI
SHEET 10 OF 166

STATE OF VERMONT
AGENCY OF TRANSPORTATION

BRIDGE QUANTITY SHEET 1

SUMMARY OF BRIDGE QUANTITIES									TOTALS	DESCRIPTIONS			DETAILED SUMMARY OF QUANTITIES		
	DECK	APP SLAB 3	APP SLAB 4	ABUT 3	ABUT 4				BRIDGE TOTAL	UNIT	ITEMS	ITEM NUMBER	QUANTITIES	UNIT	ITEMS
					731.2				731.2	CY	STRUCTURE EXCAVATION (ABUTMENT #4)	204.25			
				433.6					433.6	CY	STRUCTURE EXCAVATION (ABUTMENTS #1- #3)	204.25			
1058.7									1058.7	CY	GRANULAR BACKFILL FOR STRUCTURES	204.30			
	177								177	CY	CONCRETE, HIGH PERFORMANCE CLASS A	501.33			
695									695	CY	CONCRETE, HIGH PERFORMANCE CLASS B	501.34			
	34682								34682	LB	STRUCTURAL STEEL, ROLLED BEAM (W30x90 DIAPHRAGM)	506.50			
	139240								139240	LB	STRUCTURAL STEEL, PLATE GIRDER	506.55			
60744									60744	LB	REINFORCING STEEL, LEVEL I	507.11			
60310									60310	LB	REINFORCING STEEL, LEVEL III	507.13			
					144				144	LF	DRILLING AND GROUTING DOWELS	507.16			
				50	50				100	EACH	MECHANICAL BAR CONNECTOR	507.19			
	1								1	LS	SHEAR CONNECTORS (3072 EA. - 7/8" X 7")(BRIDGE 43N)	508.15			
	656								656	SY	LONGITUDINAL DECK GROOVING	509.10			
99									99	GAL	WATER REPELLENT, SILANE	514.10			
	95								95	LF	BRIDGE EXPANSION JOINT, ASPHALTIC PLUG	516.10			
	95								95	LF	JOINT SEALER, HOT POURED	524.11			
	277								277	LF	BRIDGE RAILING, CONCRETE F-SHAPE	525.70			
				0.5	0.5				1	EACH	PARTIAL REMOVAL OF STRUCTURE (SUBSTRUCTURE 43N)	529.20			
	1								1	EACH	PARTIAL REMOVAL OF STRUCTURE (SUPERSTRUCTURE 43N)	529.20			
				6	6				12	EACH	BEARING DEVICE ASSEMBLY, ELASTOMERIC PAD W/ EXT. LOAD PLATES	531.18			
					50				50	CY	CONCRETE, CLASS C	541.30			
		1	1						2	CY	SPECIAL PROVISION (HIGH PERFORMANCE CONCRETE, RAPID SET)(FPQ)	900.608			
	50000								50000	DL	SPECIAL PROVISION (INCENTIVE/DISINCENTIVE)(N.A.B.I.)(BRIDGE 43N)	900.615			
1									1	EACH	SPECIAL PROVISION (TEMPORARY SUPPORTS AND HORIZONTAL SLIDE)	900.620			
				20					20	HR	SPECIAL PROVISION (UNEXPECTED OBSTRUCTION DRILLING)	900.630			
	88470								88470	LB	SPECIAL PROVISION (STRUCTURAL STEEL, PLATE GIRDER, GRADE HPS 70W)	900.635			
				450					450	LF	SPECIAL PROVISION (MICROPILE, CASED)(9.625")	900.640			
				95					95	LF	SPECIAL PROVISION (MICROPILE, UNCASED)(8.535")	900.640			
		1							1	LS	SPECIAL PROVISION (CONTRACTOR-FABRICATED PRECAST CONCRETE STRUCTURE)(APPROACH SLAB #3)	900.645			
			1						1	LS	SPECIAL PROVISION (CONTRACTOR-FABRICATED PRECAST CONCRETE STRUCTURE)(APPROACH SLAB #4)	900.645			
	1								1	LS	SPECIAL PROVISION (CPM SCHEDULE)(BRIDGE 43N)	900.645			
	4260								4260	SF	SPECIAL PROVISION (PRECAST PRESTRESSED CONCRETE DECK PANEL)(3 1/2")	900.670			

PROJECT NAME: HARTFORD
PROJECT NUMBER: IM 091-2(79)

FILE NAME: s12a132qs.dgn
PROJECT LEADER: K. HIGGINS
DESIGNED BY: W. LAMMER
BRIDGE QUANTITY SHEET 43N

PLOT DATE: 15-DEC-2014
DRAWN BY: K. FRIEDLAND
CHECKED BY: J. SALVATORI
SHEET 11 OF 166

STATE OF VERMONT
AGENCY OF TRANSPORTATION

BRIDGE QUANTITY SHEET 2

SUMMARY OF BRIDGE QUANTITIES					TOTALS	DESCRIPTIONS			DETAILED SUMMARY OF QUANTITIES		
	DECK	APP SLAB 1	APP SLAB 2	ABUT 1	ABUT 2	BRIDGE TOTAL	UNIT	ITEMS	ITEM NUMBER	QUANTITIES	UNIT	ITEMS
1517.7						1517.7	CY	STRUCTURE EXCAVATION (ABUTMENTS #1- #3)	204.25			
1305.4						1305.4	CY	GRANULAR BACKFILL FOR STRUCTURES	204.30			
	193					193	CY	CONCRETE, HIGH PERFORMANCE CLASS A	501.33			
800						800	CY	CONCRETE, HIGH PERFORMANCE CLASS B	501.34			
	45832					45832	LB	STRUCTURAL STEEL, ROLLED BEAM (W40 x 149 DIAPHRAGM)	506.50			
	229060					229060	LB	STRUCTURAL STEEL, PLATE GIRDER	506.55			
73436						73436	LB	REINFORCING STEEL, LEVEL I	507.11			
63317						63317	LB	REINFORCING STEEL, LEVEL III	507.13			
				50	50	100	EACH	MECHANICAL BAR CONNECTOR	507.19			
	1					1	LS	SHEAR CONNECTORS (2634 EA. - 7/8" X 7")(BRIDGE 43S)	508.15			
	686					686	SY	LONGITUDINAL DECK GROOVING	509.10			
96						96	GAL	WATER REPELLENT, SILANE	514.10			
	100					100	LF	BRIDGE EXPANSION JOINT, ASPHALTIC PLUG	516.10			
	100					100	LF	JOINT SEALER, HOT POURED	524.11			
	277					277	LF	BRIDGE RAILING, CONCRETE F-SHAPE	525.70			
				0.5	0.5	1	EACH	PARTIAL REMOVAL OF STRUCTURE (SUBSTRUCTURE 43S)	529.20			
	1					1	EACH	PARTIAL REMOVAL OF STRUCTURE (SUPERSTRUCTURE 43S)	529.20			
				6	6	12	EACH	BEARING DEVICE ASSEMBLY, ELASTOMERIC PAD W/ EXT. LOAD PLATES	531.18			
		1	1			2	CY	SPECIAL PROVISION (HIGH PERFORMANCE CONCRETE, RAPID SET)(FPQ)	900.608			
	50000					50000	DL	SPECIAL PROVISION (INCENTIVE/DISINCENTIVE)(N.A.B.I.)(BRIDGE 43S)	900.615			
	1					1	EACH	SPECIAL PROVISION (TEMPORARY SUPPORTS AND HORIZONTAL SLIDE)	900.620			
				10	10	20	HR	SPECIAL PROVISION (UNEXPECTED OBSTRUCTION DRILLING)	900.630			
960						960	LF	SPECIAL PROVISION (MICROPILE, CASED)(9.625")	900.640			
235						235	LF	SPECIAL PROVISION (MICROPILE, UNCASED)(8.535")	900.640			
		1				1	LS	SPECIAL PROVISION (CONTRACTOR-FABRICATED PRECAST CONCRETE STRUCTURE)(APPROACH SLAB #1)	900.645			
			1			1	LS	SPECIAL PROVISION (CONTRACTOR-FABRICATED PRECAST CONCRETE STRUCTURE)(APPROACH SLAB #2)	900.645			
	1					1	LS	SPECIAL PROVISION (CPM SCHEDULE)(BRIDGE 43S)	900.645			
				1		1	LS	SPECIAL PROVISION (FURNISHING EQUIPMENT FOR INSTALLING MICROPILES)	900.645			
	1					1	LS	SPECIAL PROVISION (PUBLIC PROTECTION FOR BRIDGE PROJECTS)	900.645			
	4402					4402	SF	SPECIAL PROVISION (PRECAST PRESTRESSED CONCRETE DECK PANEL)(3 1/2")	900.670			

PROJECT NAME: HARTFORD
PROJECT NUMBER: IM 091-2(79)

FILE NAME: s12a132qs.dgn
PROJECT LEADER: K. HIGGINS
DESIGNED BY: W. LAMMER
BRIDGE QUANTITY SHEET 43S

PLOT DATE: 15-DEC-2014
DRAWN BY: K. FRIEDLAND
CHECKED BY: J. SALVATORI
SHEET 12 OF 166

* 1½" SUPERPAVE BITUMINOUS CONCRETE PAVEMENT, TYPE IVS OVER
½" SUPERPAVE BITUMINOUS CONCRETE PAVEMENT, TYPE IV SHIM

**1½" SUPERPAVE BITUMINOUS CONCRETE PAVEMENT, TYPE IVS OVER
½" SUPERPAVE BITUMINOUS CONCRETE PAVEMENT SHIM, TYPE IVS OVER
2½" SUPERPAVE BITUMINOUS CONCRETE PAVEMENT, TYPE IIS OVER
2½" SUPERPAVE BITUMINOUS CONCRETE PAVEMENT, TYPE IIS

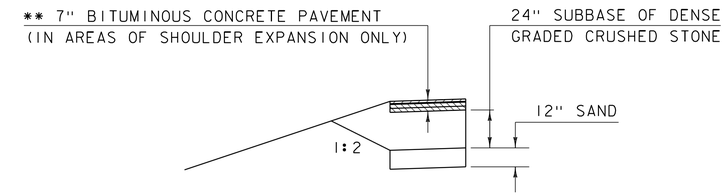

US ROUTE 5 SHOULDER EXPANSION

SCALE: ¼" = 1'-0"

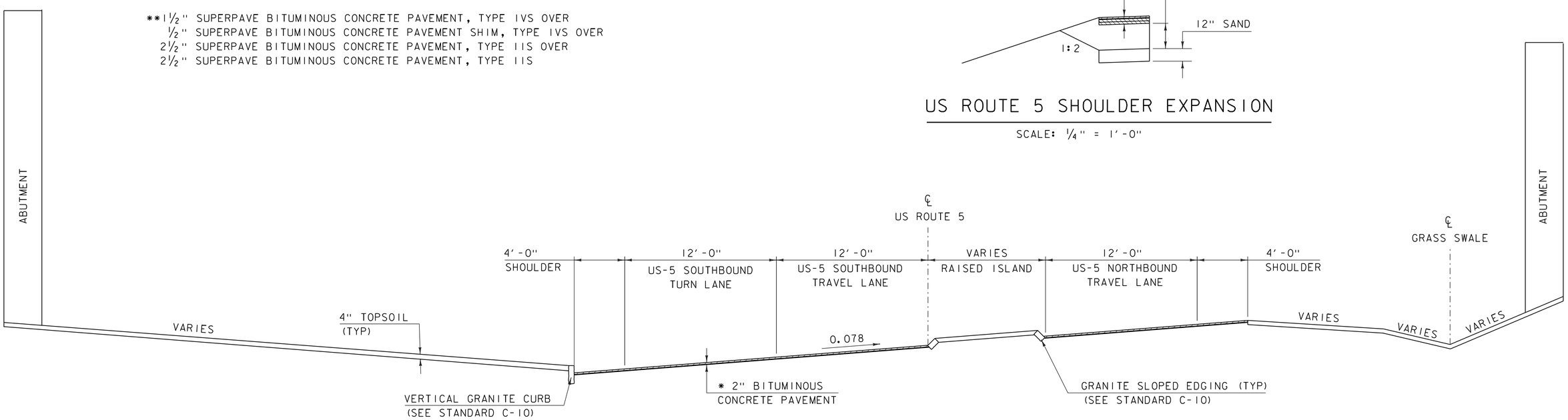

US ROUTE 5 PROPOSED TYPICAL SECTION

SCALE: ¼" = 1'-0"

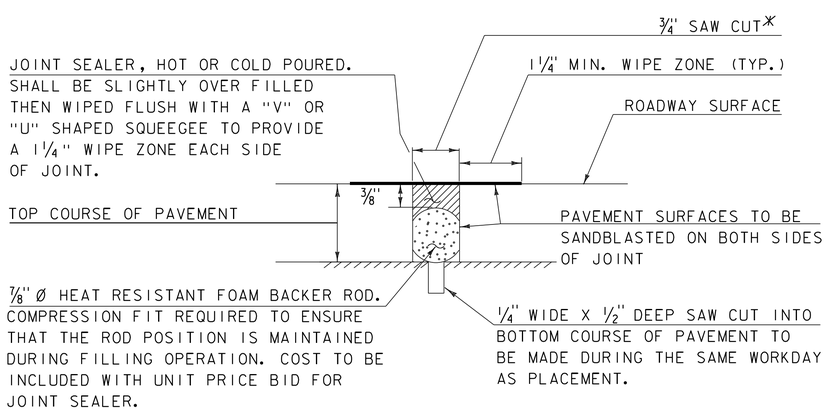

SAWED PAVEMENT JOINT DETAIL

(NOT TO SCALE)

*JOINT IS TO BE LOCATED ACCURATELY BY STRING LINING, OR OTHER MEANS, PRIOR TO PAVING, SO THAT THE SAW CUTS WILL BE MADE DIRECTLY OVER THE END OF CONCRETE DECK. JOINT SHALL BE CUT DRY IN A SINGLE PASS AND BE SEALED WITHIN 24 HOURS OR PRIOR TO EXPOSURE TO TRAFFIC. JOINT SHALL BE CLEANED PRIOR TO APPLYING THE JOINT SEALER.

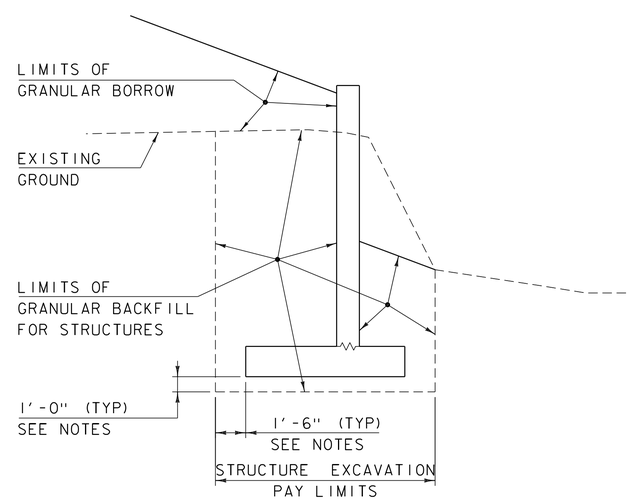

TYPICAL EARTHWORK SECTION FOR RETAINING WALL

NOT TO SCALE

PROJECT NAME: HARTFORD	
PROJECT NUMBER: IM 091-2(79)	
FILE NAME: s12a132typical.dgn	PLOT DATE: 15-DEC-2014
PROJECT LEADER: K. HIGGINS	DRAWN BY: K. FRIEDLAND
DESIGNED BY: W. LAMMER	CHECKED BY: J. SALVATORI
TYPICAL SECTIONS 1	SHEET 13 OF 166

* 1½" SUPERPAVE BITUMINOUS CONCRETE PAVEMENT, TYPE IVS OVER
1½" SUPERPAVE BITUMINOUS CONCRETE PAVEMENT, TYPE IVS OVER
3¼" SUPERPAVE BITUMINOUS CONCRETE PAVEMENT, TYPE IIS OVER
3¼" SUPERPAVE BITUMINOUS CONCRETE PAVEMENT, TYPE IIS

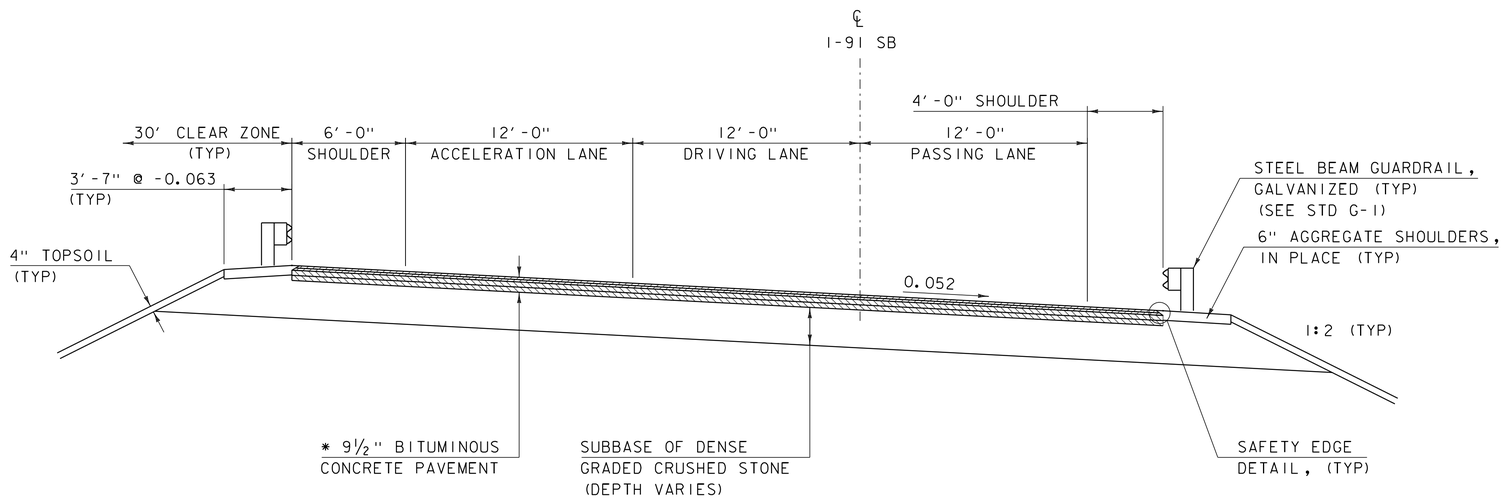

I-91 SOUTHBOUND TYPICAL SECTION

SCALE: ¼" = 1'-0"

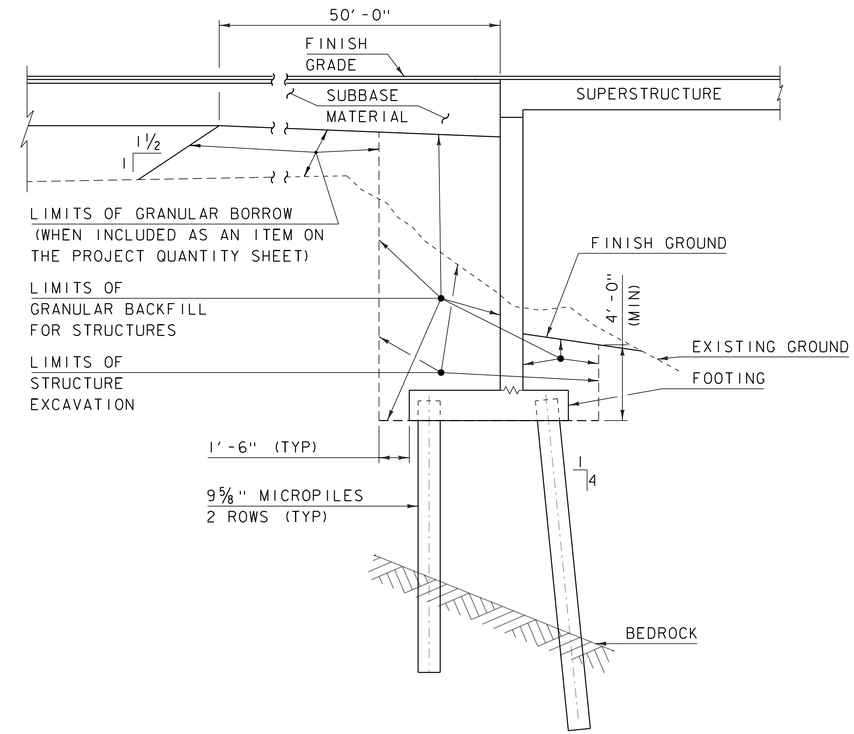

TYPICAL EARTHWORK SECTION FOR ABUTMENT ON MICROPILES

NOT TO SCALE

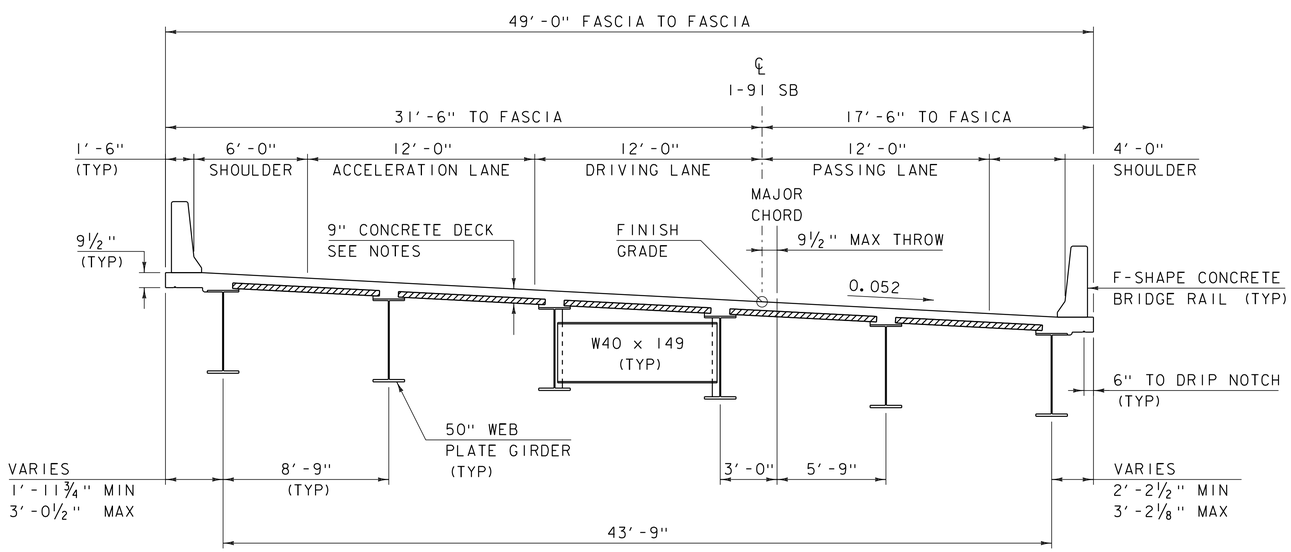

BRIDGE 43S TYPICAL SECTION

SCALE: ¼" = 1'-0"

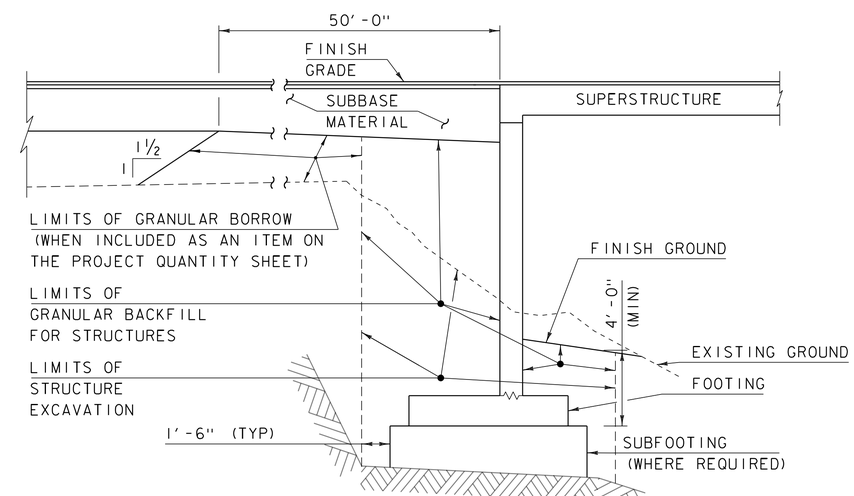

TYPICAL EARTHWORK SECTION FOR ABUTMENT ON SPREAD FOOTING

NOT TO SCALE

NOTES:

1) 9" DECK (3½" SPECIAL PROVISION "PRECAST PRESTRESSED CONCRETE DECK PANEL" AND 5½" HPC, CLASS A)

PROJECT NAME: HARTFORD	
PROJECT NUMBER: IM 091-2(79)	
FILE NAME: s12a132typical.dgn	PLOT DATE: 15-DEC-2014
PROJECT LEADER: K. HIGGINS	DRAWN BY: K. FRIEDLAND
DESIGNED BY: W. LAMMER	CHECKED BY: J. SALVATORI
TYPICAL SECTIONS 2	SHEET 14 OF 166

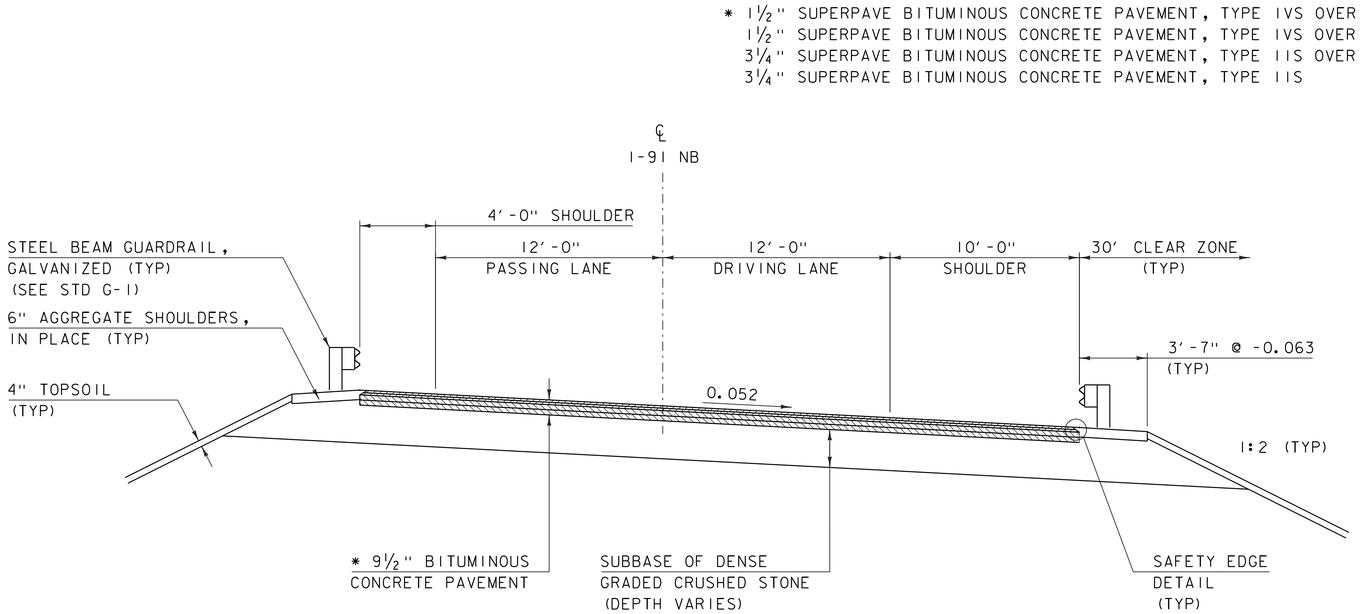

I-91 NORTHBOUND TYPICAL SECTION

SCALE: ¼" = 1'-0"

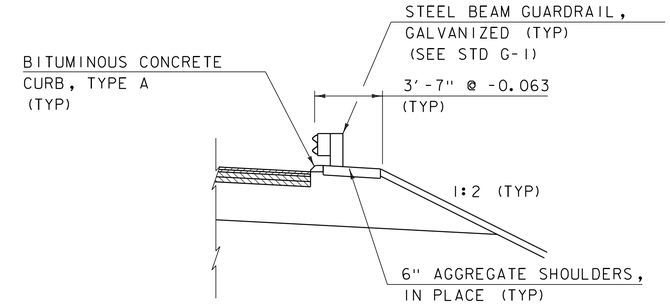

I-91 TYPICAL CURB SECTION

SCALE: ¼" = 1'-0"

MATERIAL TOLERANCES
(IF USED ON PROJECT)

SURFACE	
- PAVEMENT (TOTAL THICKNESS)	+/- ¼"
- AGGREGATE SURFACE COURSE	+/- ½"
SUBBASE	+/- 1"
SAND BORROW	+/- 1"

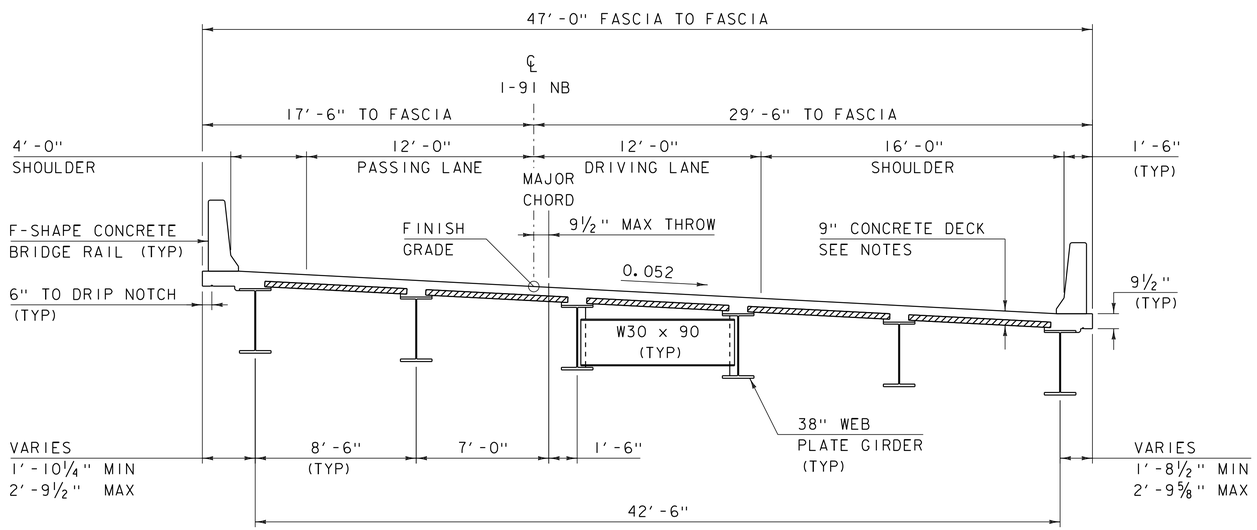

BRIDGE 43N TYPICAL SECTION

SCALE: ¼" = 1'-0"

NOTES:

1) 9" DECK (3½" SPECIAL PROVISION "PRECAST PRESTRESSED CONCRETE DECK PANEL" AND 5½" HPC, CLASS A)

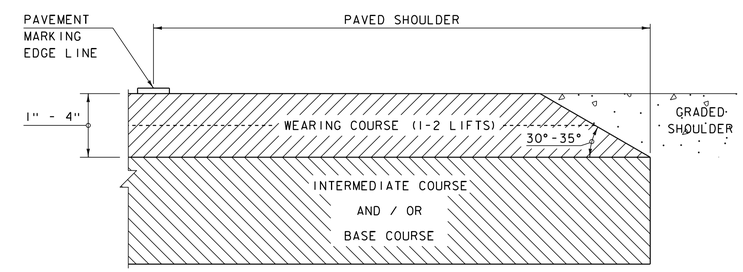

SAFETY EDGE DETAIL

NOT TO SCALE

NOTES:
1. LEVELING COURSE MAY INCLUDE THE "SAFETY EDGE" AT THE CONTRACTOR'S CHOICE.
2. THE EDGE OF PAVEMENT SHALL BE FORMED IN SUCH A WAY THAT THE BITUMINOUS CONCRETE PAVEMENT IS EXTRUDED OR COMPRESSED TO FORM THE 30 TO 35 DEGREE ANGLE. DEVICES THAT SIMPLY STRIKE-OFF THE MIX WITHOUT PROVIDING ANY COMPACTIVE EFFORT WILL NOT BE ALLOWED.

PROJECT NAME: HARTFORD
PROJECT NUMBER: IM 091-2(79)

FILE NAME: s12a132typical.dgn
PROJECT LEADER: K. HIGGINS
DESIGNED BY: W. LAMMER
TYPICAL SECTIONS 3

PLOT DATE: 15-DEC-2014
DRAWN BY: K. FRIEDLAND
CHECKED BY: J. SALVATORI
SHEET 15 OF 166

GENERAL INFORMATION

SYMBOLOGY LEGEND NOTE

THE SYMBOLOGY ON THIS SHEET IS INTENDED TO COVER STANDARD CONVENTIONAL SYMBOLOGY. THE SYMBOLOGY IS USED FOR EXISTING & PROPOSED FEATURES WITH HEAVIER LINEWEIGHT, IN COMBINATION WITH PROJECT ANNOTATION, AS NOTED ON PROJECT PLAN SHEETS. THIS LEGEND SHEET COVERS THE BASICS. SYMBOLOGY ON PLANS MAY VARY, PLAN ANNOTATIONS AND NOTES SHOULD BE USED TO CLARIFY AS NEEDED.

R.O.W. ABBREVIATIONS (CODES) & SYMBOLS

POINT	CODE	DESCRIPTION
	CH	CHANNEL EASEMENT
	CONST	CONSTRUCTION EASEMENT
	CUL	CULVERT EASEMENT
	D&C	DISCONNECT & CONNECT
	DIT	DITCH EASEMENT
	DR	DRAINAGE EASEMENT
	DRIVE	DRIVEWAY EASEMENT
	EC	EROSION CONTROL
	HWY	HIGHWAY EASEMENT
	I&M	INSTALL & MAINTAIN EASEMENT
	LAND	LANDSCAPE EASEMENT
	R&RES	REMOVE & RESET
	R&REP	REMOVE & REPLACE
	SR	SLOPE RIGHT
	UE	UTILITY EASEMENT
	(P)	PERMANENT EASEMENT
	(T)	TEMPORARY EASEMENT
■	BNDNS	BOUND SET
▣	BNDNS	BOUND TO BE SET
●	IPNS	IRON PIN SET
◎	IPNS	IRON PIN TO BE SET
⊠	CALC	EXISTING ROW POINT
○	PROW	PROPOSED ROW POINT
[LENGTH]		LENGTH CARRIED ON NEXT SHEET

COMMON TOPOGRAPHIC POINT SYMBOLS

POINT	CODE	DESCRIPTION
	APL	BOUND APPARENT LOCATION
	BM	BENCHMARK
	BND	BOUND
	CB	CATCH BASIN
	COMB	COMBINATION POLE
	DITHR	DROP INLET THROATED DNC
	EL	ELECTRIC POWER POLE
	FPOLE	FLAGPOLE
	GASFIL	GAS FILLER
	GP	GUIDE POST
	GSO	GAS SHUT OFF
	GUY	GUY POLE
	GUYW	GUY WIRE
	GV	GATE VALUE
	H	TREE HARDWOOD
	HCTRL	CONTROL HORIZONTAL
	HVCTRL	CONTROL HORIZ. & VERTICAL
	HYD	HYDRANT
	IP	IRON PIN
	IPIPE	IRON PIPE
	LI	LIGHT - STREET OR YARD
	MB	MAILBOX
	MH	MANHOLE (MH)
	MM	MILE MARKER
	PM	PARKING METER
	PMK	PROJECT MARKER
	POST	POST STONE/WOOD
	RRSIG	RAILROAD SIGNAL
	RRSL	RAILROAD SWITCH LEVER
	S	TREE SOFTWOOD
	SAT	SATELLITE DISH
	SHRUB	SHRUB
	SIGN	SIGN
	STUMP	STUMP
	TEL	TELEPHONE POLE
	TIE	TIE
	TSIGN	SIGN W/DOUBLE POST
	VCTRL	CONTROL VERTICAL
	WELL	WELL
	WSO	WATER SHUT OFF

THESE ARE COMMON VAOT SURVEY POINT SYMBOLS FOR EXISTING FEATURES, ALSO USED FOR PROPOSED FEATURES WITH HEAVIER LINEWEIGHT, IN COMBINATION WITH PROPOSED ANNOTATION.

PROPOSED GEOMETRY CODES

CODE	DESCRIPTION
PC	POINT OF CURVATURE
PI	POINT OF INTERSECTION
CC	CENTER OF CURVE
PT	POINT OF TANGENCY
PCC	POINT OF COMPOUND CURVE
PRC	POINT OF REVERSE CURVE
POB	POINT OF BEGINNING
POE	POINT OF ENDING
STA	STATION PREFIX
AH	AHEAD STATION SUFFIX
BK	BACK STATION SUFFIX
D	CURVE DEGREE OF (100FT)
R	CURVE RADUIS OF
T	CURVE TANGENT LENGTH
L	CURVE LENGTH OF
E	CURVE EXTERNAL DISTANCE

UTILITY SYMBOLOGY

UNDERGROUND UTILITIES

	UTILITY (GENERIC-UNKNOWN)
UT	TELEPHONE
UE	ELECTRIC
UC	CABLE (TV)
UEC	ELECTRIC+CABLE
UET	ELECTRIC+TELEPHONE
UCT	CABLE+TELEPHONE
UECT	ELECTRIC+CABLE+TELEP.
G	GAS LINE
W	WATER LINE
S	SANITARY SEWER (SEPTIC)

ABOVE GROUND UTILITIES (AERIAL)

	UTILITY (GENERIC-UNKNOWN)
T	TELEPHONE
E	ELECTRIC
C	CABLE (TV)
EC	ELECTRIC+CABLE
ET	ELECTRIC+TELEPHONE
AER E&T	ELECTRIC+TELEPHONE
CT	CABLE+TELEPHONE
ECT	ELECTRIC+CABLE+TELEP.
	UTILITY POLE GUY WIRE

PROJECT CONSTRUCTION SYMBOLOGY

PROJECT DESIGN & LAYOUT SYMBOLOGY

CZ	CLEAR ZONE
	PLAN LAYOUT MATCHLINE

PROJECT CONSTRUCTION FEATURES

	TOP OF CUT SLOPE
	TOE OF FILL SLOPE
	STONE FILL
	BOTTOM OF DITCH ℄
	CULVERT PROPOSED
	STRUCTURE SUBSURFACE
PDF	PROJECT DEMARCATION FENCE
BF	BARRIER FENCE
	TREE PROTECTION ZONE (TPZ)
	STRIPING LINE REMOVAL
	SHEET PILES

CONVENTIONAL BOUNDARY SYMBOLOGY

BOUNDARY LINES

TOWN LINE	TOWN BOUNDARY LINE
COUNTY LINE	COUNTY BOUNDARY LINE
STATE LINE	STATE BOUNDARY LINE
	PROPOSED STATE R.O.W. (LIMITED ACCESS)
	PROPOSED STATE R.O.W.
	STATE ROW (LIMITED ACCESS)
	STATE ROW
	TOWN ROW
	PERMANENT EASEMENT LINE (P)
	TEMPORARY EASEMENT LINE (T)
	SURVEY LINE
P/L	PROPERTY LINE (P/L)
SR	SLOPE RIGHTS
6f	6F PROPERTY BOUNDARY
4f	4F PROPERTY BOUNDARY
HAZ	HAZARDOUS WASTE

EPSC LAYOUT PLAN SYMBOLOGY

EPSC MEASURES

	FILTER CURTAIN
	SILT FENCE
	SILT FENCE WOVEN WIRE
	CHECK DAM
	DISTURBED AREAS REQUIRING RE-VEGETATION
	EROSION MATTING

SEE EPSC DETAIL SHEETS FOR ADDITIONAL SYMBOLOGY

ENVIRONMENTAL RESOURCES

	WETLAND BOUNDARY
	RIPARIAN BUFFER ZONE
	WETLAND BUFFER ZONE
	SOIL TYPE BOUNDARY
T&E	THREATENED & ENDANGERED SPECIES
HAZ	HAZARDOUS WASTE AREA
AG	AGRICULTURAL LAND
HABITAT	FISH & WILDLIFE HABITAT
FLOOD PLAIN	FLOOD PLAIN
OHW	ORDINARY HIGH WATER (OHW)
	STORM WATER
	USDA FOREST SERVICE LANDS
	WILDLIFE HABITAT SUIT/CONN

ARCHEOLOGICAL & HISTORIC

ARCH	ARCHEOLOGICAL BOUNDARY
HISTORIC DIST	HISTORIC DISTRICT BOUNDARY
HISTORIC	HISTORIC AREA
H	HISTORIC STRUCTURE

CONVENTIONAL TOPOGRAPHIC SYMBOLOGY

EXISTING FEATURES

	ROAD EDGE PAVEMENT
	ROAD EDGE GRAVEL
	DRIVEWAY EDGE
	DITCH
	FOUNDATION
	FENCE (EXISTING)
	FENCE WOOD POST
	FENCE STEEL POST
	GARDEN
	ROAD GUARDRAIL
	RAILROAD TRACKS
	CULVERT (EXISTING)
	STONE WALL
	WALL
	WOOD LINE
	BRUSH LINE
	HEDGE
	BODY OF WATER EDGE
	LEDGE EXPOSED

PROJECT NAME: HARTFORD
PROJECT NUMBER: IM 091-2(79)

FILE NAME: 12a132/s12a132excel.dgn
PROJECT LEADER: K. HIGGINS
DESIGNED BY: W. LAMMER
LEGEND SHEET

PLOT DATE: 15-DEC-2014
DRAWN BY: K. FRIEDLAND
CHECKED BY: J. SALVATORI
SHEET 16 OF 166

GPS CONTROL POINTS

PT #1 EXIT 4

NORTH = 416856.520
EAST = 1683631.840
ELEV. = 570.79

THE STATION IS LOCATED ABOUT 1.6 KM (1.00 MI) NORTH OF THE INTERSTATE 91 AND 89 INTERCHANGE IN HARTFORD, WHITE RIVER JUNCTION, AT THE DEPARTMENT OF TRANSPORTATION DISTRICT OFFICE. TO REACH FROM THE INTERSTATE HIGHWAY 91 BRIDGES OVER U.S. ROUTE 5 IN WHITE RIVER JUNCTION, GO NORTHEAST ALONG U.S. ROUTE 5 FOR 0.2 MI (0.3 KM) TO HOLIDAY INN DRIVE ON THE RIGHT. TURN RIGHT AND GO EAST 0.08 KM (0.05 MI) TO THE INTERSECTION OF BESWICK DRIVE ON THE RIGHT. TURN RIGHT AND GO SOUTH ON BESWICK DRIVE FOR 0.32 KM (0.20 MI) TO THE GATE TO THE VERMONT AGENCY OF TRANSPORTATION DISTRICT 4 OFFICE. PASS THROUGH GATE AND CONTINUE ON PAVED ROAD FOR 0.08 KM (0.05 MI) TO THE STATION ON THE LEFT, IN A GRASS AREA JUST NORTH OF THE STORAGE UTILITY BUILDING. STATION MARK IS A STATE OF VERMONT SURVEY MARK DISK SET IN THE TOP OF A ROCK OUTCROP FLUSH WITH GROUND SURFACE. IT IS 245 FT (74.7 M) SOUTHEAST OF THE SOUTHEAST CORNER OF THE DISTRICT 4 OFFICE, 27.5 FT (8.4 M) NORTHEAST OF THE NORTHWEST CORNER OF THE UTILITY STORAGE BUILDING, 44.7 FT (13.6 M) NORTHWEST OF THE NORTHEAST CORNER OF THE UTILITY STORAGE BUILDING, 55 FT (16.8 M) EAST OF THE EAST EDGE OF THE PAVED GARAGE YARD AND 5.7 FT (1.7 M) NORTH OF A CARSONITE WITNESS POST.

PT #10 E 56

NORTH = 418205.760
EAST = 1683404.010
ELEV. = 573.98

THE STATION IS LOCATED APPROXIMATELY 6.88 KM (4.25 MI) WEST OF LEBANON NEW HAMPSHIRE, 5.88 KM (3.65 MI) NORTH OF NORTH HARTLAND VERMONT, 1.63 KM (1.00 MI) WEST OF WHITE RIVER JUNCTION VERMONT, AND IS AT THE JUNCTION OF INTERSTATE 91 (EXIT 5) AND STATE HIGHWAY 5. TO REACH THE STATION FROM THE JUNCTION OF INTERSTATES 89 AND 91, PROCEED NORTH 0.35 MI (0.56 KM) ALONG INTERSTATE 91 TO THE JUNCTION OF INTERSTATE 91 (EXIT 5) AND STATE HIGHWAY 5. TURN LEFT FROM THE INTERSTATE 91 OFFRAMP, AND PROCEED SOUTHWEST 0.1 MI, (0.2 KM) PASSING UNDERNEATH INTERSTATE 91, TO THE ONRAMP FOR INTERSTATE 91 SOUTHBOUND ON THE RIGHT. TURN RIGHT AND PROCEED NORTHERLY AND THEN EASTERLY 0.3 MI (0.5 KM) ALONG THE ONRAMP TO THE STATION ON THE LEFT IN THE MEDIAN BETWEEN INTERSTATE 91 SOUTHBOUND AND THE ONRAMP. THE STATION IS AN STANDARD NGS VERTICAL CONTROL DISK STAMPED--E 56 1978-- SET FLUSH IN THE TOP OF A ROCK OUTCROP APPROXIMATELY 4 M (13.1 FT) BY 6 M (19.7 FT) IN SIZE AND PROJECTING 1.3 M (4.3 FT) ABOVE THE GROUND. THE STATION IS LOCATED 27.00 M (88.58 FT) ON A BEARING OF NORTH 15 DEGREES EAST FROM A CATCH BASIN NEAR THE JOINING OF THE ONRAMP AND THE HIGHWAY, 12.70 M (41.67FT) ON A BEARING OF NORTH 60 DEGREES WEST FROM THE EAST EDGE OF PAVEMENT OF THE ONRAMP, 11.75 M (38.55 FT) ON A BEARING OF NORTH 74 DEGREES EAST FROM THE WEST EDGE OF PAVEMENT OF THE HIGHWAY, 10.19 M (33.43 FT) ON A BEARING OF NORTH 12 DEGREES WEST FROM THE WEST POST OF A DOUBLE POSTED SIGN--MERGING LANE--, AND 1.14 M (3.74 FT) ON A BEARING OF NORTH 80 DEGREES EAST FROM A CARSONITE MARKER. ALL DISTANCES ARE SLOPE DISTANCES AND THE DIRECTIONS ARE MAGNETIC COMPASS BEARINGS.

TRAVERSE TIES

HVCTRL #2

NORTH = 416899.63
EAST = 1683297.867
ELEV. = 566.447

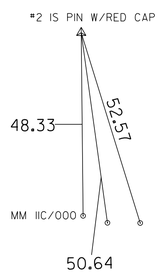

NORTH =
EAST =
ELEV. =

NORTH =
EAST =
ELEV. =

NORTH =
EAST =
ELEV. =

NORTH =
EAST =
ELEV. =

ALIGNMENT TIES

NORTH =
EAST =
ELEV. =

NORTH =
EAST =
ELEV. =

NORTH =
EAST =
ELEV. =

NORTH =
EAST =
ELEV. =

NORTH =
EAST =
ELEV. =

DATUM

VERTICAL NAVD88
HORIZONTAL NAD83(2011)
ADJUSTMENT COMPASS

PROJECT NAME: HARTFORD
PROJECT NUMBER: IM 091-2(79)

FILE NAME: X12A132T1.DGN
PROJECT LEADER: K. HIGGINS
DESIGNED BY: VTRANS
TIE SHEET

PLOT DATE: 15-DEC-2014
DRAWN BY: C. CYR
CHECKED BY: P. BEYOR
SHEET 17 OF 166

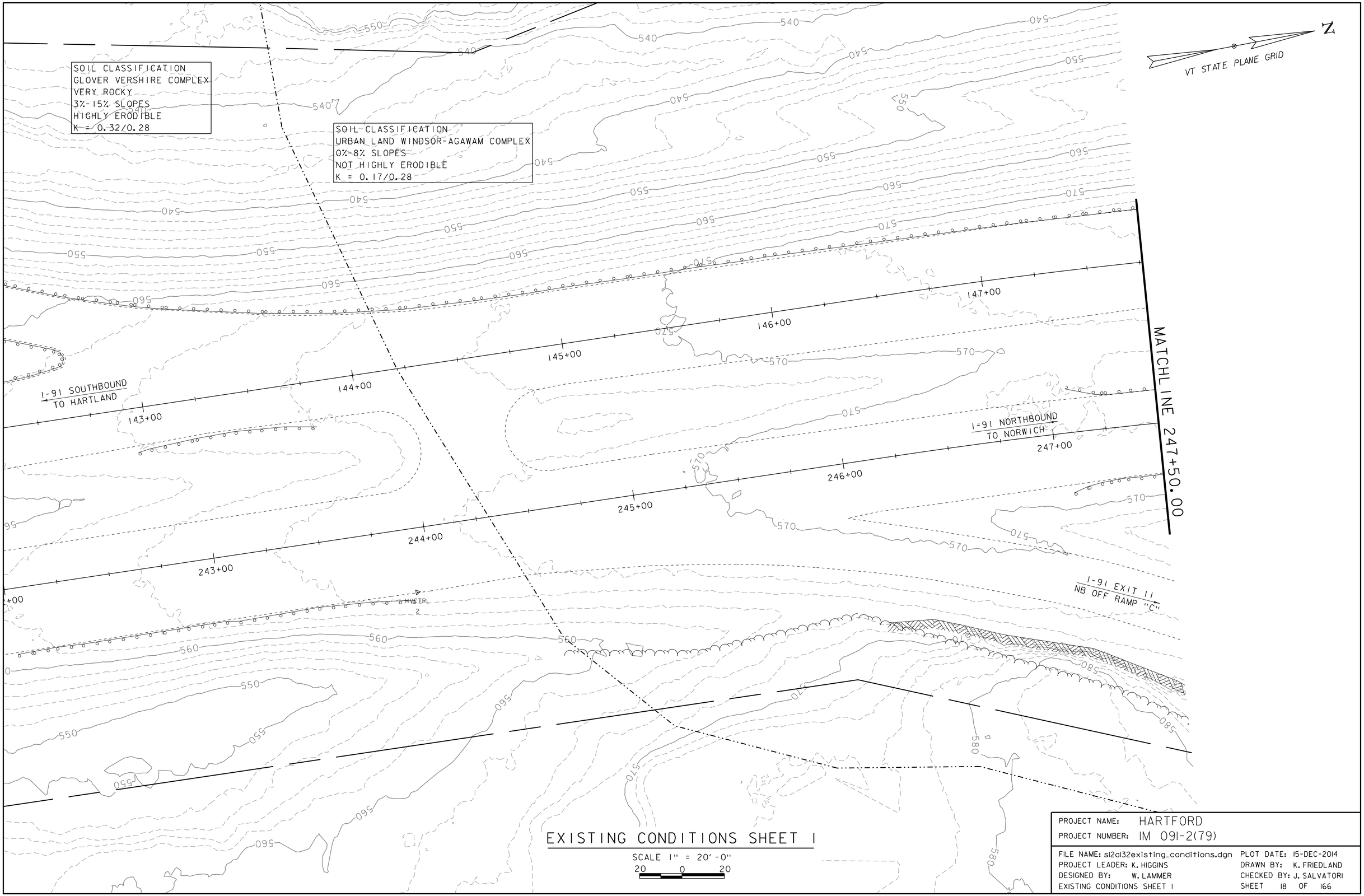

EXISTING CONDITIONS SHEET 1

SCALE 1" = 20'-0"
20 0 20

PROJECT NAME: HARTFORD	
PROJECT NUMBER: IM 091-2(79)	
FILE NAME: s12a132existing_conditions.dgn	PLOT DATE: 15-DEC-2014
PROJECT LEADER: K. HIGGINS	DRAWN BY: K. FRIEDLAND
DESIGNED BY: W. LAMMER	CHECKED BY: J. SALVATORI
EXISTING CONDITIONS SHEET 1	SHEET 18 OF 166

SOIL CLASSIFICATION
GLOVER VERSHIRE COMPLEX
VERY ROCKY
15%-35% SLOPES
HIGHLY ERODIBLE
K = 0.32/0.28

VT STATE PLANE GRID

BENCHMARK
HIGHWAY DEPT.
BM 1912-2
ELEV. =577.34

US-5 TO HARTLAND

I-91 EXIT 11 SB ON RAMP "A"

FENCE

HVCTRL 112

HVCTRL 101

HVCTRL 122

HVCTRL 4

I-91 SOUTHBOUND TO HARTLAND

148+00 149+00 150+00 151+00 152+00 153+00

HVCTRL 11

MM 11A 000 2884

HVCTRL 121

HVCTRL 120

MATCHLINE 247+50.00

MATCHLINE 253+25.00

248+00 249+00 250+00 251+00 252+00 253+00

I-91 NORTHBOUND TO NORWICH

HVCTRL 3

HVCTRL 10

HVCTRL 100

HVCTRL 123

SOIL CLASSIFICATION
URBAN LAND WINDSOR-AGAWAM COMPLEX
0%-8% SLOPES
NOT HIGHLY ERODIBLE
K = 0.17/0.28

I-91 EXIT 11 NB OFF RAMP "C"

EXISTING BRIDGE DATA
3 SPAN ROLLED BEAM
LENGTH = 202.0'
WIDTH 37.3' (43N) & 42' (43S)
BUILT IN 1966

US-5 TO NORWICH

EXISTING CONDITIONS SHEET 2

SCALE 1" = 20'-0"
20 0 20

PROJECT NAME: HARTFORD	
PROJECT NUMBER: IM 091-2(79)	
FILE NAME: s12a132existing_conditions.dgn	PLOT DATE: 15-DEC-2014
PROJECT LEADER: K. HIGGINS	DRAWN BY: K. FRIEDLAND
DESIGNED BY: W. LAMMER	CHECKED BY: J. SALVATORI
EXISTING CONDITIONS SHEET 2	SHEET 19 OF 166

SOIL CLASSIFICATION
GLOVER VERSHIRE COMPLEX
VERY ROCKY
15%-35% SLOPES
HIGHLY ERODIBLE
K = 0.32/0.28

VT STATE PLANE GRID

I-91 SOUTHBOUND
TO HARTLAND

I-91 EXIT 11
SB ON RAMP "A"

HVCTRL
10

MATCHLINE 253+25.00

154+00
155+00
156+00
157+00
158+00
159+00
254+00
255+00
256+00
257+00

I-91 NORTHBOUND
TO NORWICH

SOIL CLASSIFICATION
URBAN LAND WINDSOR-AGAWAM COMPLEX
0%-8% SLOPES
NOT HIGHLY ERODIBLE
K = 0.17/0.28

I-91 EXIT 11
RAMP "D"

EXISTING CONDITIONS SHEET 3

SCALE 1" = 20'-0"
20 0 20

PROJECT NAME: HARTFORD
PROJECT NUMBER: IM 091-2(79)

FILE NAME: s12a132existing_conditions.dgn
PROJECT LEADER: K. HIGGINS
DESIGNED BY: W. LAMMER
EXISTING CONDITIONS SHEET 3

PLOT DATE: 15-DEC-2014
DRAWN BY: K. FRIEDLAND
CHECKED BY: J. SALVATORI
SHEET 20 OF 166

REMOVAL AND DISPOSAL OF GUARDRAIL
STA 247+07.98 - 247+50.00 LT

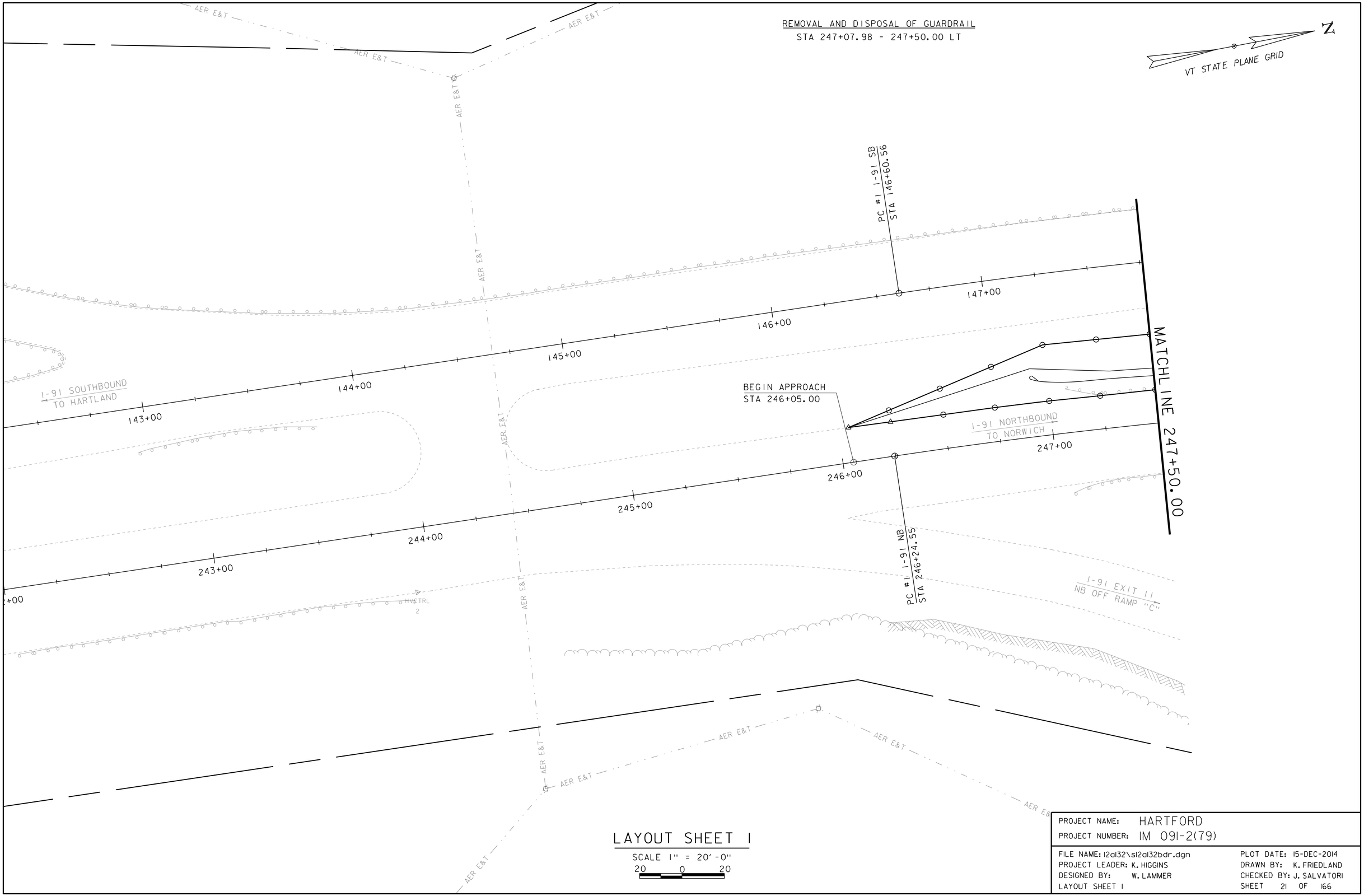

LAYOUT SHEET 1

SCALE 1" = 20'-0"
20 0 20

PROJECT NAME: HARTFORD	
PROJECT NUMBER: IM 091-2(79)	
FILE NAME: 12a132\s12a132bdr.dgn	PLOT DATE: 15-DEC-2014
PROJECT LEADER: K. HIGGINS	DRAWN BY: K. FRIEDLAND
DESIGNED BY: W. LAMMER	CHECKED BY: J. SALVATORI
LAYOUT SHEET 1	SHEET 21 OF 166

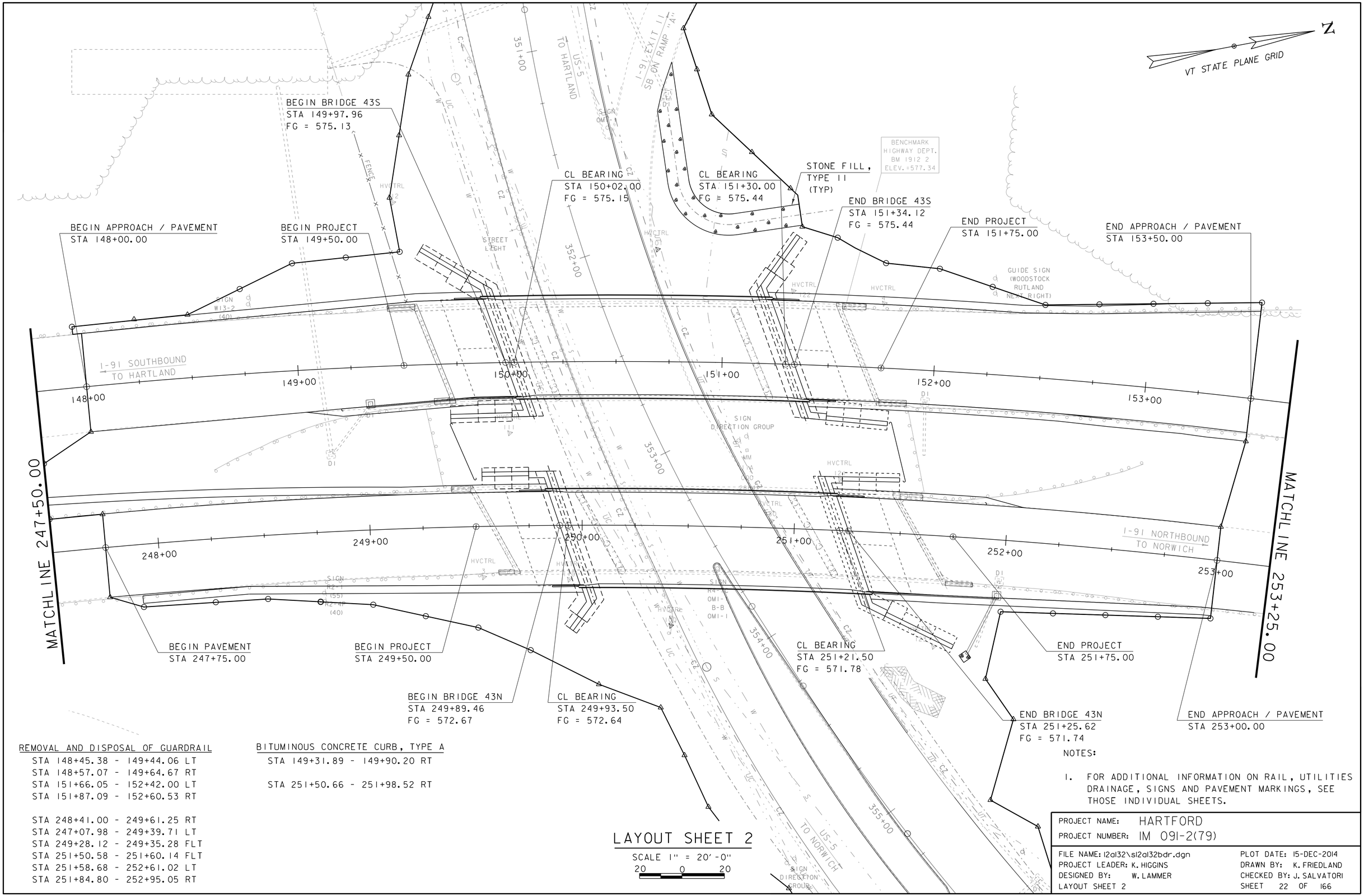

REMOVAL AND DISPOSAL OF GUARDRAIL

STA 148+45.38 - 149+44.06 LT
STA 148+57.07 - 149+64.67 RT
STA 151+66.05 - 152+42.00 LT
STA 151+87.09 - 152+60.53 RT

STA 248+41.00 - 249+61.25 RT
STA 247+07.98 - 249+39.71 LT
STA 249+28.12 - 249+35.28 FLT
STA 251+50.58 - 251+60.14 FLT
STA 251+58.68 - 252+61.02 LT
STA 251+84.80 - 252+95.05 RT

BITUMINOUS CONCRETE CURB, TYPE A

STA 149+31.89 - 149+90.20 RT

STA 251+50.66 - 251+98.52 RT

LAYOUT SHEET 2

SCALE 1" = 20'-0"
20 0 20

NOTES:

1. FOR ADDITIONAL INFORMATION ON RAIL, UTILITIES DRAINAGE, SIGNS AND PAVEMENT MARKINGS, SEE THOSE INDIVIDUAL SHEETS.

PROJECT NAME: HARTFORD	
PROJECT NUMBER: IM 091-2(79)	
FILE NAME: 12a132\s12a132bdr.dgn	PLOT DATE: 15-DEC-2014
PROJECT LEADER: K. HIGGINS	DRAWN BY: K. FRIEDLAND
DESIGNED BY: W. LAMMER	CHECKED BY: J. SALVATORI
LAYOUT SHEET 2	SHEET 22 OF 166

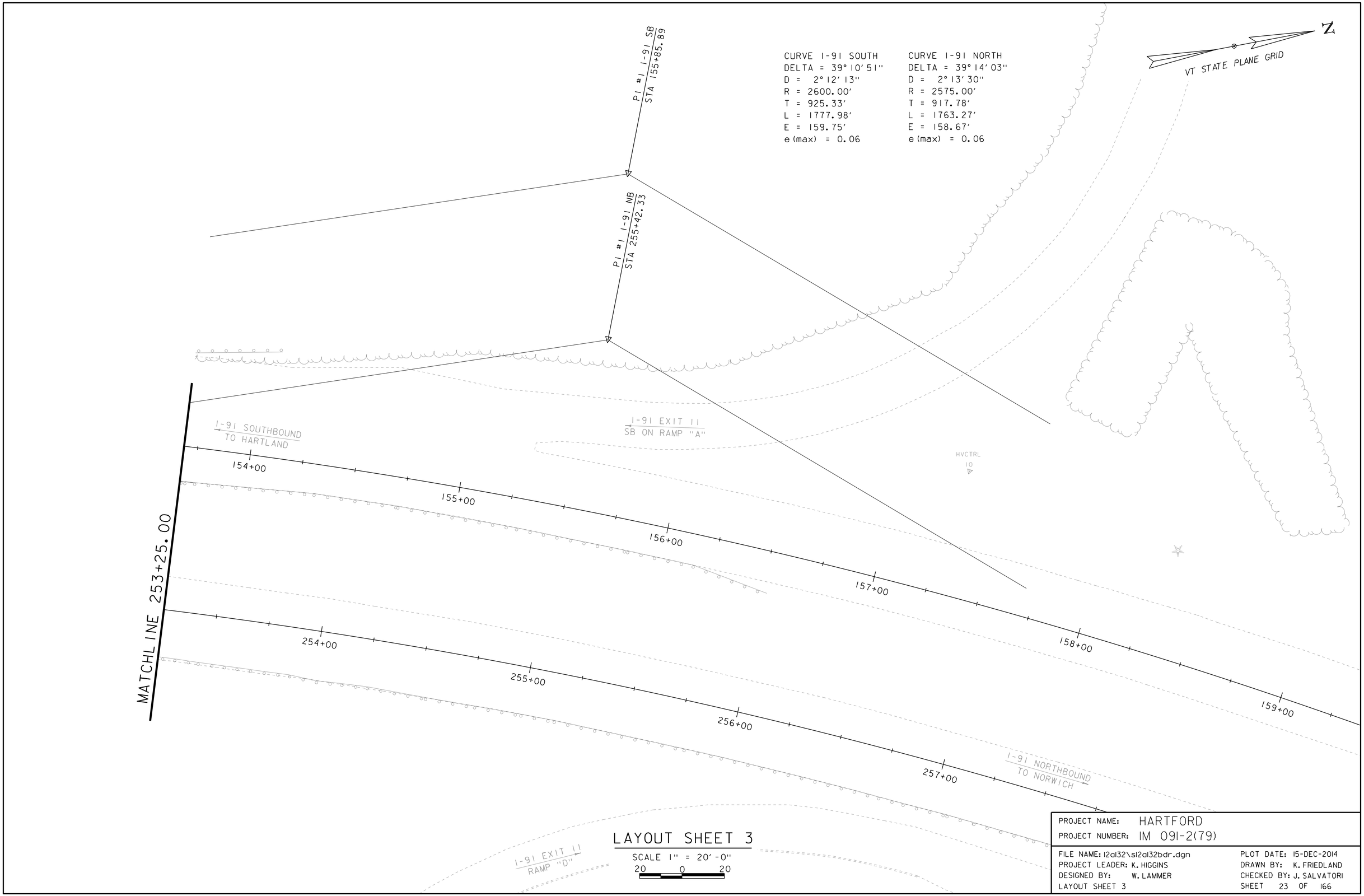

PROJECT NAME: HARTFORD
PROJECT NUMBER: IM 091-2(79)

FILE NAME: 12a132\s12a132bdr.dgn
PROJECT LEADER: K. HIGGINS
DESIGNED BY: W. LAMMER
LAYOUT SHEET 3

PLOT DATE: 15-DEC-2014
DRAWN BY: K. FRIEDLAND
CHECKED BY: J. SALVATORI
SHEET 23 OF 166

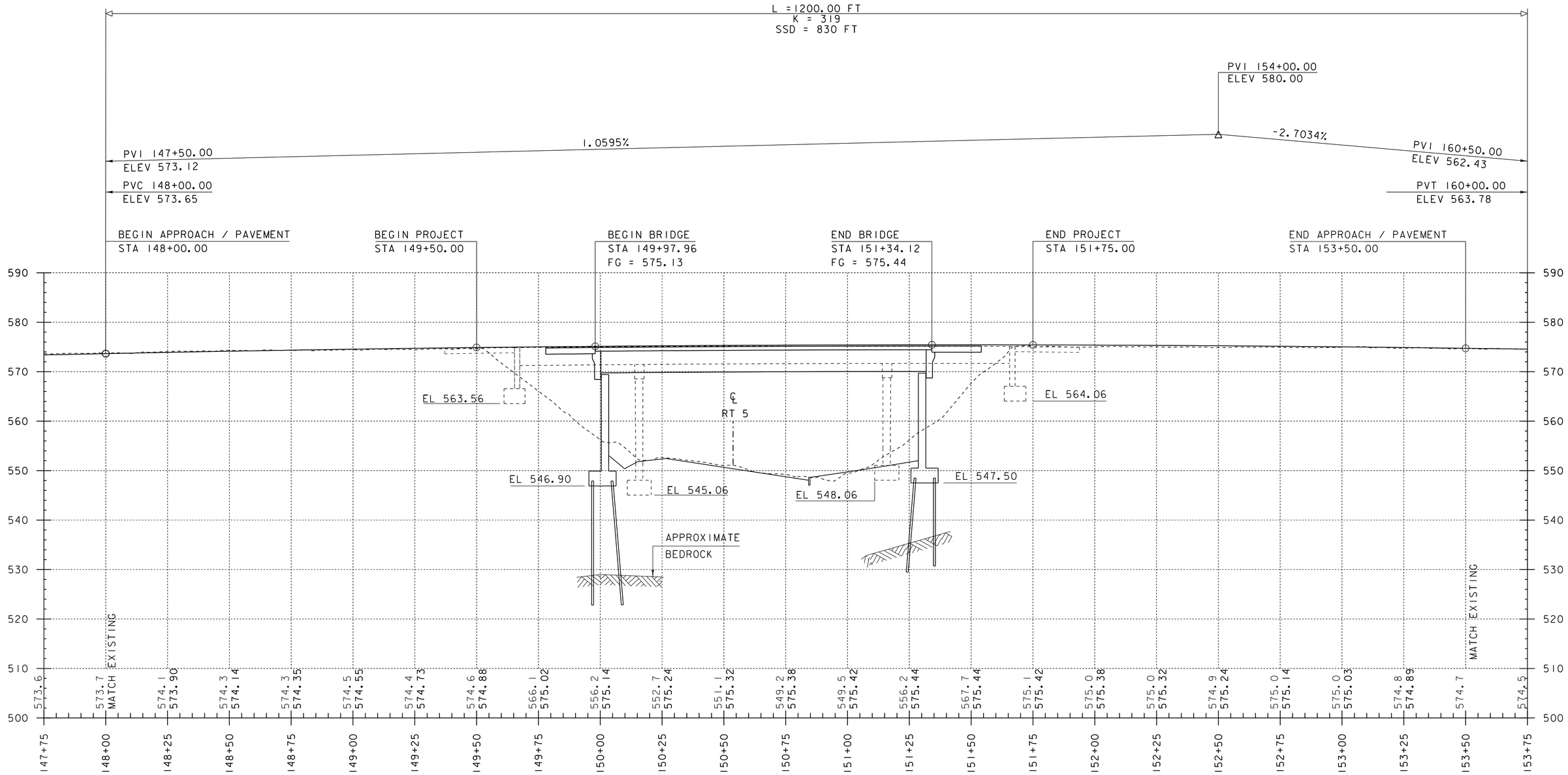

I-91 SB PROFILE

HOR. SCALE 1" = 20'-0"
VER. SCALE 1" = 10'-0"

EXISTING GROUND IS FROM LIDAR IMAGERY.

THE GRADES SHOWN TO THE NEAREST TENTH ARE THE EXISTING GROUND ELEVATIONS ALONG THE PROPOSED ALIGNMENT.

THE GRADES SHOWN TO THE NEAREST HUNDREDTH ARE THE FINISHED GROUND ELEVATIONS ALONG THE PROPOSED ALIGNMENT.

PROJECT NAME: HARTFORD	
PROJECT NUMBER: IM 091-2(79)	
FILE NAME: s12a132profile.dgn	PLOT DATE: 15-DEC-2014
PROJECT LEADER: K. HIGGINS	DRAWN BY: K. FRIEDLAND
DESIGNED BY: W. LAMMER	CHECKED BY: J. SALVATORI
I-91 SOUTHBOUND PROFILE	SHEET 24 OF 166

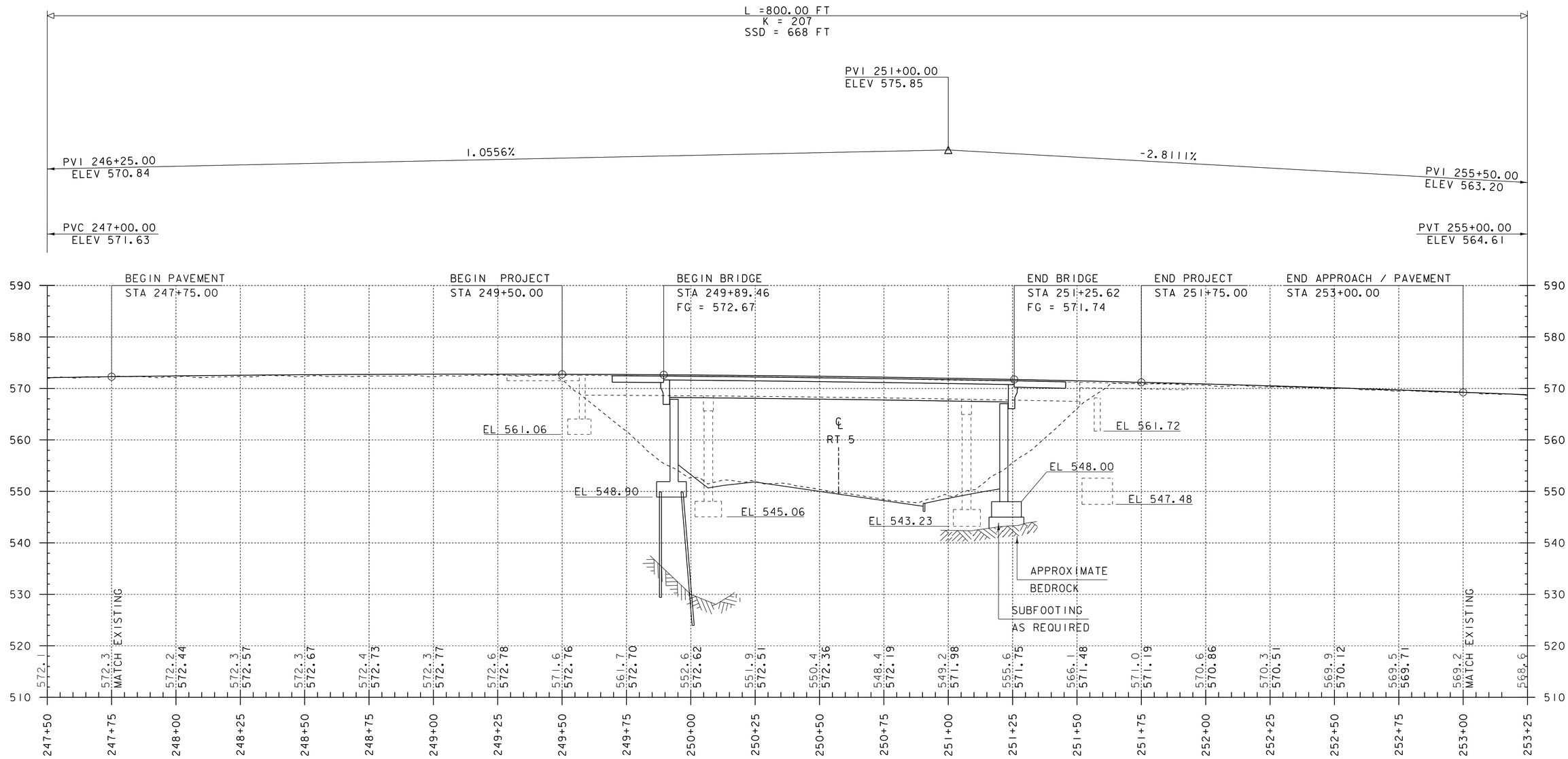

I-91 NB PROFILE

HOR. SCALE 1" = 20'-0"
VER. SCALE 1" = 10'-0"

EXISTING GROUND IS FROM LIDAR IMAGERY.

THE GRADES SHOWN TO THE NEAREST TENTH ARE THE EXISTING GROUND ELEVATIONS ALONG THE PROPOSED ALIGNMENT.

THE GRADES SHOWN TO THE NEAREST HUNDREDTH ARE THE FINISHED GROUND ELEVATIONS ALONG THE PROPOSED ALIGNMENT.

PROJECT NAME: HARTFORD	
PROJECT NUMBER: IM 091-2(79)	
FILE NAME: s12a132profile.dgn	PLOT DATE: 15-DEC-2014
PROJECT LEADER: K. HIGGINS	DRAWN BY: K. FRIEDLAND
DESIGNED BY: W. LAMMER	CHECKED BY: J. SALVATORI
I-91 NORTHBOUND PROFILE	SHEET 25 OF 166

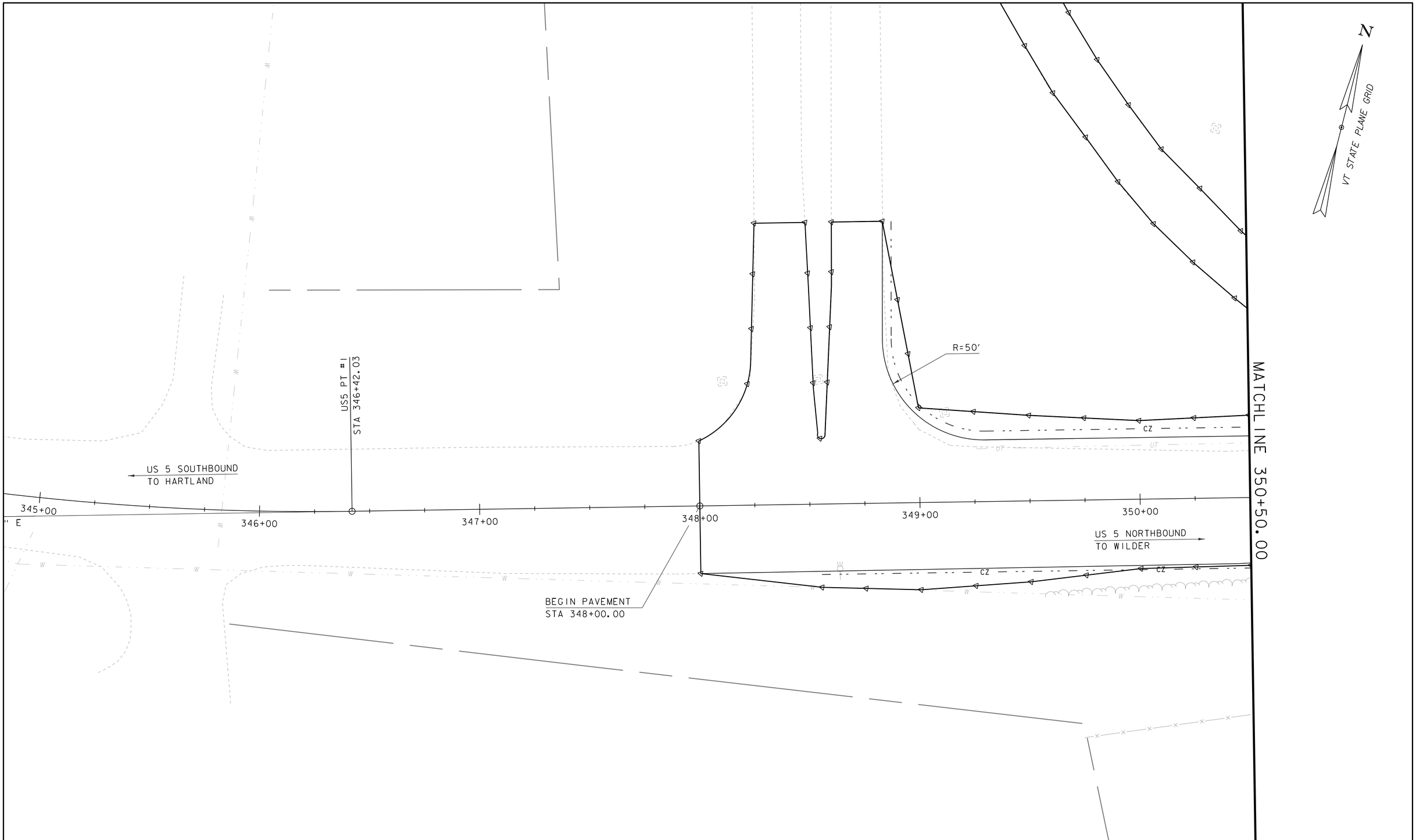

US 5 LAYOUT SHEET 1

SCALE 1" = 20'-0"

20 0 20

PROJECT NAME: HARTFORD	
PROJECT NUMBER: IM 091-2(79)	
FILE NAME: s12a132bdr_rte5.dgn	PLOT DATE: 15-DEC-2014
PROJECT LEADER: K. HIGGINS	DRAWN BY: K. FRIEDLAND
DESIGNED BY: W. LAMMER	CHECKED BY: J. SALVATORI
US 5 LAYOUT SHEET 1	SHEET 26 OF 166

REMOVAL AND DISPOSAL OF GUARDRAIL
STA 350+90.77 - 353+74.00 RT

REMOVING AND RESETTING LIGHT POLE
STA 351+78.39 RT

REMOVING AND RESETTING FENCE
STA 351+06.24 - 351+95.34 RT

VERTICAL GRANITE CURB
STA 351+00.00 + 354+75.00 LT

GRANITE SLOPE EDGING
STA 353+54.40 - 355+73.10 RT
STA 356+04.25 - 356+95.35 RT

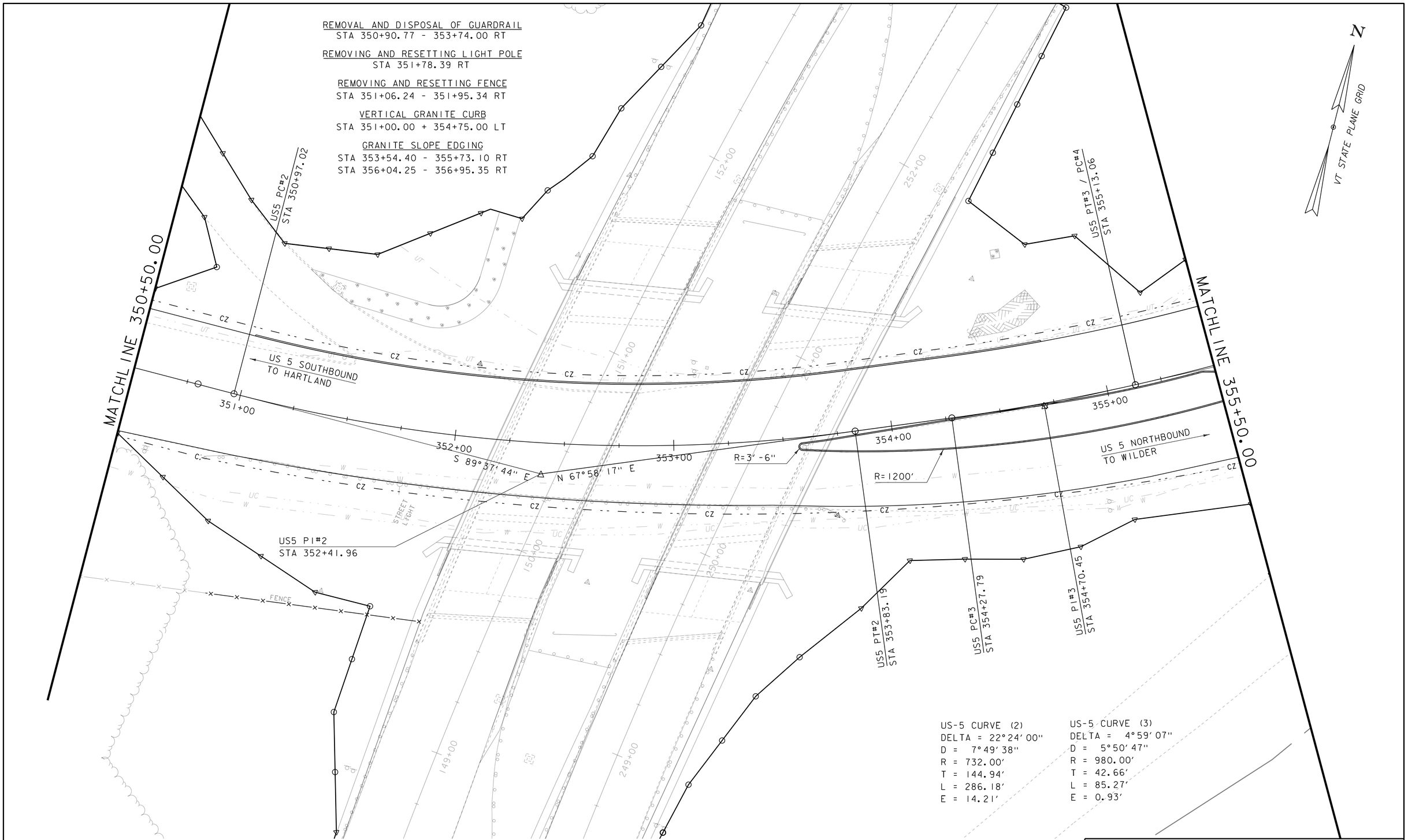

US-5 CURVE (2)
DELTA = 22°24'00"
D = 7°49'38"
R = 732.00'
T = 144.94'
L = 286.18'
E = 14.21'

US-5 CURVE (3)
DELTA = 4°59'07"
D = 5°50'47"
R = 980.00'
T = 42.66'
L = 85.27'
E = 0.93'

US 5 LAYOUT SHEET 2

SCALE 1" = 20'-0"
20 0 20

PROJECT NAME: HARTFORD	
PROJECT NUMBER: IM 091-2(79)	
FILE NAME: s12a132bdr_rte5.dgn	PLOT DATE: 15-DEC-2014
PROJECT LEADER: K. HIGGINS	DRAWN BY: K. FRIEDLAND
DESIGNED BY: W. LAMMER	CHECKED BY: J. SALVATORI
US 5 LAYOUT SHEET 2	SHEET 27 OF 166

GRANITE SLOPE EDGING
STA 356+03.75 - 356+95.86 RT
STA 355+50.00 - 355+74.51 RT

US-5 CURVE (4)
DELTA = 28°39′25″
D = 6°01′52″
R = 950.00′
T = 242.65′
L = 475.15′
E = 30.50′

N
VT STATE PLANE GRID

MATCHLINE 355+50.00

R=225′
R=3′-6″
R=45′
R=5′
R=6′
R=5′
R=16′ (TYP)
R=55′
R=55′

US 5 SOUTHBOUND
TO HARTLAND

356+00
357+00
358+00
359+00
360+00

END PAVEMENT
STA 358+00.00

N 62°59′09″ E
N 34°19′45″ E

US5 PT#4
STA 359+88.21

US5 POE
STA 360+00.00

US5 PI#4
STA 357+55.72

US 5 NORTHBOUND
TO WILDER

CZ
UT
W

US 5 LAYOUT SHEET 3

SCALE 1″ = 20′-0″
20 0 20

PROJECT NAME: HARTFORD	
PROJECT NUMBER: IM 091-2(79)	
FILE NAME: s12a132bdr_rte5.dgn	PLOT DATE: 15-DEC-2014
PROJECT LEADER: K. HIGGINS	DRAWN BY: K. FRIEDLAND
DESIGNED BY: W. LAMMER	CHECKED BY: J. SALVATORI
US 5 LAYOUT SHEET 3	SHEET 28 OF 166

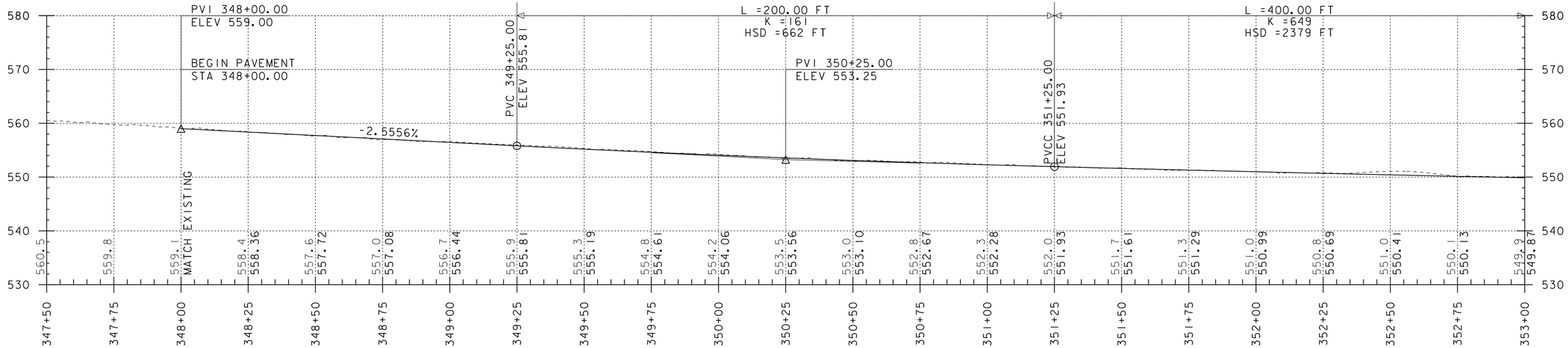

US 5 PROFILE
(STA 347+50 - 353+00)

HOR. SCALE 1" = 20'-0"
VER. SCALE 1" = 10'-0"

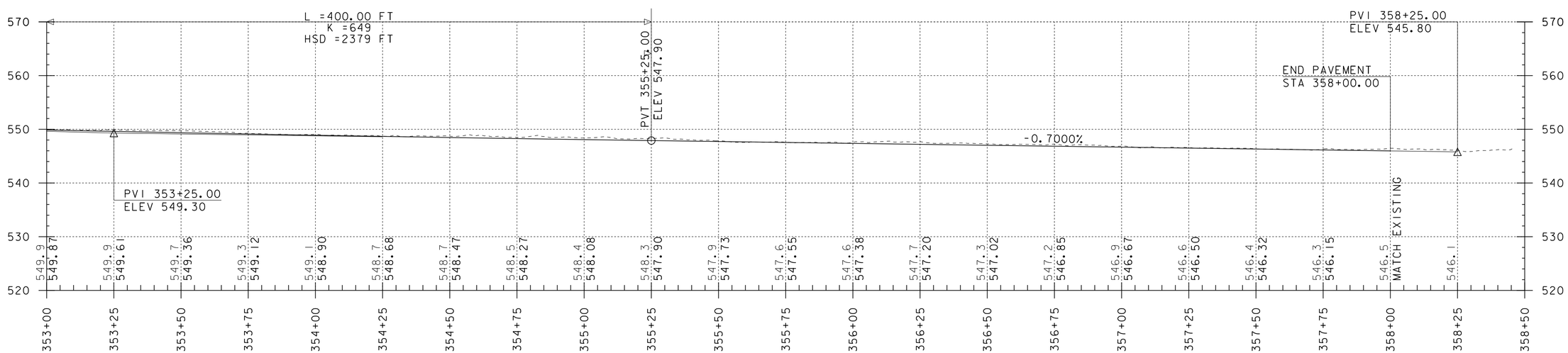

US 5 PROFILE
(STA 353+00 - 358+50)

HOR. SCALE 1" = 20'-0"
VER. SCALE 1" = 10'-0"

EXISTING GROUND IS FROM LIDAR IMAGERY.

THE GRADES SHOWN TO THE NEAREST TENTH ARE THE EXISTING GROUND ELEVATIONS ALONG THE PROPOSED ALIGNMENT.

THE GRADES SHOWN TO THE NEAREST HUNDREDTH ARE THE FINISHED GROUND ELEVATIONS ALONG THE PROPOSED ALIGNMENT.

PROJECT NAME: HARTFORD	
PROJECT NUMBER: IM 091-2(79)	
FILE NAME: s12a132profile.dgn	PLOT DATE: 15-DEC-2014
PROJECT LEADER: K. HIGGINS	DRAWN BY: K. FRIEDLAND
DESIGNED BY: W. LAMMER	CHECKED BY: J. SALVATORI
US 5 PROFILE	SHEET 29 OF 166

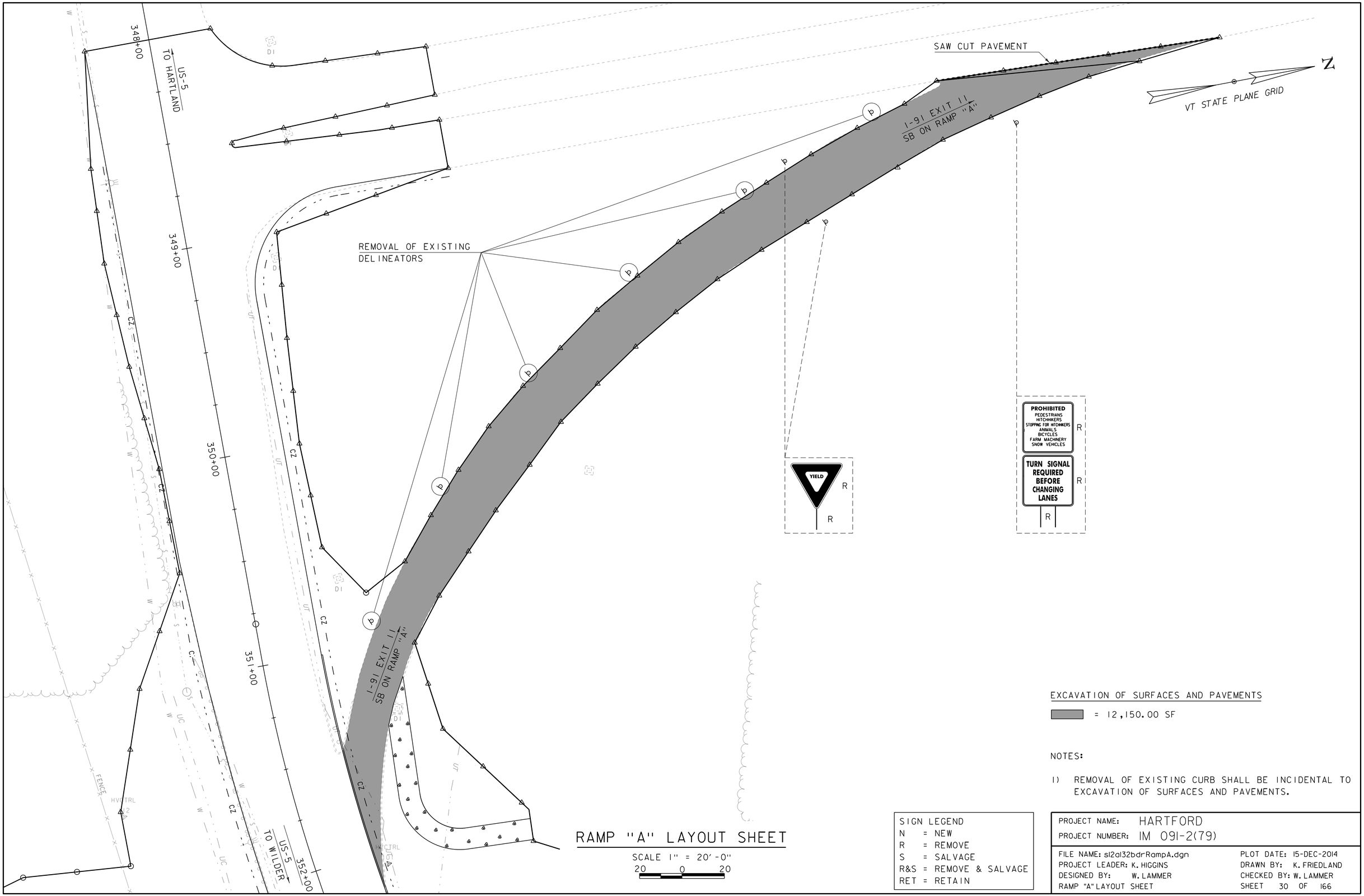

EXCAVATION OF SURFACES AND PAVEMENTS

= 12,150.00 SF

NOTES:

1) REMOVAL OF EXISTING CURB SHALL BE INCIDENTAL TO EXCAVATION OF SURFACES AND PAVEMENTS.

RAMP "A" LAYOUT SHEET

SCALE 1" = 20'-0"

20 0 20

SIGN LEGEND	
N	= NEW
R	= REMOVE
S	= SALVAGE
R&S	= REMOVE & SALVAGE
RET	= RETAIN

PROJECT NAME: HARTFORD
PROJECT NUMBER: IM 091-2(79)

FILE NAME: s12a132bdrRampA.dgn
PROJECT LEADER: K. HIGGINS
DESIGNED BY: W. LAMMER
RAMP "A" LAYOUT SHEET

PLOT DATE: 15-DEC-2014
DRAWN BY: K. FRIEDLAND
CHECKED BY: W. LAMMER
SHEET 30 OF 166

FLOW OF TRAFFIC

RETROREFLECTIVE PLASTIC DRUM

FLASHING ARROW PANEL

ENERGY ABSORPTION ATTENUATOR

TYPE III BARRICADE

TYPE III (MOD.) BARRICADE

PAVEMENT MARKING REMOVAL

I-91 SB TRAFFIC CONTROL PLAN 1

(LEFT LANE CLOSURE)

SCALE 1" = 50'-0"

50 0 50

NOTE TO REVIEWER. THIS SHEET IS FOR ESTIMATING PURPOSES ONLY. CONTRACTOR IS TO FOLLOW THE APPRORIATE T STANDARDS.

PROJECT NAME: HARTFORD

PROJECT NUMBER: IM 091-2(79)

FILE NAME: s12a132detour91_bdr_south.dgn

PROJECT LEADER: K. HIGGINS

DESIGNED BY: J. SALVATORI

I-91SB TRAFFIC CONTROL PLAN 1

PLOT DATE: 15-DEC-2014

DRAWN BY: J. SALVATORI

CHECKED BY: M. MILLER

SHEET 31 OF 166

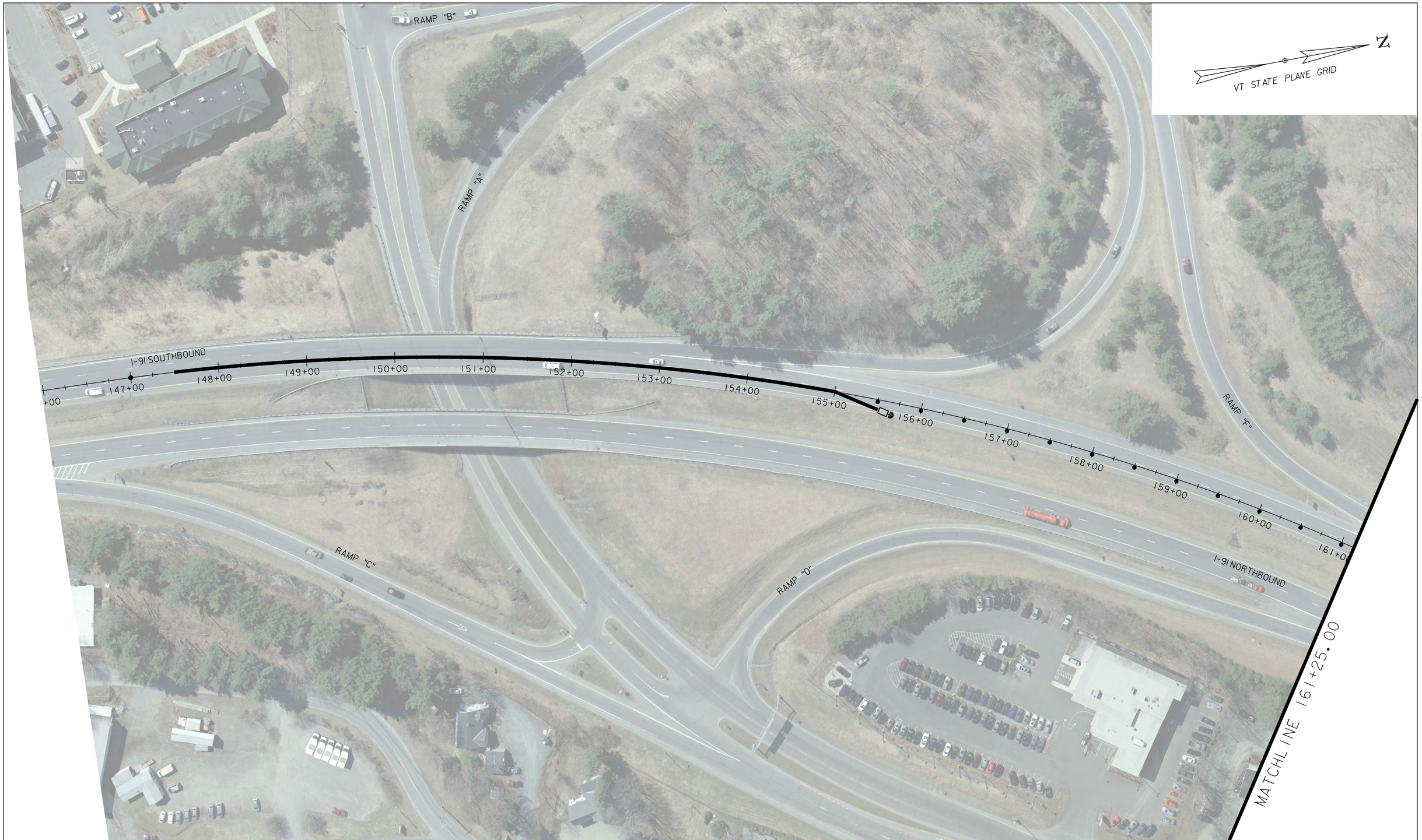

I-91 SB TRAFFIC CONTROL PLAN 2

(LEFT LANE CLOSURE)

SCALE 1" = 50'-0"

50 0 50

NOTE TO REVIEWER. THIS SHEET IS FOR ESTIMATING PURPOSES ONLY. CONTRACTOR IS TO FOLLOW THE APPRORIATE T STANDARDS.

PROJECT NAME: HARTFORD
PROJECT NUMBER: IM 091-2(79)

FILE NAME: s12a132detour91_bdr_south.dgn
PROJECT LEADER: K. HIGGINS
DESIGNED BY: J. SALVATORI
I-91 SB TRAFFIC CONTROL PLAN 2

PLOT DATE: 15-DEC-2014
DRAWN BY: J. SALVATORI
CHECKED BY: M. MILLER
SHEET 32 OF 166

I-91 SB TRAFFIC CONTROL PLAN 3
(DURING BRIDGE CLOSURE)

SCALE 1" = 50'-0"
50 0 50

NOTE TO REVIEWER. THIS SHEET IS FOR ESTIMATING PURPOSES ONLY. CONTRACTOR IS TO FOLLOW THE APPRORIATE T STANDARDS.

PROJECT NAME: HARTFORD	
PROJECT NUMBER: IM 091-2(79)	
FILE NAME: s12a132detour91_bdr_south.dgn	PLOT DATE: 15-DEC-2014
PROJECT LEADER: K. HIGGINS	DRAWN BY: J. SALVATORI
DESIGNED BY: J. SALVATORI	CHECKED BY: M. MILLER
I-91 SB TRAFFIC CONTROL PLAN 3	SHEET 33 OF 166

FOR ADDITIONAL DETAILS SEE STANDARDS
T-1, T-20 AND T-28

I-91SB TRAFFIC CONTROL PLAN 4
(DURING BRIDGE CLOSURE)

SCALE 1" = 50'-0"
50 0 50

NOTE TO REVIEWER. THIS SHEET IS FOR ESTIMATING PURPOSES ONLY. CONTRACTOR IS TO FOLLOW THE APPRORIATE T STANDARDS.

PROJECT NAME: HARTFORD
PROJECT NUMBER: IM 091-2(79)

FILE NAME: s12a132detour91_bdr_south.dgn
PROJECT LEADER: K. HIGGINS
DESIGNED BY: J. SALVATORI
I-91 SB TRAFFIC CONTROL PLAN 4

PLOT DATE: 15-DEC-2014
DRAWN BY: J. SALVATORI
CHECKED BY: M. MILLER
SHEET 34 OF 166

FLOW OF TRAFFIC

RETROREFLECTIVE PLASTIC DRUM

FLASHING ARROW PANEL

ENERGY ABSORPTION ATTENUATOR

TYPE III BARRICADE

TYPE III (MOD.) BARRICADE

PAVEMENT MARKING REMOVAL

I-91 NB TRAFFIC CONTROL PLAN I

(LEFT LANE CLOSURE)

SCALE 1" = 50'-0"

50 0 50

NOTE TO REVIEWER. THIS SHEET IS FOR ESTIMATING PURPOSES ONLY. CONTRACTOR IS TO FOLLOW THE APPRORIATE T STANDARDS.

PROJECT NAME: HARTFORD

PROJECT NUMBER: IM 091-2(79)

FILE NAME: s12a132detour91_bdr_north.dgn

PROJECT LEADER: K. HIGGINS

DESIGNED BY: J. SALVATORI

I-91 NB TRAFFIC CONTROL PLAN I

PLOT DATE: 15-DEC-2014

DRAWN BY: J. SALVATORI

CHECKED BY: M. MILLER

FOR ADDITIONAL DETAILS SEE STANDARDS
T-1, T-11, T-12, T-13 AND T-31

I-91 NB TRAFFIC CONTROL PLAN 2
(LEFT LANE CLOSURE)

SCALE 1" = 50'-0"
50 0 50

NOTE TO REVIEWER. THIS SHEET IS FOR ESTIMATING PURPOSES ONLY. CONTRACTOR IS TO FOLLOW THE APPRORIATE T STANDARDS.

PROJECT NAME: HARTFORD
PROJECT NUMBER: IM 091-2(79)

FILE NAME: s12a132detour91_bdr_north.dgn
PROJECT LEADER: K. HIGGINS
DESIGNED BY: J. SALVATORI
I-91 NB TRAFFIC CONTROL PLAN 2

PLOT DATE: 15-DEC-2014
DRAWN BY: J. SALVATORI
CHECKED BY: M. MILLER
SHEET 36 OF 166

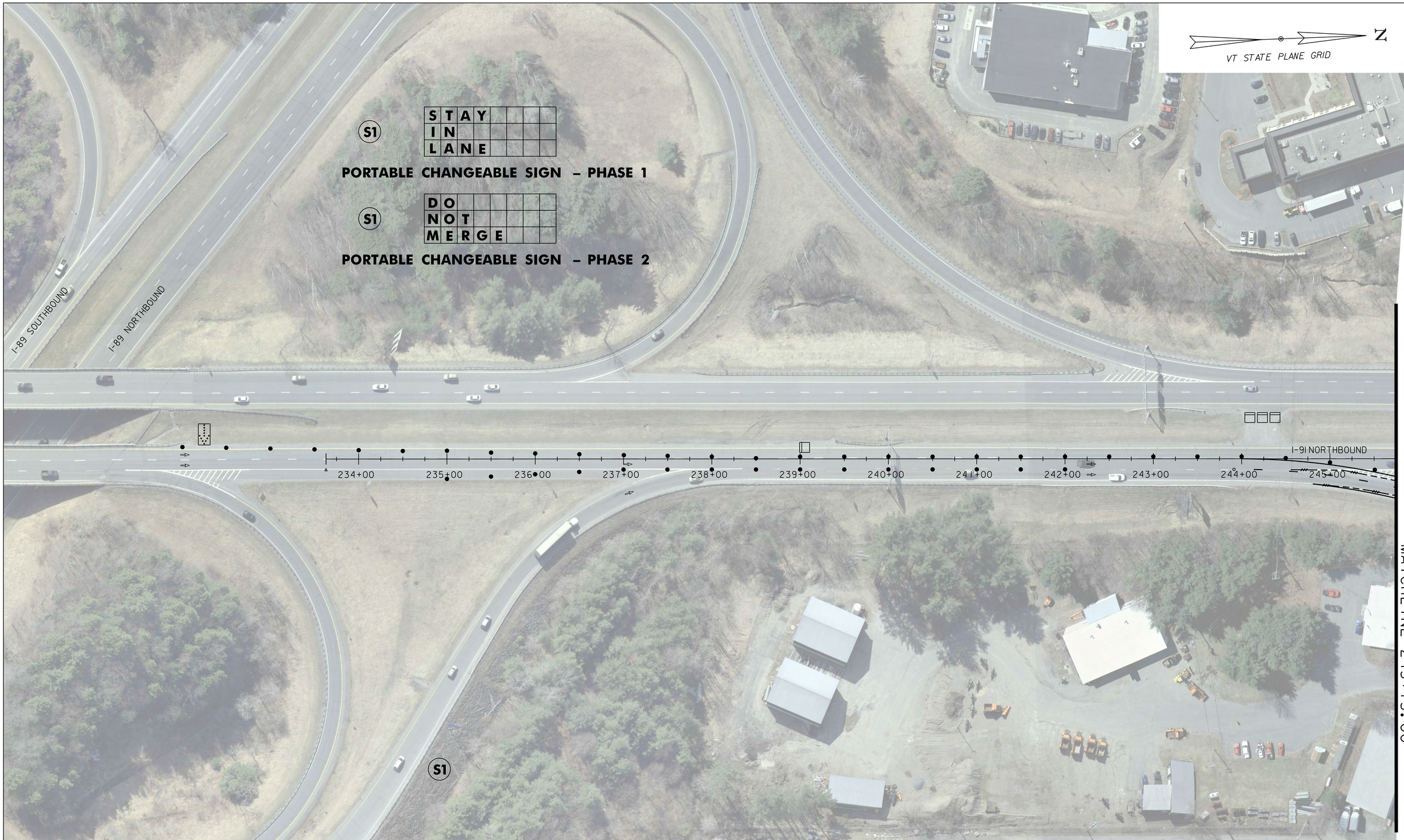

FOR ADDITIONAL DETAILS SEE STANDARDS
T-1, T-20 AND T-28

I-91 NB TRAFFIC CONTROL PLAN 3
(DURING BRIDGE CLOSURE)

SCALE 1" = 50'-0"
50 0 50

PROJECT NAME: HARTFORD	
PROJECT NUMBER: IM 091-2(79)	
FILE NAME: s12a132detour91_bdr_north.dgn	PLOT DATE: 15-DEC-2014
PROJECT LEADER: K. HIGGINS	DRAWN BY: J. SALVATORI
DESIGNED BY: J. SALVATORI	CHECKED BY: M. MILLER
I-91 NB TRAFFIC CONTROL PLAN 3	SHEET 37 OF 166

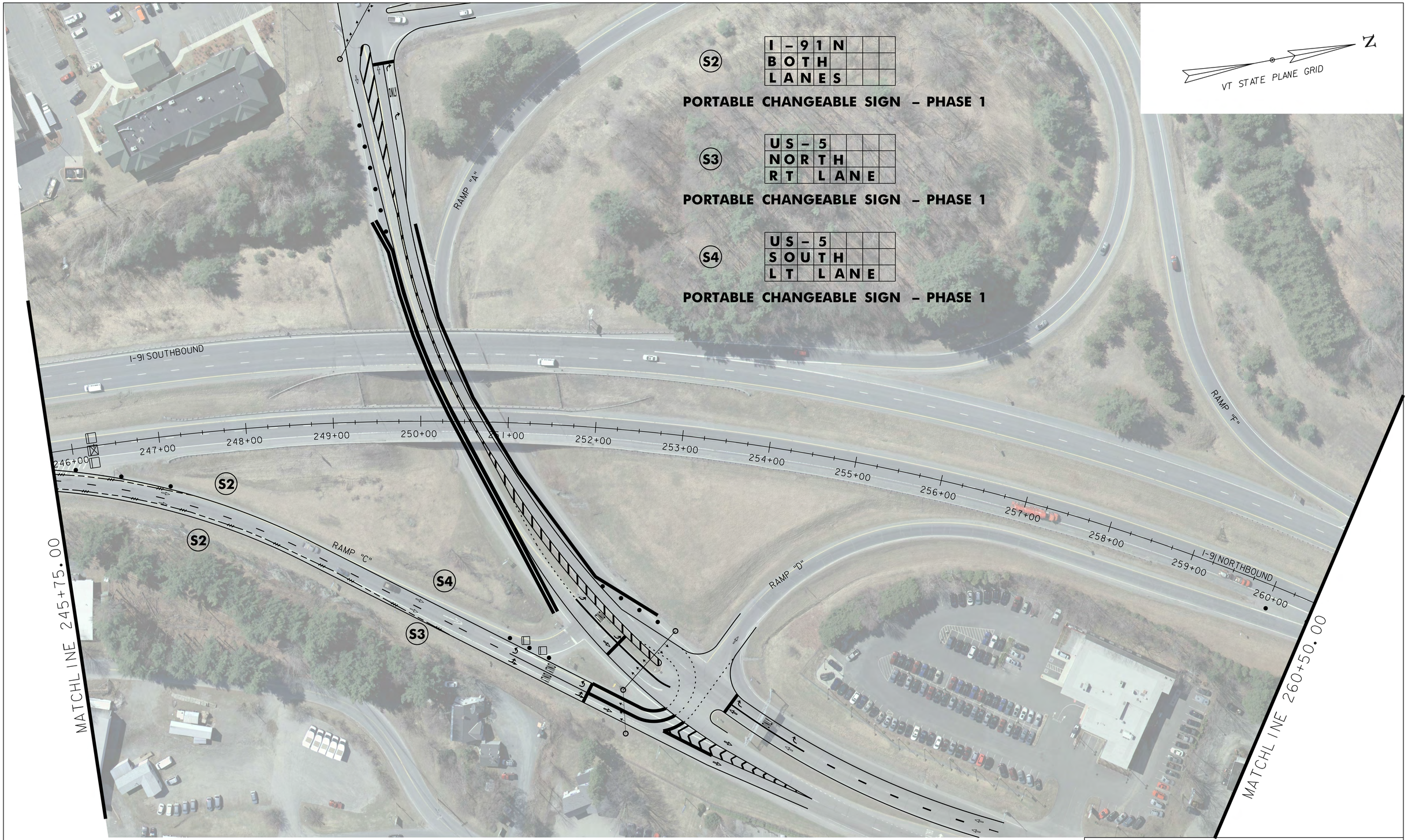

I-91 NB TRAFFIC CONTROL PLAN 4
(DURING BRIDGE CLOSURE)

SCALE 1" = 50'-0"

50 0 50

PROJECT NAME: HARTFORD	
PROJECT NUMBER: IM 091-2(79)	
FILE NAME: s12a132detour91_bdr_north.dgn	PLOT DATE: 15-DEC-2014
PROJECT LEADER: K. HIGGINS	DRAWN BY: J. SALVATORI
DESIGNED BY: J. SALVATORI	CHECKED BY: M. MILLER
I-91NB TRAFFIC CONTROL PLAN 4	SHEET 38 OF 166

I-91 NB TRAFFIC CONTROL PLAN 5
(DURING BRIDGE CLOSURE)

SCALE 1" = 50'-0"
50 0 50

PROJECT NAME: HARTFORD	
PROJECT NUMBER: IM 091-2(79)	
FILE NAME: s12a132detour91_bdr_north.dgn	PLOT DATE: 15-DEC-2014
PROJECT LEADER: K. HIGGINS	DRAWN BY: J. SALVATORI
DESIGNED BY: J. SALVATORI	CHECKED BY: M. MILLER
I-91 NB TRAFFIC CONTROL PLAN 5	SHEET 39 OF 166

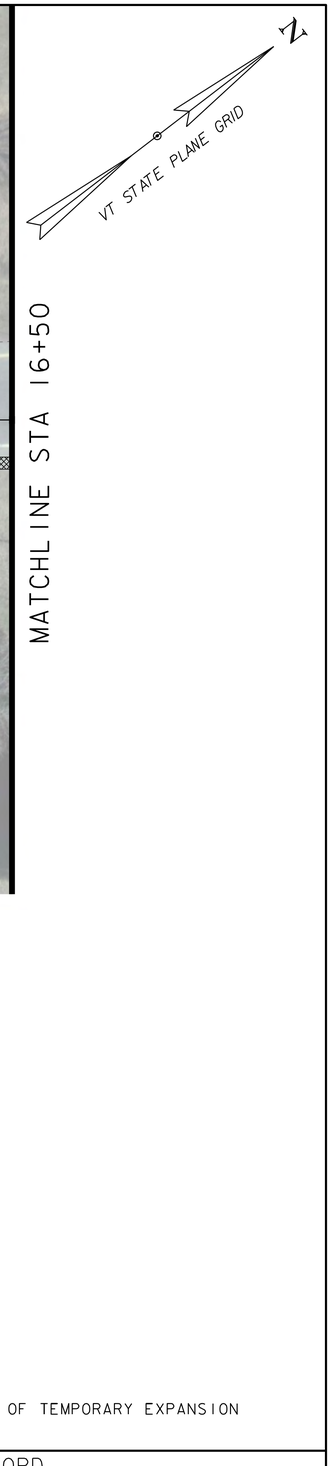

RAMP C LAYOUT 1

SCALE 1" = 20'-0"
20 0 20

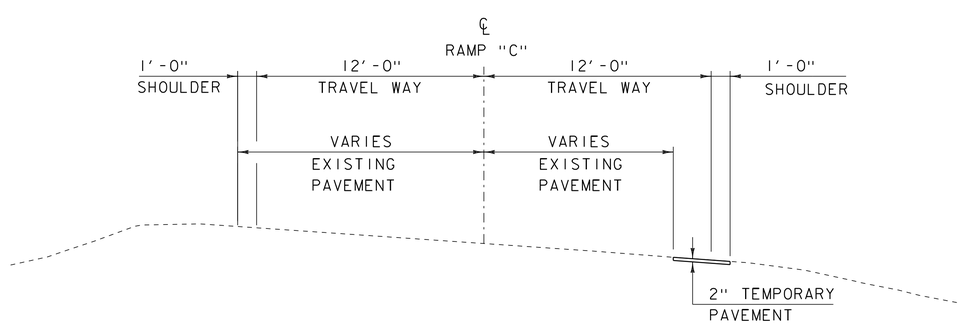

RAMP C TYPICAL SECTION

SCALE: 1/4" = 1'-0"

AREA OF TEMPORARY EXPANSION

PROJECT NAME: HARTFORD	
PROJECT NUMBER: IM 091-2(79)	
FILE NAME: s12a132rampc.dgn	PLOT DATE: 15-DEC-2014
PROJECT LEADER: K. HIGGINS	DRAWN BY: J. SALVATORI
DESIGNED BY: J. SALVATORI	CHECKED BY: ------
RAMP C TEMPORARY EXPANSION 1	SHEET 40 OF 166

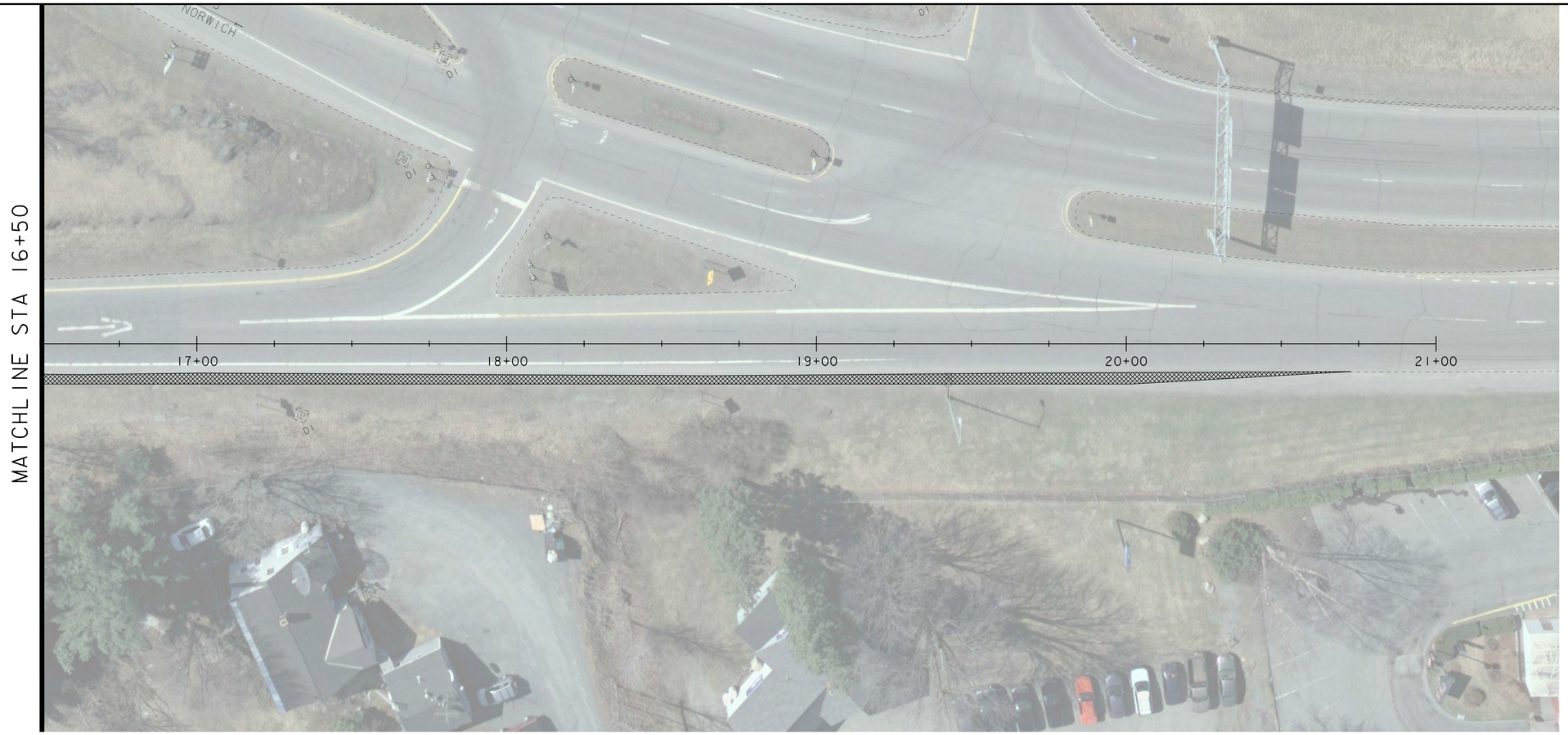

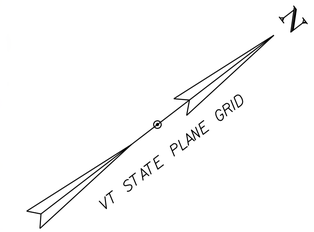

RAMP C LAYOUT 2

SCALE 1" = 20'-0"
20 0 20

AREA OF TEMPORARY EXPANSION

PROJECT NAME: HARTFORD	
PROJECT NUMBER: IM 091-2(79)	
FILE NAME: s12a132rampc.dgn	PLOT DATE: 15-DEC-2014
PROJECT LEADER: K. HIGGINS	DRAWN BY: J. SALVATORI
DESIGNED BY: J. SALVATORI	CHECKED BY: ------
RAMP C TEMPORARY EXPANSION 2	SHEET 41 OF 166

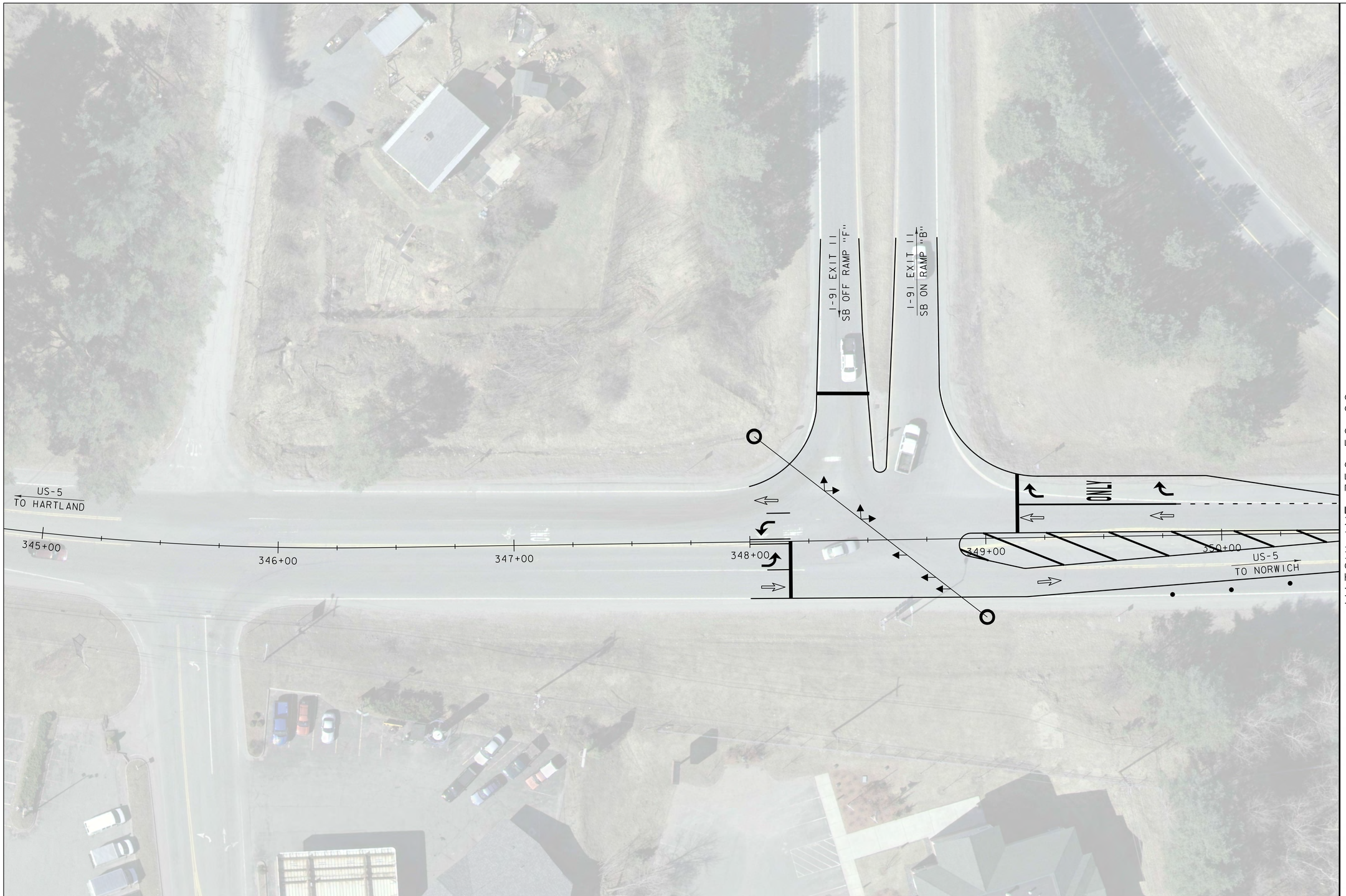

FLOW OF TRAFFIC

RETROREFLECTIVE PLASTIC DRUM

FLASHING ARROW PANEL

TYPE III BARRICADE

TYPE III (MOD.) BARRICADE

PAVEMENT MARKING REMOVAL

US5 TRAFFIC CONTROL PLAN 1
(DURING NON-CLOSURE)

SCALE 1" = 20'-0"
20 0 20

PROJECT NAME: HARTFORD
PROJECT NUMBER: IM 091-2(79)

FILE NAME: s12a132bdr_rte5_tcp.dgn
PROJECT LEADER: K. HIGGINS
DESIGNED BY: J. SALVATORI
US5 TRAFFIC CONTROL PLAN 1

PLOT DATE: 15-DEC-2014
DRAWN BY: J. SALVATORI
CHECKED BY: M. MILLER
SHEET 42 OF 166

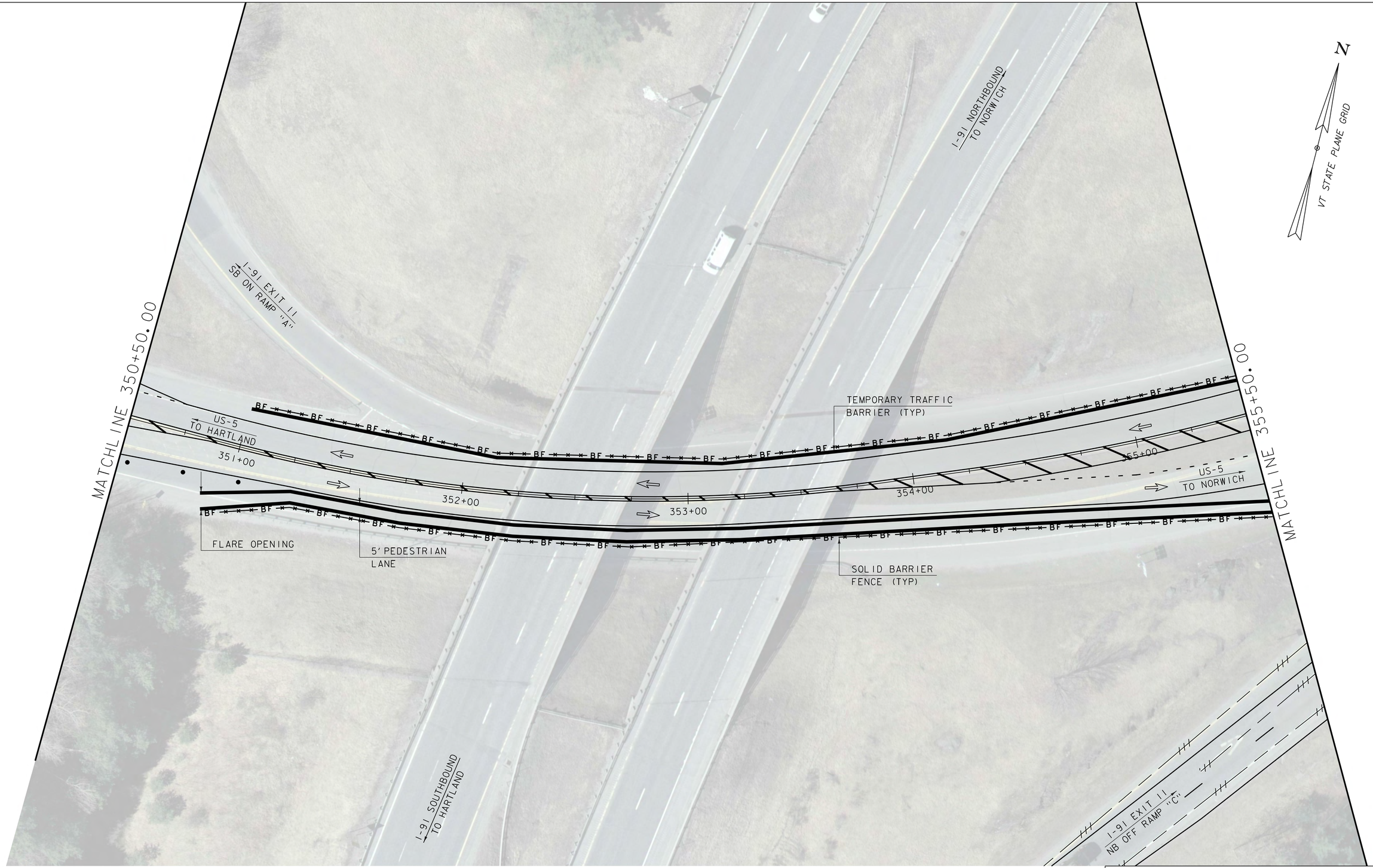

US5 TRAFFIC CONTROL PLAN 2
(DURING NON-CLOSURE)

SCALE 1" = 20'-0"
20 0 20

PROJECT NAME: HARTFORD	
PROJECT NUMBER: IM 091-2(79)	
FILE NAME: s12a132bdr_rte5_tcp.dgn	PLOT DATE: 15-DEC-2014
PROJECT LEADER: K. HIGGINS	DRAWN BY: J. SALVATORI
DESIGNED BY: J. SALVATORI	CHECKED BY: M. MILLER
US5 TRAFFIC CONTROL PLAN 2	SHEET 43 OF 166

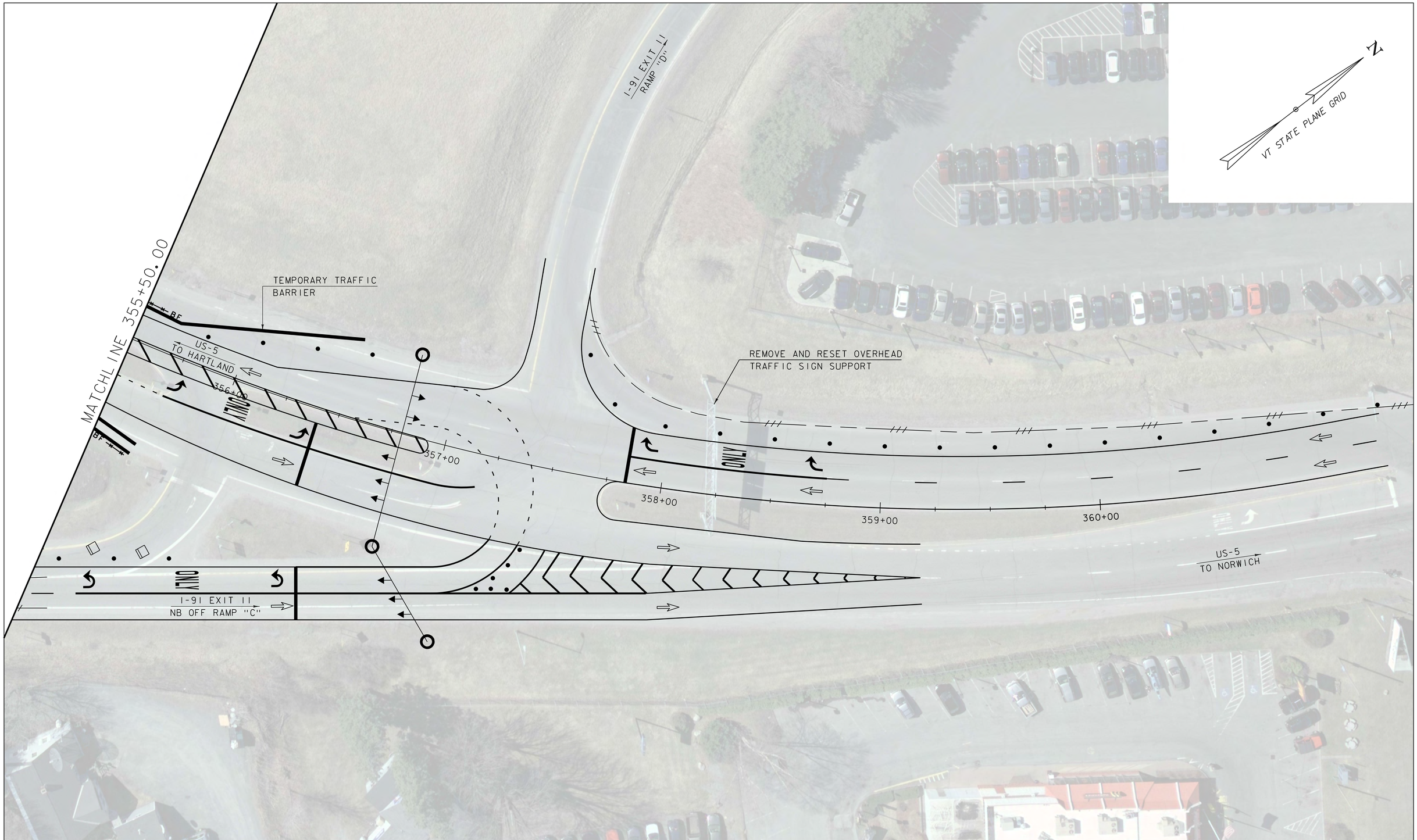

US5 TRAFFIC CONTROL PLAN 3
(DURING NON-CLOSURE)

SCALE 1" = 20'-0"
20 0 20

PROJECT NAME: HARTFORD	
PROJECT NUMBER: IM 091-2(79)	
FILE NAME: s12a132bdr_rte5_tcp.dgn	PLOT DATE: 15-DEC-2014
PROJECT LEADER: K. HIGGINS	DRAWN BY: J. SALVATORI
DESIGNED BY: J. SALVATORI	CHECKED BY: M. MILLER
US5 TRAFFIC CONTROL PLAN 3	SHEET 44 OF 166

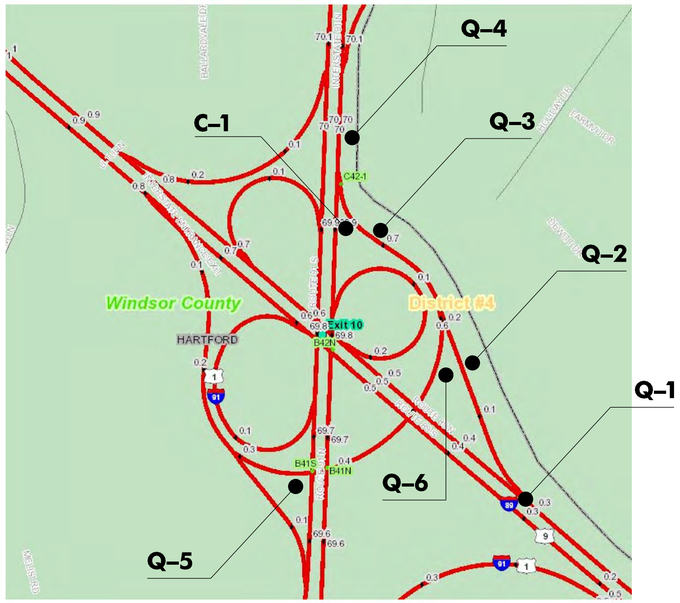

EXIT 10 INSET

NOT TO SCALE

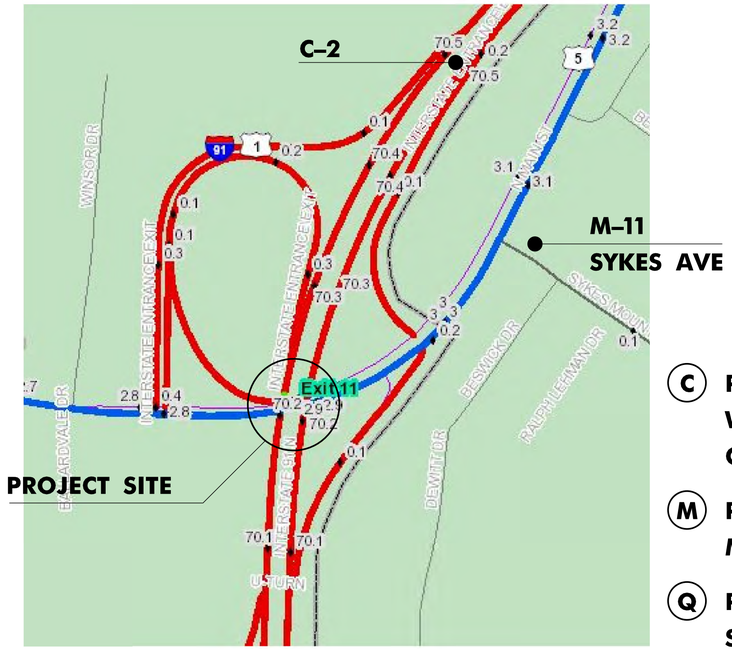

EXIT 11 INSET

NOT TO SCALE

Ⓒ PORTABLE VIDEO TRAILER WITH PAN TILT ZOOM CAMERA (PTZ)

Ⓜ PORTABLE CHANGEABLE MESSAGE SIGN (PCMS)

Ⓠ PORTABLE QUEUE TRAILER SENSOR (PQT)

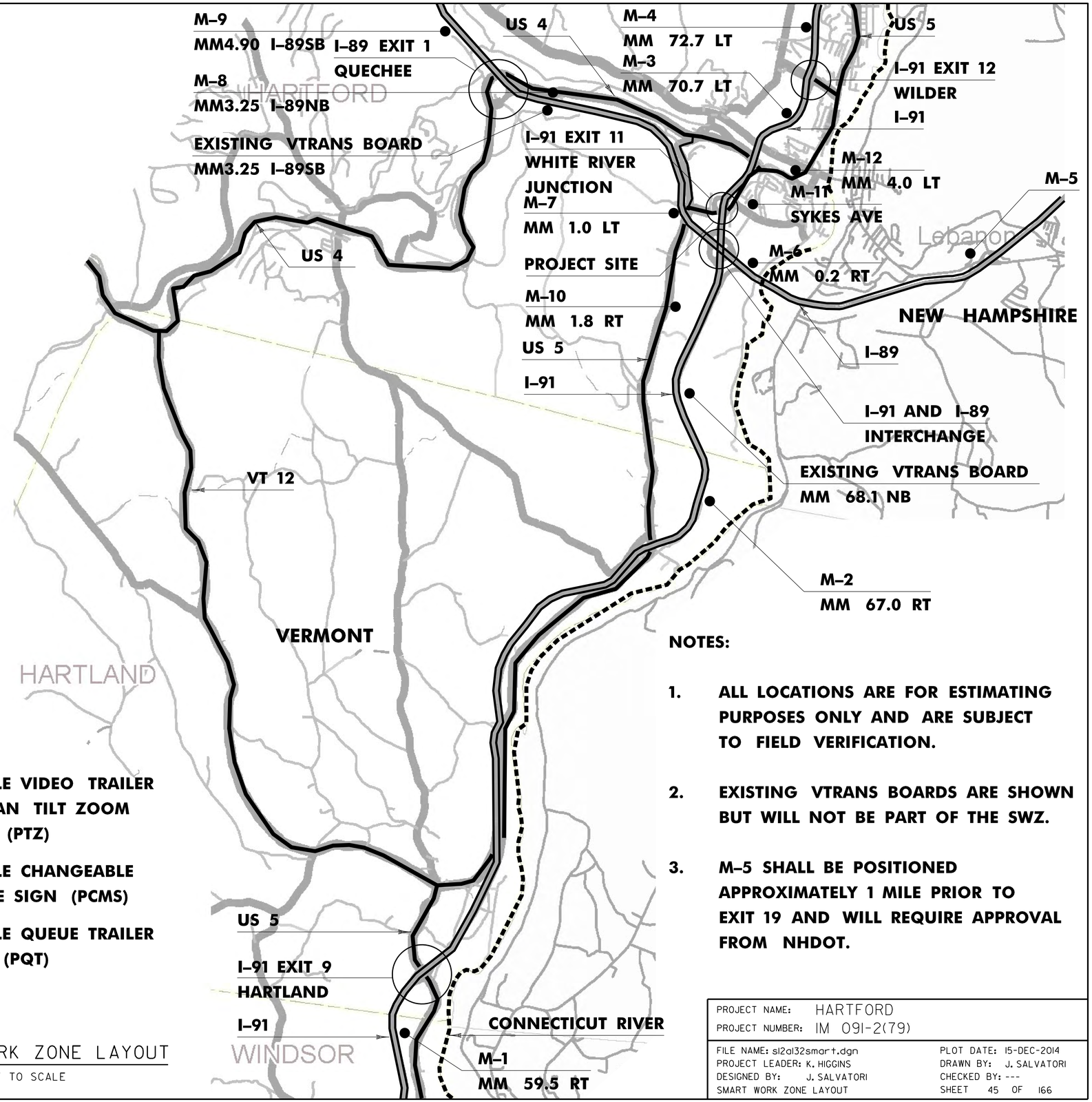

NOTES:

1. ALL LOCATIONS ARE FOR ESTIMATING PURPOSES ONLY AND ARE SUBJECT TO FIELD VERIFICATION.

2. EXISTING VTRANS BOARDS ARE SHOWN BUT WILL NOT BE PART OF THE SWZ.

3. M–5 SHALL BE POSITIONED APPROXIMATELY 1 MILE PRIOR TO EXIT 19 AND WILL REQUIRE APPROVAL FROM NHDOT.

SMART WORK ZONE LAYOUT

NOT TO SCALE

PROJECT NAME: HARTFORD	
PROJECT NUMBER: IM 091-2(79)	
FILE NAME: sl2al32smart.dgn	PLOT DATE: 15-DEC-2014
PROJECT LEADER: K. HIGGINS	DRAWN BY: J. SALVATORI
DESIGNED BY: J. SALVATORI	CHECKED BY: ---
SMART WORK ZONE LAYOUT	SHEET 45 OF 166

MESSAGE 1

W	O	R	K			
Z	O	N	E			
A	H	E	A	D		

PHASE I

E	X	P	E	C	T	
D	E	L	A	Y	S	

PHASE II

MESSAGE SHALL BE SET AS DEFAULT MESSAGE AND SHALL BE DISPLAYED DURING WORK HOURS.

MESSAGE 2

C	R	A	S	H		
A	H	E	A	D		

PHASE I

B	E					
P	R	E	P	A	R	E	D
T	O		S	T	O	P	

PHASE II

MESSAGE SHALL BE DISPLAYED ON PCMS WHENEVER THERE IS A VEHICULAR CRASH WITHIN THE PROJECT LIMITS.

MESSAGE 3

U	S	E		I	-	8	9
E	X	I	T		1		
W	O	O	D	S	T	C	K

PHASE I

F	O	R		A	L	T	
R	O	U	T	E			
T	O		I	-	9	1	N

PHASE II

MESSAGE SHALL BE DISPLAYED ON I-89 NORTHBOUND PCMS (M-5 & M-6) WHENEVER TRAFFIC IS QUEUED AT INTERCHANGE ONTO I-89.

MESSAGE 4

N	O			L	E	F	T
T	U	R	N				

PHASE I

MESSAGE SHALL BE DISPLAYED ON SYKES AVE PCMS (M-11) WHENEVER TRAFFIC DELAYED ON ROUTE 5.

PROJECT NAME: HARTFORD	
PROJECT NUMBER: IM 091-2(79)	
FILE NAME: s12a132smart.dgn	PLOT DATE: 15-DEC-2014
PROJECT LEADER: K. HIGGINS	DRAWN BY: J. SALVATORI
DESIGNED BY: J. SALVATORI	CHECKED BY: ---
SMART WORK ZONE DETAILS	SHEET 46 OF 166

LIST OF MAJOR EQUIPMENT

EQUIPMENT ITEM 678.40	QUANTITY
POWER METER ON STANCHION	1
BREAKER PANEL ON STANCHION	1
TRAFFIC SIGNAL CONTROLLER (NEMA TS2)	1
NEMA POLE MOUNTED CONTROLLER CABINET WITH ANCILLARY CONTROL EQUIPMENT	1
WESTERN RED CEDAR OR SOUTHERN PINE WOODEN STRAIN POLE	2
ONE WAY, 3-SECTION, 12-INCH POLYCARBONATE LED TRAFFIC SIGNAL HEAD WITH TUNNEL VISORS AND 5" LOUVERED BACK-PLATES	6
ONE WAY, 4-SECTION, 12-INCH POLYCARBONATE LED TRAFFIC SIGNAL HEAD WITH TUNNEL VISORS AND 5" LOUVERED BACK-PLATES	1
SPECIAL PROVISION, (GPS TIME CLOCK)	1
STOP BAR DETECTOR	3

CONTROLLER TIMING CHART

US ROUTE 5 & SOUTHBOUND RAMPS								
	5NL	5ST		91S		5NT		
PHASE	1	2	3	4	5	6	7	8
TRAFFIC MOVEMENT	↗	←		↙ ↘		→		
MINIMUM GREEN	5	10		7		10		
MAXIMUM 1 GREEN	15	45		20		45		
MAXIMUM 2 GREEN	30	50		20		50		
MAXIMUM 3 GREEN	25	40		60		40		
YELLOW CLEARANCE	4.0	4.0		4.0		4.0		
ALL RED CLEARANCE	2.0	2.0		2.0		2.0		
VEH. EXTENSION	3.0	3.0		3.0		3.0		
RECALL MODE	OFF	MIN		OFF		MIN		

NOTES:

1) CONTROLLER SHALL BE INITIALLY PROGRAMMED AND FINE-TUNED BASED ON PREVAILING FIELD CONDITIONS FOR MAXIMUM 1, MAXIMUM 2, AND COORDINATOR PROGRAMMING BY TIME-OF-DAY DURING NON-CLOSURE.

2 CONTROLLER SHALL BE INITIALLY PROGRAMMED AND FINE-TUNED BASED ON PREVAILING FIELD CONDITIONS FOR MAXIMUM 3 PROGRAMMING 24 / 7 DURING CLOSURE.

SIGNAL FACE ARRANGEMENT W/PHASE NUMBERS

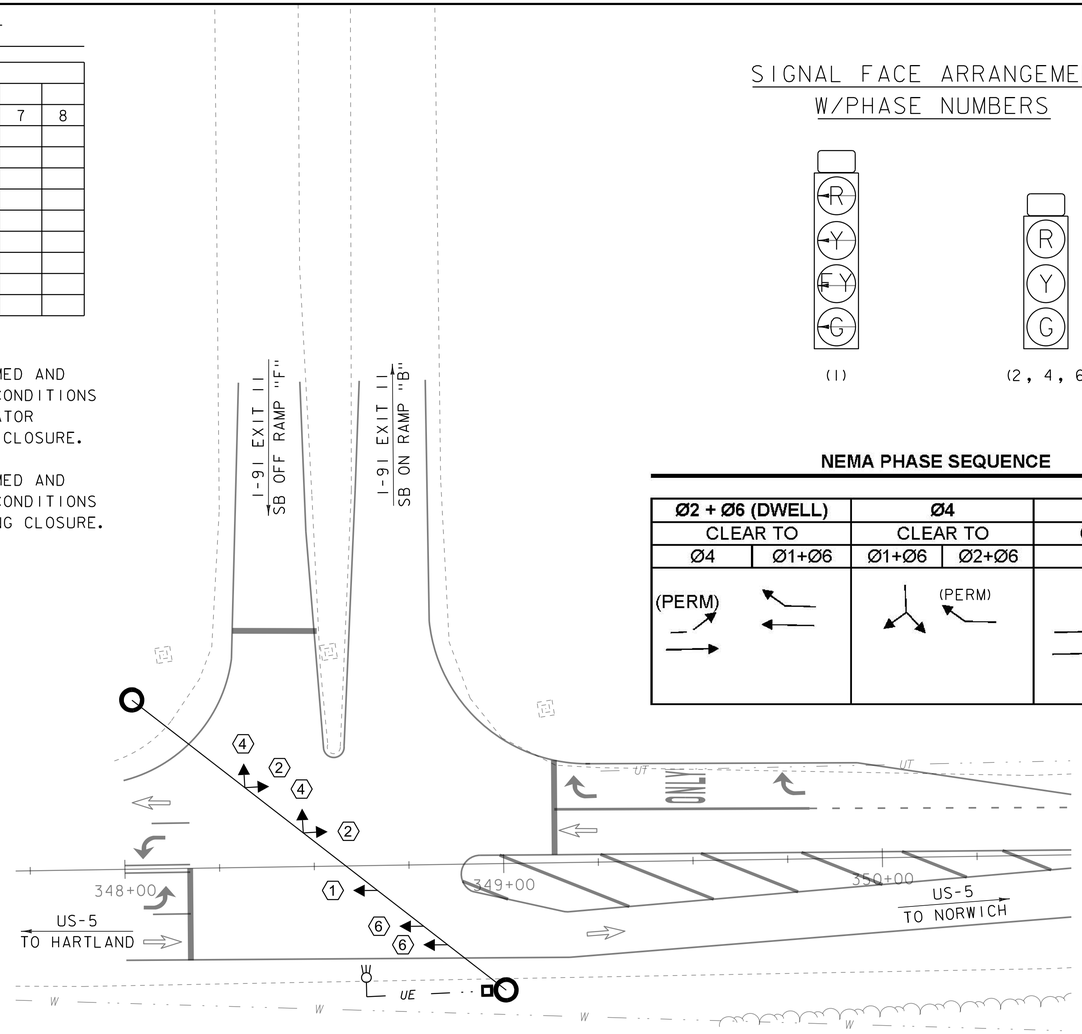

NEMA PHASE SEQUENCE

Ø2 + Ø6 (DWELL)		Ø4		Ø1 + Ø6
CLEAR TO		CLEAR TO		CLEAR TO
Ø4	Ø1+Ø6	Ø1+Ø6	Ø2+Ø6	Ø2+Ø6
(PERM)			(PERM)	

US 5/SB RAMPS — NIC/TOD STEP PROGRAMMING PERIODS OF OPERATION (NON-CLOSURE)

WEEK PROG	SUN	MON	TUE	WED	THU	FRI	SAT
WEEK 1	5	6	6	6	6	6	5

STEP	PROGRAM	TIME	C/O/S	FL	MAX 2	MAX 3
1	5	0:00	0/0/1			
2	5	6:00	0/0/1		X	
3	5	10:00	2/1/1			
4	5	17:00	0/0/1		X	
5	6	0:00	0/0/1			
6	6	6:00	1/1/1			
7	6	9:00	2/1/1			
8	6	16:00	3/1/1			
9	6	18:00	0/0/1		X	

COORDINATOR C/O/S PROGRAMMING DATA

	C/O/S 1/1/1		C/O/S 2/1/1		C/O/S 3/1/1	
CYCLE LENGTH	80		80		110	
	SECS	%	SECS	%	SECS	%
OFFSET (Begin Green)	0	0%	13	16%	24	22%
SPLIT TIME Φ1	21	26%	21	26%	36	33%
SPLIT TIME Φ2	33	41%	36	45%	53	48%
SPLIT TIME Φ3	0	0%	0	0%	0	0%
SPLIT TIME Φ4	26	33%	23	29%	21	19%
SPLIT TIME Φ5	0	0%	0	0%	0	0%
SPLIT TIME Φ6	54	68%	57	71%	89	81%
SPLIT TIME Φ7	0	0%	0	0%	0	0%
SPLIT TIME Φ8	0	0%	0	0%	0	0%

COORDINATION NOTES:

1. OFFSET IS REFERENCED TO THE BEGINNING OF THE COORDINATED (Φ2+Φ6) PHASE GREEN.
2. FORCE OFFS SHALL BE SET TO FIXED.

US 5/SB RAMPS — NIC/TOD STEP PROGRAMMING PERIODS OF OPERATION (CLOSURE)

WEEK PROG	SUN	MON	TUE	WED	THU	FRI	SAT
CLOSURER WEEK 2	2	2	2	2	2	2	2

STEP	PROGRAM	TIME	C/O/S	FL	MAX 2	MAX 3
10	2	0:00	0/0/1			X

LEGEND

- CONTROLLER CABINET
- EXISTING STREET LIGHT
- SIGNAL HEAD AND PHASE NUMBER
- STRAIN POLE
- UE — UNDERGROUND ELECTRICAL CONDUIT

US5 TEMPORARY TRAFFIC SIGNAL PLAN 1

SCALE 1" = 20'-0"
20 0 20

PROJECT NAME: HARTFORD
PROJECT NUMBER: IM 091-2(79)

FILE NAME: s12a132bdr_rte5_sig.dgn
PROJECT LEADER: K. HIGGINS
DESIGNED BY: J. SALVATORI
US5 TEMPORARY TRAFFIC SIGNAL PLAN 1

PLOT DATE: 15-DEC-2014
DRAWN BY: J. SALVATORI
CHECKED BY: I. DEGUTIS
SHEET 47 OF 166

US 5/NB RAMPS

NIC/TOD STEP PROGRAMMING PERIODS OF OPERATION (NON-CLOSURE)

WEEK PROG	SUN	MON	TUE	WED	THU	FRI	SAT
WEEK 1	5	6	6	6	6	6	5

STEP	PROGRAM	TIME	C/O/S	FL	MAX 2	MAX 3
1	5	0:00	0/0/1			
2	5	6:00	0/0/1		X	
3	5	10:00	2/1/1			
4	5	17:00	0/0/1		X	
5	6	0:00	0/0/1			
6	6	6:00	1/1/1			
7	6	9:00	2/1/1			
8	6	16:00	3/1/1			
9	6	18:00	0/0/1		X	

COORDINATOR C/O/S PROGRAMMING DATA

	C/O/S 1/1/1		C/O/S 2/1/1		C/O/S 3/1/1	
CYCLE LENGTH	80		80		110	
	SECS	%	SECS	%	SECS	%
OFFSET (Begin Green)	23	29%	22	28%	24	22%
SPLIT TIME Φ1	15	19%	16	20%	18	16%
SPLIT TIME Φ2	28	35%	34	43%	55	50%
SPLIT TIME Φ3	37	46%	30	38%	37	34%
SPLIT TIME Φ4	0	0%	0	0%	0	0%
SPLIT TIME Φ5	0	0%	0	0%	0	0%
SPLIT TIME Φ6	43	54%	50	63%	73	66%
SPLIT TIME Φ7	0	0%	0	0%	0	0%
SPLIT TIME Φ8	0	0%	0	0%	0	0%

COORDINATION NOTES:

1. OFFSET IS REFERENCED TO THE BEGINNING OF THE COORDINATED (Φ2+Φ6) PHASE GREEN.
2. FORCE OFFS SHALL BE SET TO FIXED.

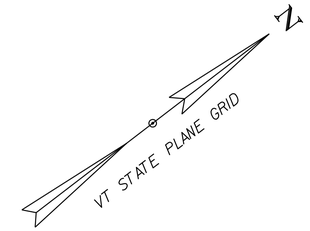

US 5/NB RAMPS

NIC/TOD STEP PROGRAMMING PERIODS OF OPERATION (CLOSURE)

WEEK PROG	SUN	MON	TUE	WED	THU	FRI	SAT
CLOSURER WEEK 2	2	2	2	2	2	2	2

STEP	PROGRAM	TIME	C/O/S	FL	MAX 2	MAX 3
10	2	0:00	0/0/1			X

NEMA PHASE SEQUENCE

Ø2 + Ø6 (DWELL)		Ø3		Ø1 + Ø6
CLEAR TO		CLEAR TO		CLEAR TO
Ø3	Ø1+Ø6	Ø1+Ø6	Ø2+Ø6	Ø2+Ø6
(PERM)				

LIST OF MAJOR EQUIPMENT

EQUIPMENT ITEM 678.40	QUANTITY
POWER METER ON STANCHION	1
BREAKER PANEL ON STANCHION	1
TRAFFIC SIGNAL CONTROLLER (NEMA TS2)	1
NEMA POLE MOUNTED CONTROLLER CABINET WITH ANCILLARY CONTROL EQUIPMENT	1
WESTERN RED CEDAR OR SOUTHERN PINE WOODEN STRAIN POLE	3
ONE WAY, 3-SECTION, 12-INCH POLYCARBONATE LED TRAFFIC SIGNAL HEAD WITH TUNNEL VISORS AND 5" LOUVERED BACK-PLATES	7
ONE WAY, 4-SECTION, 12-INCH POLYCARBONATE LED TRAFFIC SIGNAL HEAD WITH TUNNEL VISORS AND 5" LOUVERED BACK-PLATES	1
SPECIAL PROVISION, (GPS TIME CLOCK)	1
STOP BAR DETECTOR	3

CONTROLLER TIMING CHART

US ROUTE 5 & NORTHBOUND RAMPS								
	5NL	5ST	9IN	9IN		5NT		
PHASE	1	2	3	3A		6	7	8
TRAFFIC MOVEMENT	↗	←	↖	→		→		
MINIMUM GREEN	5	10	10	10		10		
MAXIMUM 1 GREEN	10	40	30	30		40		
MAXIMUM 2 GREEN	15	50	35	35		50		
MAXIMUM 3 GREEN	15	40	60	60		40		
YELLOW CLEARANCE	4.0	4.0	4.0	4.0		4.0		
ALL RED CLEARANCE	2.0	2.0	2.0	2.0		2.0		
VEH. EXTENSION	3.0	3.0	3.0	3.0		3.0		
RECALL MODE	OFF	MIN	OFF	OFF		MIN		

NOTES:

1) CONTROLLER SHALL BE INITIALLY PROGRAMMED AND FINE-TUNED BASED ON PREVAILING FIELD CONDITIONS FOR MAXIMUM 1, MAXIMUM 2, AND COORDINATOR PROGRAMMING BY TIME-OF-DAY DURING NON-CLOSURE.

2) CONTROLLER SHALL BE INITIALLY PROGRAMMED AND FINE-TUNED BASED ON PREVAILING FIELD CONDITIONS FOR MAXIMUM 3 PROGRAMMING 24 / 7 DURING CLOSURE.

SIGNAL FACE ARRANGEMENT W/PHASE NUMBERS

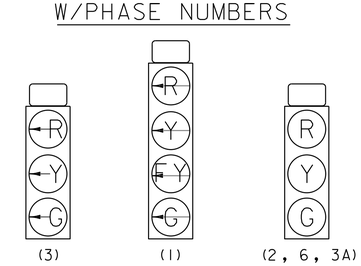

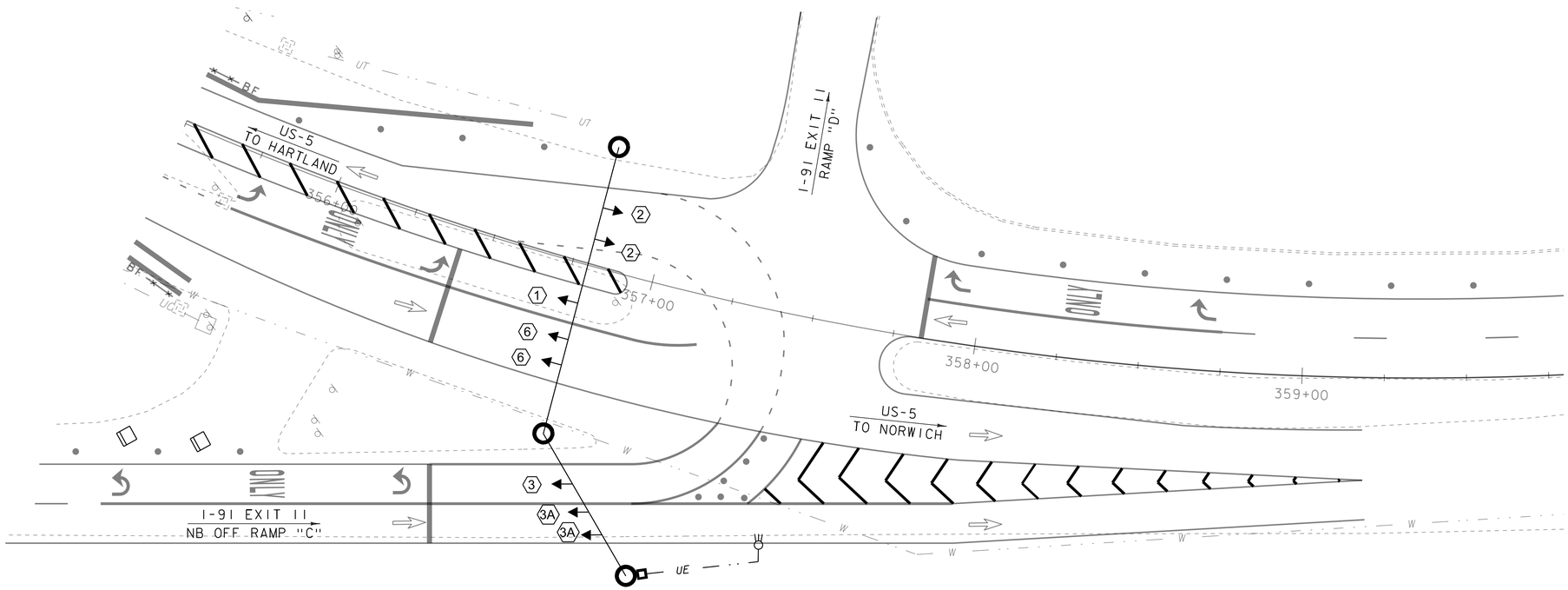

US5 TEMPORARY TRAFFIC SIGNAL PLAN 2

SCALE 1" = 20'-0"

20 0 20

PROJECT NAME: HARTFORD	
PROJECT NUMBER: IM 091-2(79)	
FILE NAME: s12a132bdr_rte5_sig.dgn	PLOT DATE: 15-DEC-2014
PROJECT LEADER: K. HIGGINS	DRAWN BY: J. SALVATORI
DESIGNED BY: J. SALVATORI	CHECKED BY: I. DEGUTIS
US5 TEMPORARY TRAFFIC SIGNAL PLAN 2	SHEET 48 OF 166

US 5/SYKES AVE — **NIC/TOD STEP PROGRAMMING PERIODS OF OPERATION (NON-CLOSURE)**

WEEK PROG	SUN	MON	TUE	WED	THU	FRI	SAT
WEEK 4	5	6	6	6	6	6	5

DAY OF WEEK

STEP	PROGRAM	TIME	C/O/S	FL	MAX 2	MAX 3
18	5	0:00	0/0/1	X		
19	5	6:00	0/0/1		X	
20	5	10:00	2/1/1			
21	5	17:00	0/0/1		X	
22	6	0:00	0/0/1	X		
23	6	6:00	1/1/1			
24	6	9:00	2/1/1			
25	6	16:00	3/1/1			
26	6	18:00	0/0/1		X	

COORDINATOR C/O/S PROGRAMMING DATA

	C/O/S 1/1/1		C/O/S 2/1/1		C/O/S 3/1/1	
CYCLE LENGTH	80		80		110	
	SECS	%	SECS	%	SECS	%
OFFSET (Begin Green)	0	0%	0	0%	0	0%
SPLIT TIME Φ1	13	16%	13	16%	16	15%
SPLIT TIME Φ2	39	49%	36	45%	44	40%
SPLIT TIME Φ3	0	0%	0	0%	0	0%
SPLIT TIME Φ4	28	35%	31	39%	50	45%
SPLIT TIME Φ5	21	26%	21	26%	26	24%
SPLIT TIME Φ6	31	39%	28	35%	34	31%
SPLIT TIME Φ7	0	0%	0	0%	0	0%
SPLIT TIME Φ8	28	35%	31	39%	50	45%

COORDINATION NOTES:

1. OFFSET IS REFERENCED TO THE BEGINNING OF THE COORDINATED (Φ2+Φ6) PHASE GREEN.
2. FORCE OFFS SHALL BE SET TO FIXED.

US 5/SYKES AVE — **EXISTING NIC/TOD STEP PROGRAMMING PERIODS OF OPERATION (CLOSURE)**

WEEK PROG	SUN	MON	TUE	WED	THU	FRI	SAT
CLOSURER WEEK 3	2	4	4	4	4	4	2

DAY OF WEEK

STEP	PROGRAM	TIME	C/O/S	FL	MAX 2	MAX 3
1	1	0:00	0/0/1	X		
2	1	6:00	0/0/1			
3	1	9:00	0/0/1		X	
4	1	15:00	0/0/1			X
5	1	18:00	0/0/1		X	
6	2	0:00	0/0/1	X		
7	2	6:00	0/0/1		X	
8	3	5:00	0/0/1			
9	3	8:00	0/0/1		X	
10	3	14:00	0/0/1			X
11	3	17:00	0/0/1		X	
12	3	23:00	0/0/1	X		
13	4	1:00	0/0/1	X		
14	4	6:00	0/0/1			
15	4	10:00	0/0/1		X	
16	4	16:00	0/0/1			X
17	4	19:00	0/0/1		X	

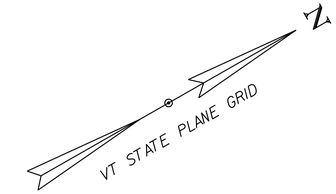

NEMA PHASE SEQUENCE

Ø2 + Ø6 (DWELL)		Ø4 + Ø8		Ø1 + Ø5
CLEAR TO		CLEAR TO		CLEAR TO
Ø4+Ø8	Ø1+Ø5	Ø1+Ø5	Ø2+Ø6	Ø2+Ø6

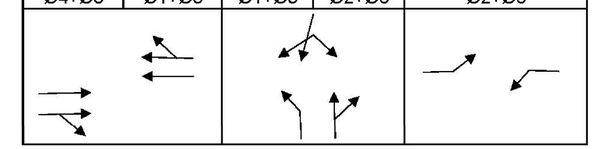

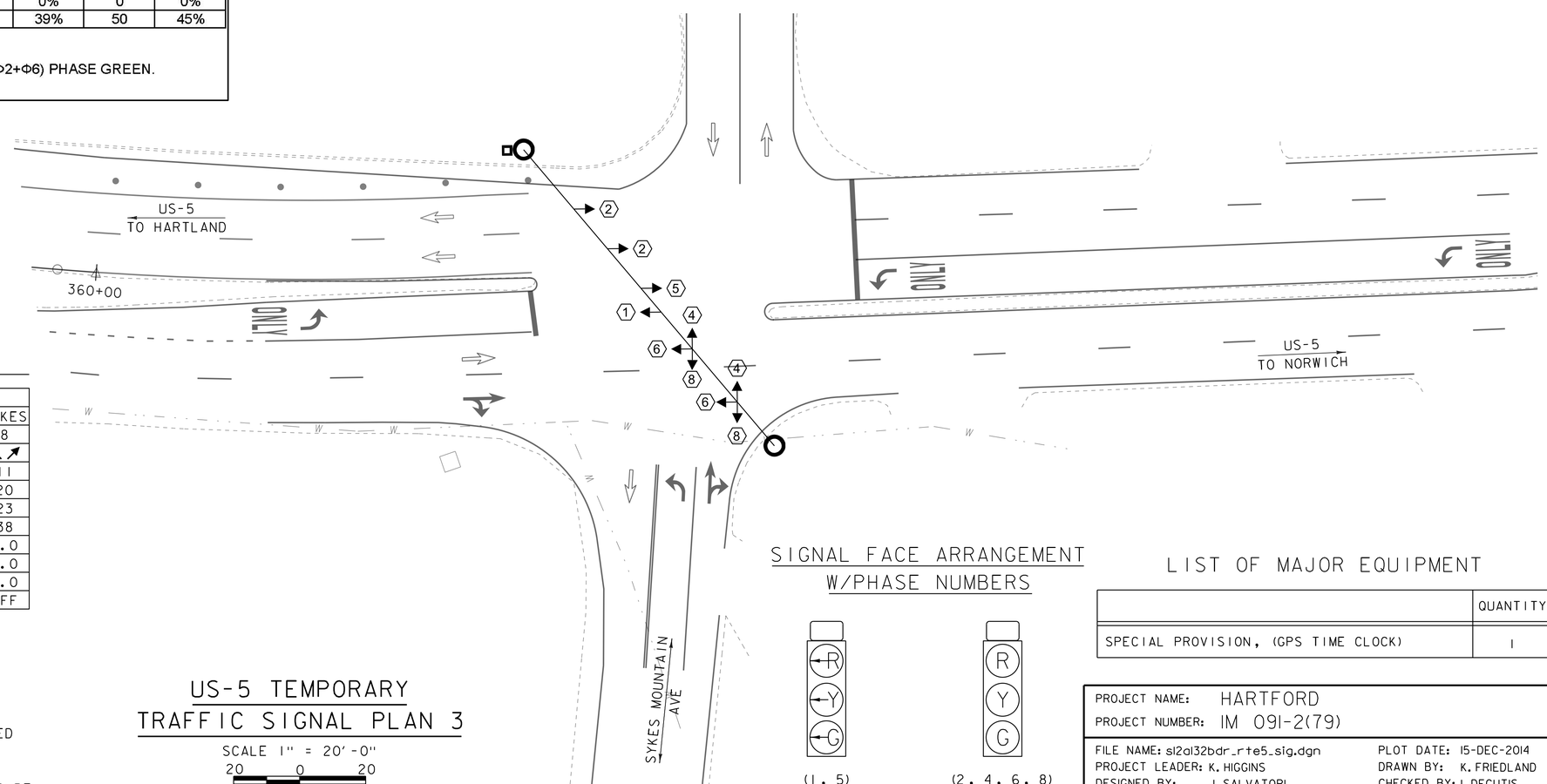

CONTROLLER TIMING CHART

US ROUTE 5 & SYKES MOUNTAIN AVENUE								
	5NL	5ST		UHAUL	5SL	5NT		SYKES
PHASE	1	2	3	4	5	6	7	8
TRAFFIC MOVEMENT	↗	←		↙↘	↙	→		↖↗
MINIMUM GREEN	6	11		11	6	11		11
MAXIMUM 1 GREEN	5	23		20	18	23		20
MAXIMUM 2 GREEN	5	22		23	15	22		23
MAXIMUM 3 GREEN	5	32		38	21	32		38
YELLOW CLEARANCE	4.0	4.0		4.0	4.0	4.0		4.0
ALL RED CLEARANCE	2.0	2.0		3.0	2.0	2.0		3.0
VEH. EXTENSION	1.0	2.0		2.0	1.0	2.0		2.0
RECALL MODE	OFF	MIN		OFF	OFF	MIN		OFF

NOTES:

1) CONTROLLER SHALL REVERT BACK TO EXISTING TIME-OF-DAY PROGRAMMING FOR MAXIMUM 1 OR FLASH, MAXIMUM 2, AND MAXIMUM 3 PROGRAMMING BY TIME-OF-DAY DURING CLOSURE.

2) CONTROLLER SHALL BE INITIALLY PROGRAMMED AND FINE-TUNED BASED ON PREVAILING FIELD CONDITIONS FOR MAXIMUM 1, OR FLASH (IF RETAINED AS EXISTING), MAXIMUM 2, AND COORDINATOR PROGRAMMING BY TIME-OF-DAY DURING NON-CLOSURE.

US-5 TEMPORARY TRAFFIC SIGNAL PLAN 3

SCALE 1" = 20'-0"

20 0 20

SIGNAL FACE ARRANGEMENT W/PHASE NUMBERS

(1, 5) (2, 4, 6, 8)

LIST OF MAJOR EQUIPMENT

	QUANTITY
SPECIAL PROVISION, (GPS TIME CLOCK)	1

PROJECT NAME: HARTFORD
PROJECT NUMBER: IM 091-2(79)

FILE NAME: s12a132bdr_rte5_sig.dgn
PROJECT LEADER: K. HIGGINS
DESIGNED BY: J. SALVATORI
US5 TEMPORARY TRAFFIC SIGNAL PLAN 3

PLOT DATE: 15-DEC-2014
DRAWN BY: K. FRIEDLAND
CHECKED BY: I. DEGUTIS
SHEET 49 OF 166

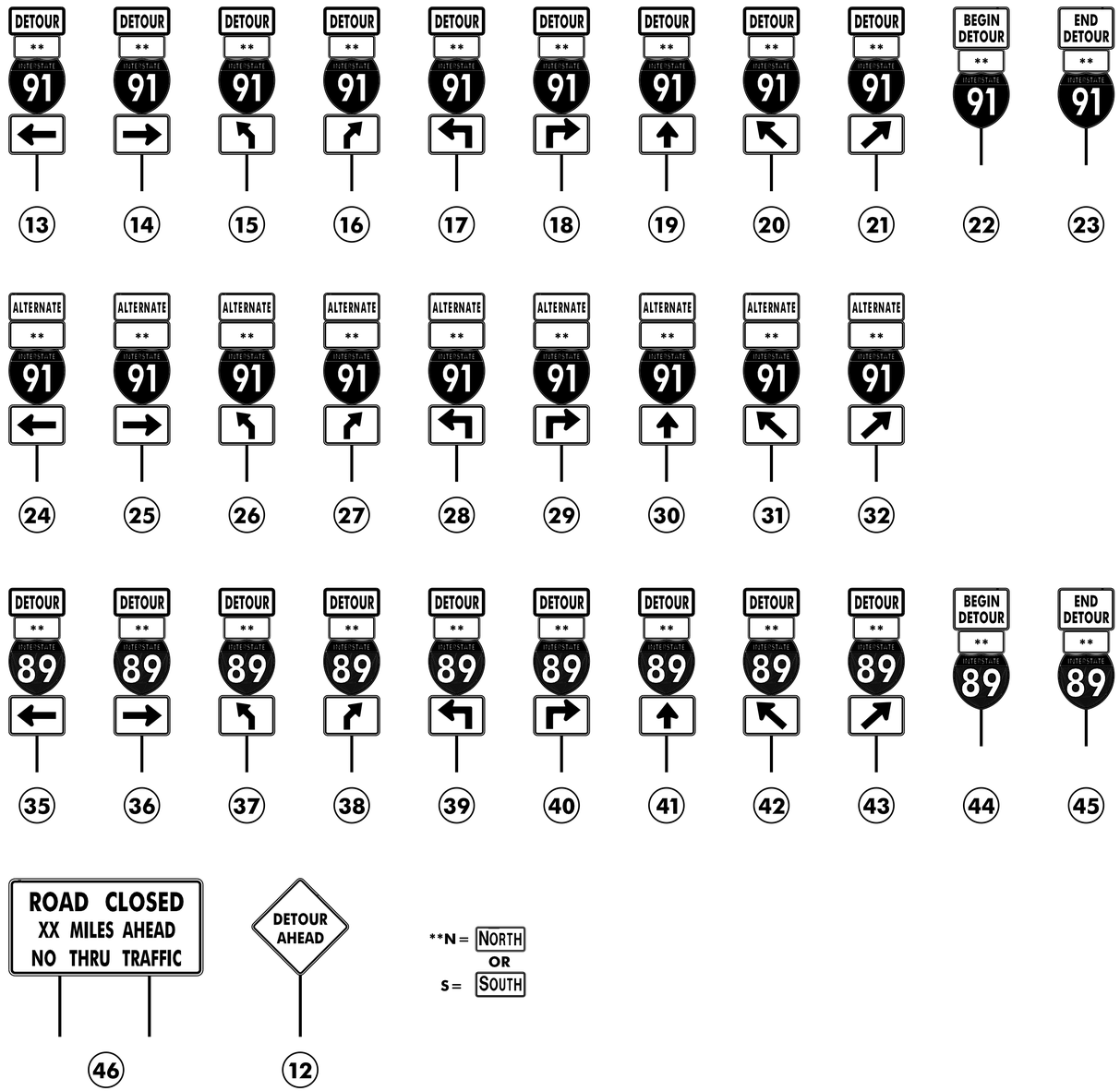

NOTES:

1. THE PORTABLE CHANGEABLE MESSAGE SIGNS SHALL BE FULLY OPERATIONAL A MINIMUM OF TWO WEEKS PRIOR TO THE CLOSURE OF I-91 OR US-5 AS APPLICABLE.

2. DURING ACTUAL CLOSURE, ELIMINATE PHASE 3 AND REMOVE "WILL BE" FROM PHASE 1.

3. DETOUR SIGNS SHALL BE LOCATED ADJACENT TO EXISTING INTERSECTION ROUTE MARKER ASSEMBLIES WHERE APPLICABLE.

4. CONFIRMATION ROUTE MARKERS SHALL BE INSTALLED IMMEDIATELY FOLLOWING EACH TURN AND AT ALL LOCATIONS ALONG DETOUR WHERE ROUTE MARKERS EXIST FOR THE PARENT ROUTE.

5. DETOUR SIGNING IS THE RESPONSIBILITY OF THE CONTRACTOR. PAYMENT FOR ALL TEMPORARY TRAFFIC CONTROL DEVICES FOR IMPLEMENTING THE DETOUR, INCLUDING BUT NOT LIMITED TO SIGNS, BARRICADES AND MESSAGE BOARDS, WILL BE INCLUDED IN THE UNIT PRICE BID FOR CONTRACT ITEM 900.645 SPECIAL PROVISION TRAFFIC CONTROL, ALL -INCLUSIVE).

6. THIS DETOUR PLAN IS A CONCEPTUAL OUTLINE ONLY AND THE CONTRACTOR SHALL SUBMIT A DETAILED PLAN OF EACH INTERSECTION SHOWING DETOUR SIGN LOCATIONS IN RELATION TO EXISTING SIGNS.

S

I	-	9	1				
W	I	L	L		B	E	
C	L	O	S	E	D		

PORTABLE CHANGEABLE SIGN – PHASE 1

S

B	E	T	W	E	E	N	
E	X	I	T		1	1	-
E	X	I	T		1	0	

PORTABLE CHANGEABLE SIGN – PHASE 2 SB

S

B	E	T	W	E	E	N	
E	X	I	T		1	1	-
E	X	I	T		1	2	

PORTABLE CHANGEABLE SIGN – PHASE 2 NB

* M=MONTH
D=DAY

S

*	M	M	M	M		D	D	-
*	M	M	M	M		D	D	

PORTABLE CHANGEABLE SIGN – PHASE 3

DETOUR SIGN LEGEND

NOT TO SCALE

PROJECT NAME: HARTFORD
PROJECT NUMBER: IM 091-2(79)

FILE NAME: s12a132detour.dgn
PROJECT LEADER: K. HIGGINS
DESIGNED BY: W. LAMMER
DETOUR SIGN LEGEND

PLOT DATE: 15-DEC-2014
DRAWN BY: K. FRIEDLAND
CHECKED BY: W. LAMMER
SHEET 50 OF 166

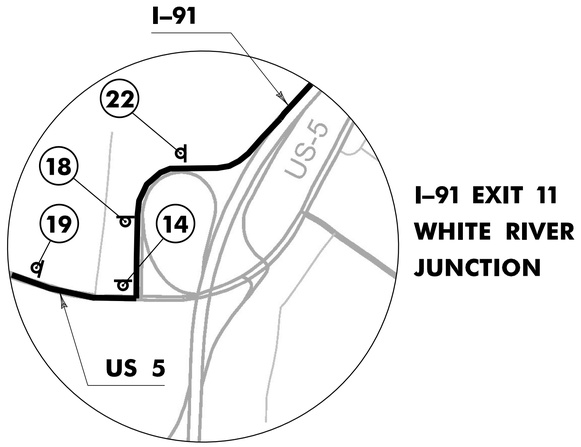

INSET "A"
I-91 EXIT 11
WHITE RIVER JUNCTION
NOT TO SCALE

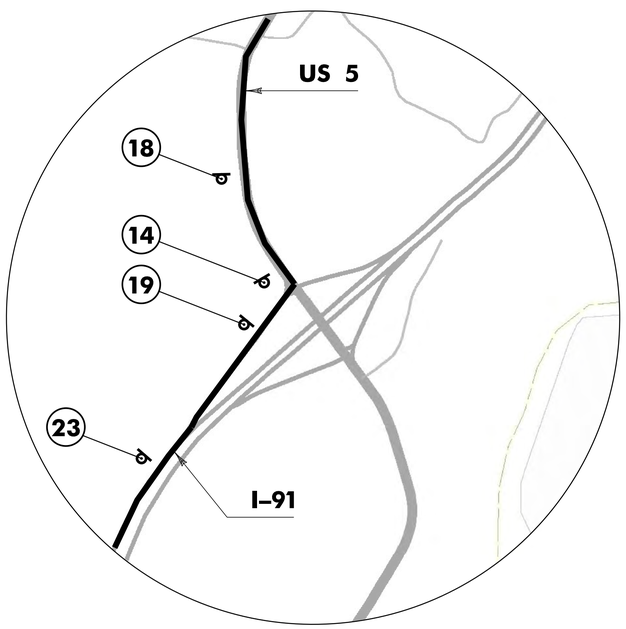

INSET "B"
I-91 EXIT 9
HARTLAND
NOT TO SCALE

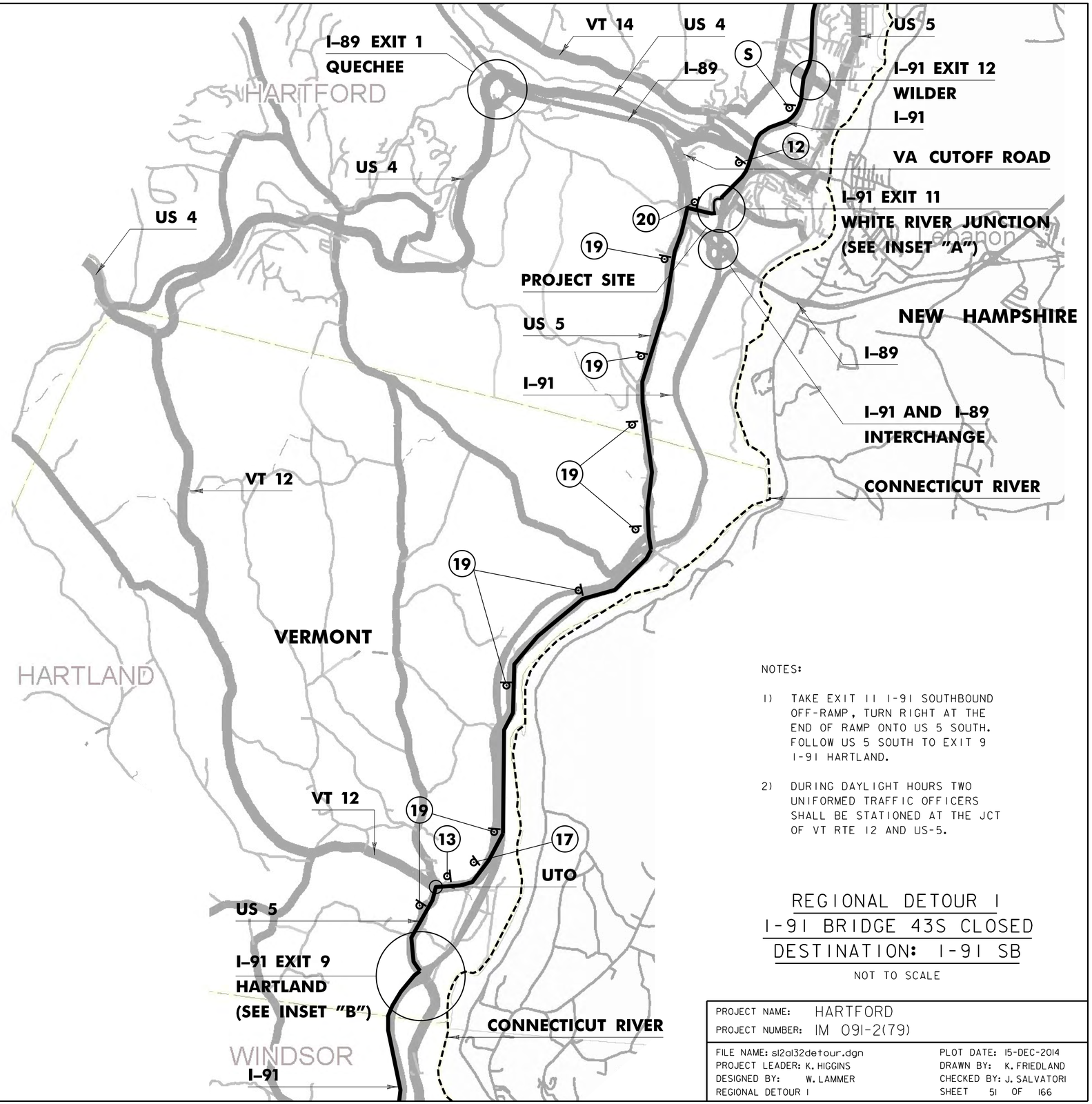

NOTES:

1) TAKE EXIT 11 I-91 SOUTHBOUND OFF-RAMP, TURN RIGHT AT THE END OF RAMP ONTO US 5 SOUTH. FOLLOW US 5 SOUTH TO EXIT 9 I-91 HARTLAND.

2) DURING DAYLIGHT HOURS TWO UNIFORMED TRAFFIC OFFICERS SHALL BE STATIONED AT THE JCT OF VT RTE 12 AND US-5.

REGIONAL DETOUR 1
I-91 BRIDGE 43S CLOSED
DESTINATION: I-91 SB
NOT TO SCALE

PROJECT NAME: HARTFORD	
PROJECT NUMBER: IM 091-2(79)	
FILE NAME: s12a132detour.dgn	PLOT DATE: 15-DEC-2014
PROJECT LEADER: K. HIGGINS	DRAWN BY: K. FRIEDLAND
DESIGNED BY: W. LAMMER	CHECKED BY: J. SALVATORI
REGIONAL DETOUR 1	SHEET 51 OF 166

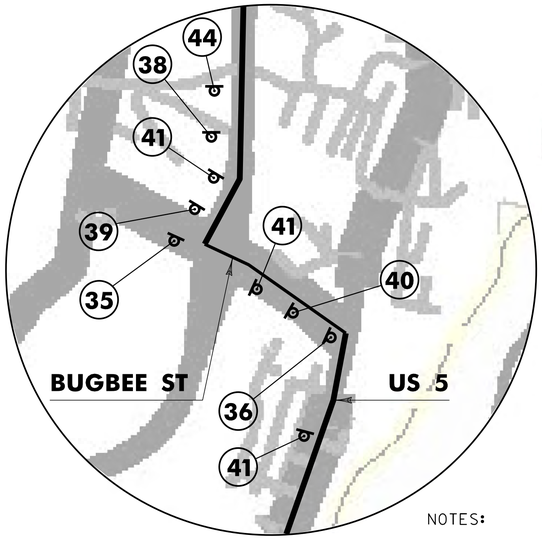

INSET "A"
I-91 EXIT 12
WILDER
NOT TO SCALE

NOTES:

1) TAKE EXIT 12 I-91 SOUTHBOUND OFF-RAMP. TURN LEFT AT THE END OF RAMP, FOLLOW 0.4 MILES TO US 5 SOUTH. FOLLOW US 5 SOUTH TO US 4 WEST. FOLLOW US 4 TO I-89 EXIT 1, NORTHBOUND OR SOUTHBOUND.

2) DURING DAYLIGHT HOURS ONE UNIFORMED TRAFFIC OFFICER SHALL BE STATIONED AT THE JCT OF US RT4 AND I-89 EXIT 1 SOUTH RAMPS AS SHOWN IN INSET "B".

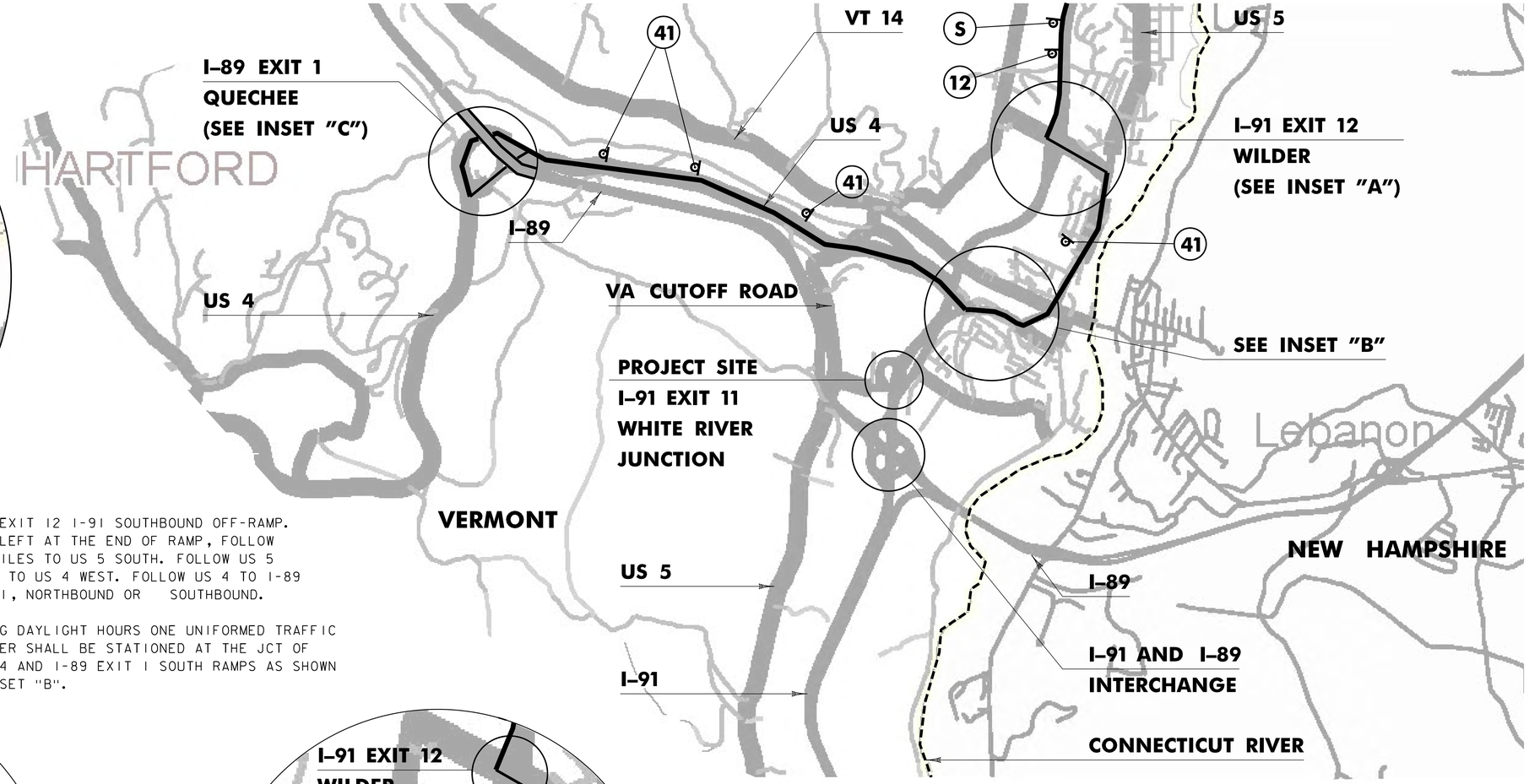

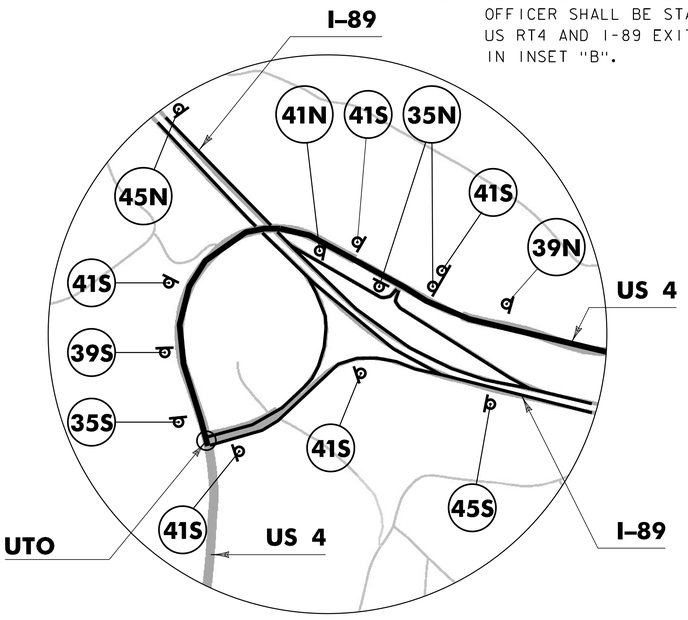

INSET "C"
I-89 EXIT 1
QUECHEE
NOT TO SCALE

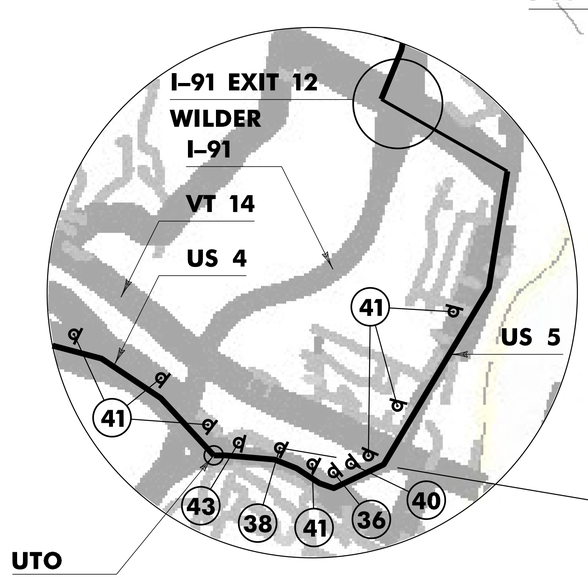

INSET "B"
NOT TO SCALE

REGIONAL DETOUR 2
I-91 BRIDGE 43S CLOSED
DESTINATION: I-89
NOT TO SCALE

PROJECT NAME: HARTFORD	
PROJECT NUMBER: IM 091-2(79)	
FILE NAME: s12a132detour.dgn	PLOT DATE: 15-DEC-2014
PROJECT LEADER: K. HIGGINS	DRAWN BY: K. FRIEDLAND
DESIGNED BY: W. LAMMER	CHECKED BY: J. SALVATORI
REGIONAL DETOUR 2	SHEET 52 OF 166

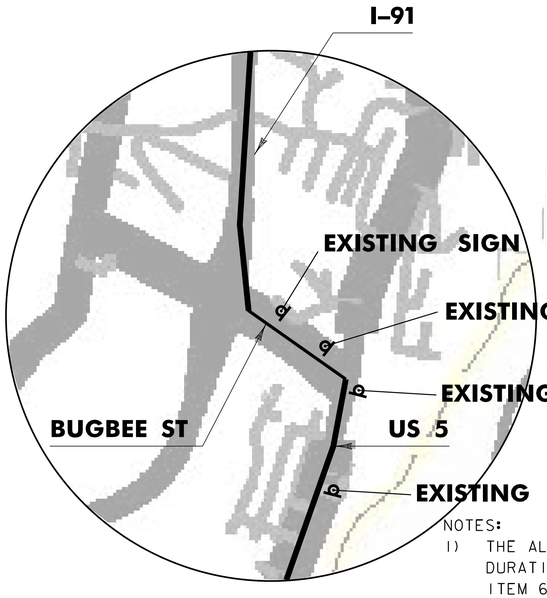

INSET "A"
I-91 EXIT 12
WILDER
NOT TO SCALE

NOTES:

1) THE ALTERNATE ROUTE SHALL BE SIGNED FOR THE DURATION OF THE PROJECT AND PAID FOR UNDER ITEM 641.10, "TRAFFIC CONTROL, (I-91 NORTHBOUND).

2) ALTERNATE ROUTE SHALL BE ACTIVATED AS PART OF THE SMART WORK ZONE WHEN EXTENDED QUEUES ARE EXPERIENCED AT THE INTERCHANGE.

3) I-89 NORTHBOUND OR SOUTHBOUND TRAFFIC WISHING TO TRAVEL I-91 NORTHBOUND SHALL PROCEED TO EXIT 1 I-89 NORTHBOUND OFF-RAMP. TURN RIGHT AT THE END OF RAMP, FOLLOW US 4 EAST TO US 5 NORTH. CONTINUE FOLLOWING US 5 NORTH TO EXIT 12 I-91 NORTHBOUND.

4) DURING DAYLIGHT HOURS ONE UNIFORMED TRAFFIC OFFICER SHALL BE STATIONED AT THE JCT OF US RT4 AND RT5 AS SHOWN IN INSET "B".

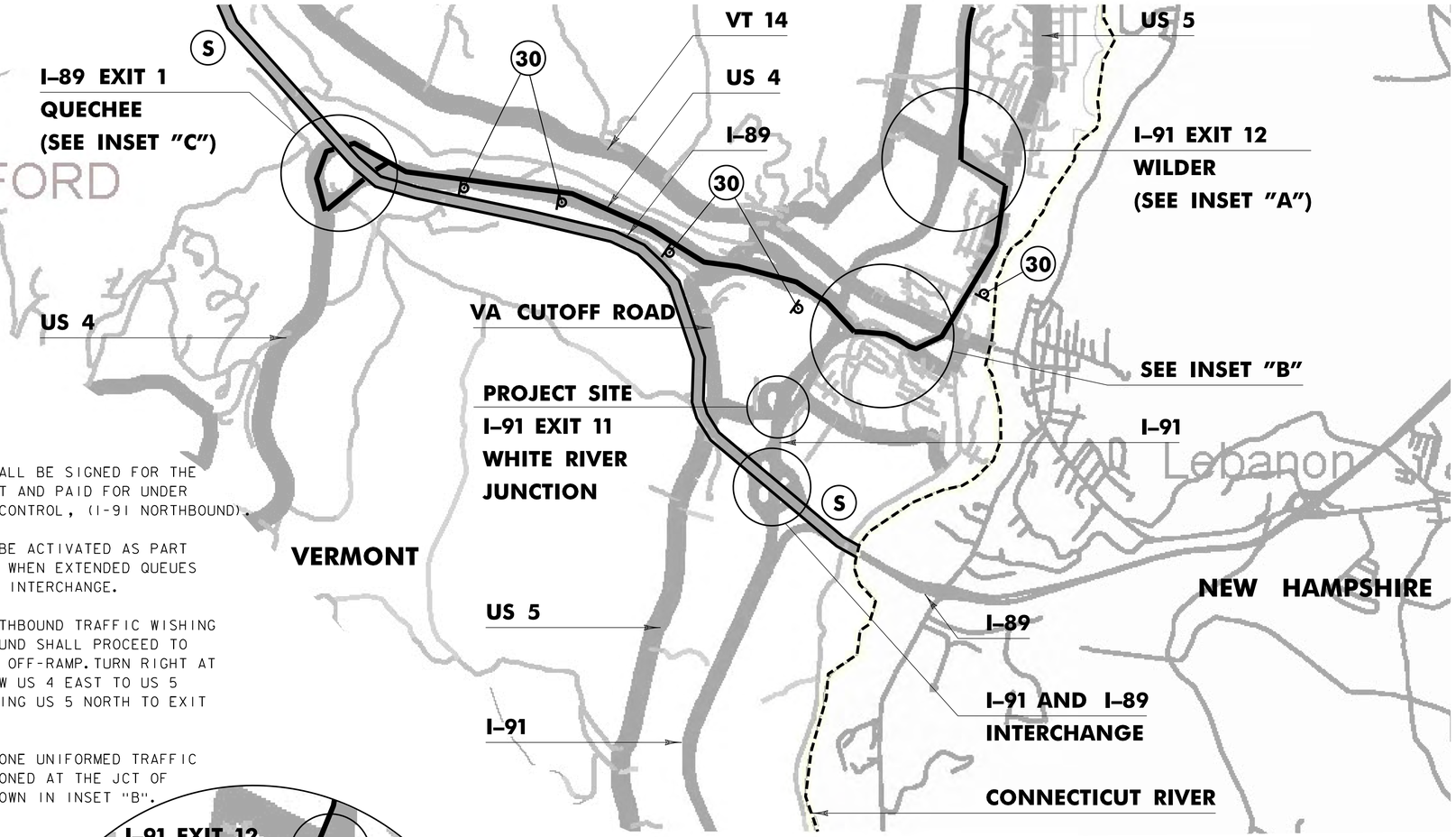

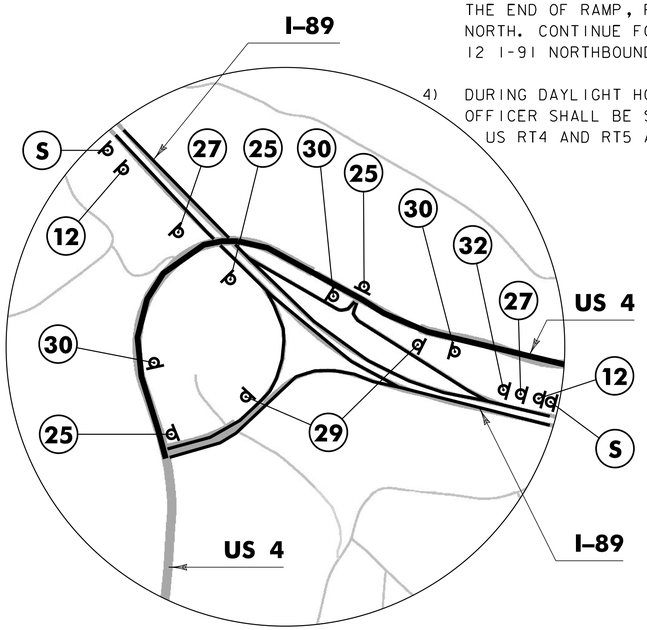

INSET "C"
I-89 EXIT 1
QUECHEE
NOT TO SCALE

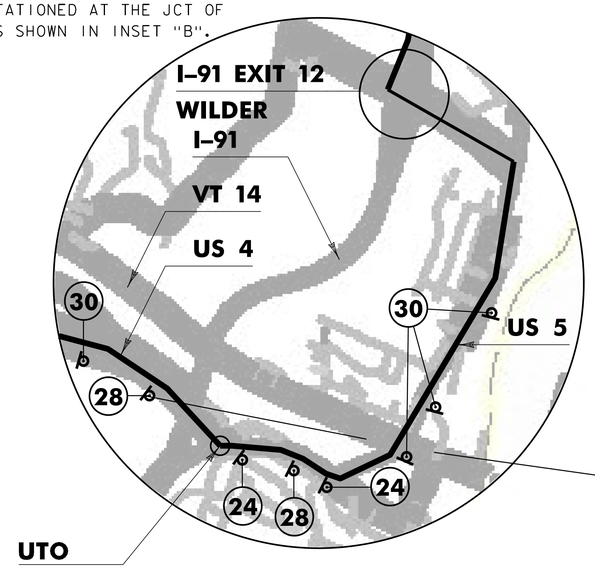

INSET "B"
NOT TO SCALE

COVER SIGN

ALTERNATE ROUTE TO I-91
NOT TO SCALE

PROJECT NAME: HARTFORD	
PROJECT NUMBER: IM 091-2(79)	
FILE NAME: s12a132detour.dgn	PLOT DATE: 15-DEC-2014
PROJECT LEADER: K. HIGGINS	DRAWN BY: J. SALVATORI
DESIGNED BY: J. SALVATORI	CHECKED BY: M. MILLER
ALTERNATE ROUTE TO I-91	SHEET 53 OF 166

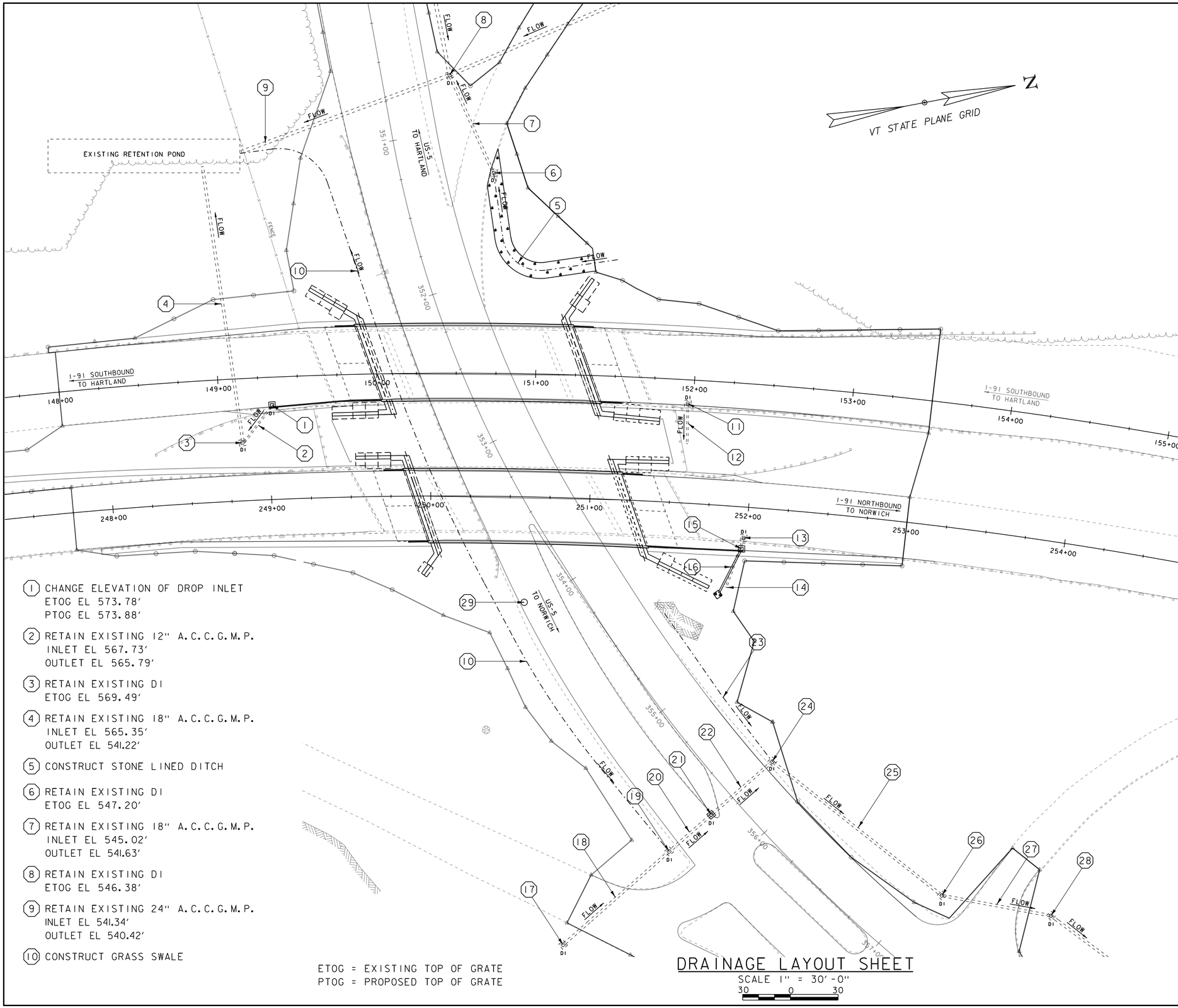

1. CHANGE ELEVATION OF DROP INLET
   ETOG EL 573.78'
   PTOG EL 573.88'
2. RETAIN EXISTING 12" A.C.C.G.M.P.
   INLET EL 567.73'
   OUTLET EL 565.79'
3. RETAIN EXISTING DI
   ETOG EL 569.49'
4. RETAIN EXISTING 18" A.C.C.G.M.P.
   INLET EL 565.35'
   OUTLET EL 541.22'
5. CONSTRUCT STONE LINED DITCH
6. RETAIN EXISTING DI
   ETOG EL 547.20'
7. RETAIN EXISTING 18" A.C.C.G.M.P.
   INLET EL 545.02'
   OUTLET EL 541.63'
8. RETAIN EXISTING DI
   ETOG EL 546.38'
9. RETAIN EXISTING 24" A.C.C.G.M.P.
   INLET EL 541.34'
   OUTLET EL 540.42'
10. CONSTRUCT GRASS SWALE
11. REMOVE EXISTING DI
    ETOG EL 569.68'
12. REMOVE EXISTING BURIED PIPE
    INLET EL UNKNOWN
    OUTLET EL UNKOWN
13. REMOVE EXISTING DI
    ETOG EL 569.68'
14. REMOVE EXISTING 12" C.G.M.P.
    INLET EL 564.70'
    OUTLET EL 562.81'
15. NEW PRECAST REINFORCED CONCRETE DROP INLET
    WITH CAST IRON GRATE
    PTOG EL 569.50'
    SUMP EL 563.50'
16. NEW 18" x 30' OPTION PIPE WITH
    4' WIDE x 4' LONG STONE PAD
    INLET EL 564.50'
    OUTLET EL 562.00'
17. RETAIN EXISTING DI
    ETOG EL 552.50'
18. RETAIN EXISTING 18" RCP
    INLET EL 548.51'
    OUTLET EL 544.72'
19. RETAIN EXISTING DI
    ETOG EL 549.06'
20. RETAIN EXISTING 18" RCP
    INLET EL 548.51'
    OUTLET EL 544.72'
21. NEW CAST IRON COVER WITH FRAME
    ON EXISTING DI
    ETOG EL 549.01'
    PTOG EL 548.75'
22. RETAIN EXISTING 18" RCP
    INLET EL 540.15'
    OUTLET EL 536.65'
23. CONSTRUCT GRASS SWALE
24. RETAIN EXISTING DI
    ETOG EL 544.28'
25. RETAIN EXISTING 18" RCP
    INLET EL 536.37'
    OUTLET EL 535.32'
26. RETAIN EXISTING DI
    ETOG EL 540.72'
27. RETAIN EXISTING 18" RCP
    INLET EL 535.21'
    OUTLET EL 539.93'
28. RETAIN EXISTING DI
    ETOG EL 540.26'
29. CHANGE ELEVATION OF MANHOLE
    ETOG EL 551.84'
    PTOG EL 551.54'

ETOG = EXISTING TOP OF GRATE
PTOG = PROPOSED TOP OF GRATE

DRAINAGE LAYOUT SHEET

SCALE 1" = 30'-0"
30 0 30

PROJECT NAME: HARTFORD	
PROJECT NUMBER: IM 091-2(79)	
FILE NAME: s12a132drain.dgn	PLOT DATE: 15-DEC-2014
PROJECT LEADER: K. HIGGINS	DRAWN BY: J. GRIGAS
DESIGNED BY: J. GRIGAS	CHECKED BY: W. LAMMER
DRAINAGE LAYOUT SHEET	SHEET 54 OF 166

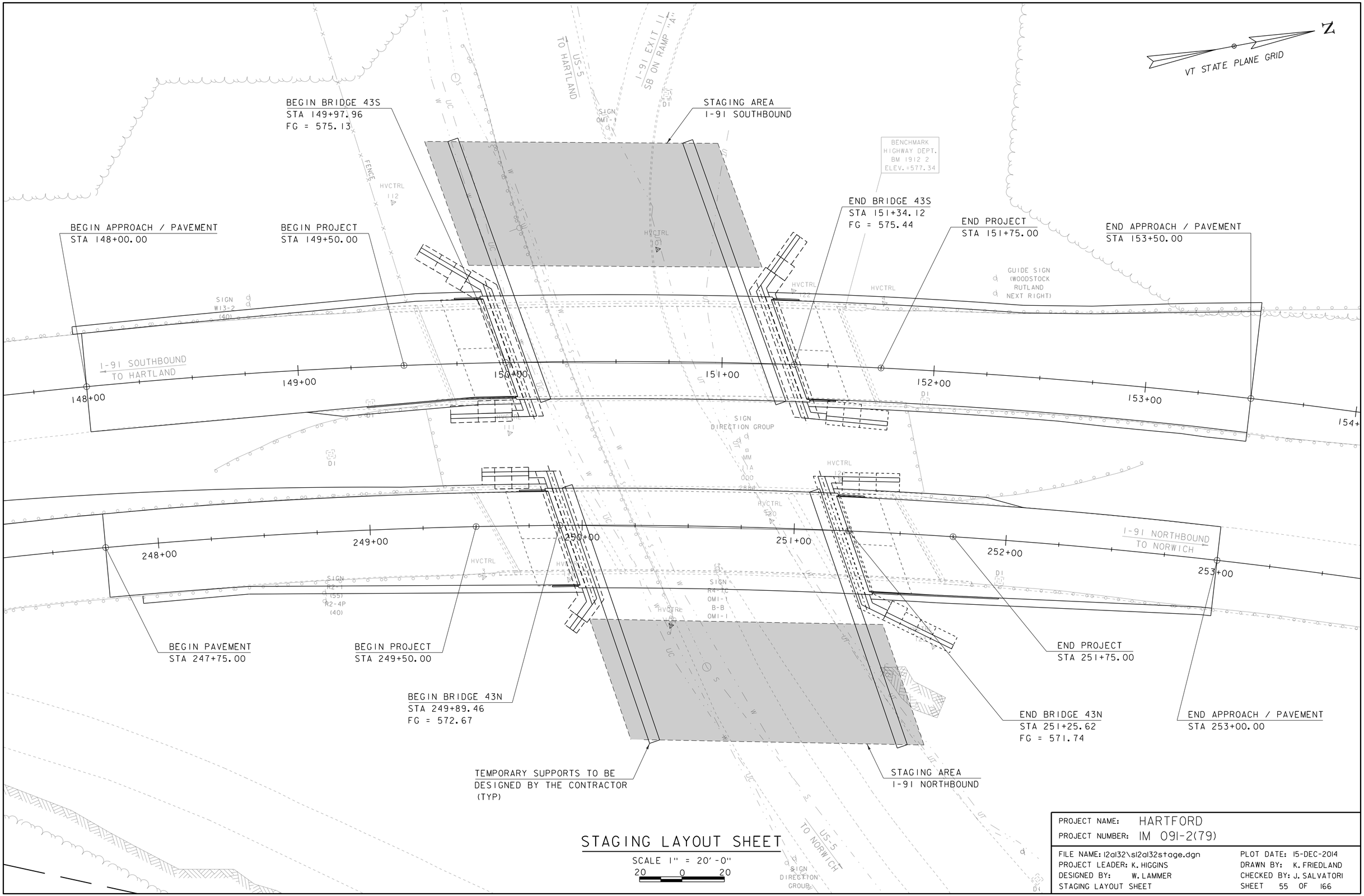

STAGING LAYOUT SHEET

SCALE 1" = 20'-0"
20 0 20

PROJECT NAME: HARTFORD	
PROJECT NUMBER: IM 091-2(79)	
FILE NAME: 12al32\s12al32stage.dgn	PLOT DATE: 15-DEC-2014
PROJECT LEADER: K. HIGGINS	DRAWN BY: K. FRIEDLAND
DESIGNED BY: W. LAMMER	CHECKED BY: J. SALVATORI
STAGING LAYOUT SHEET	SHEET 55 OF 166

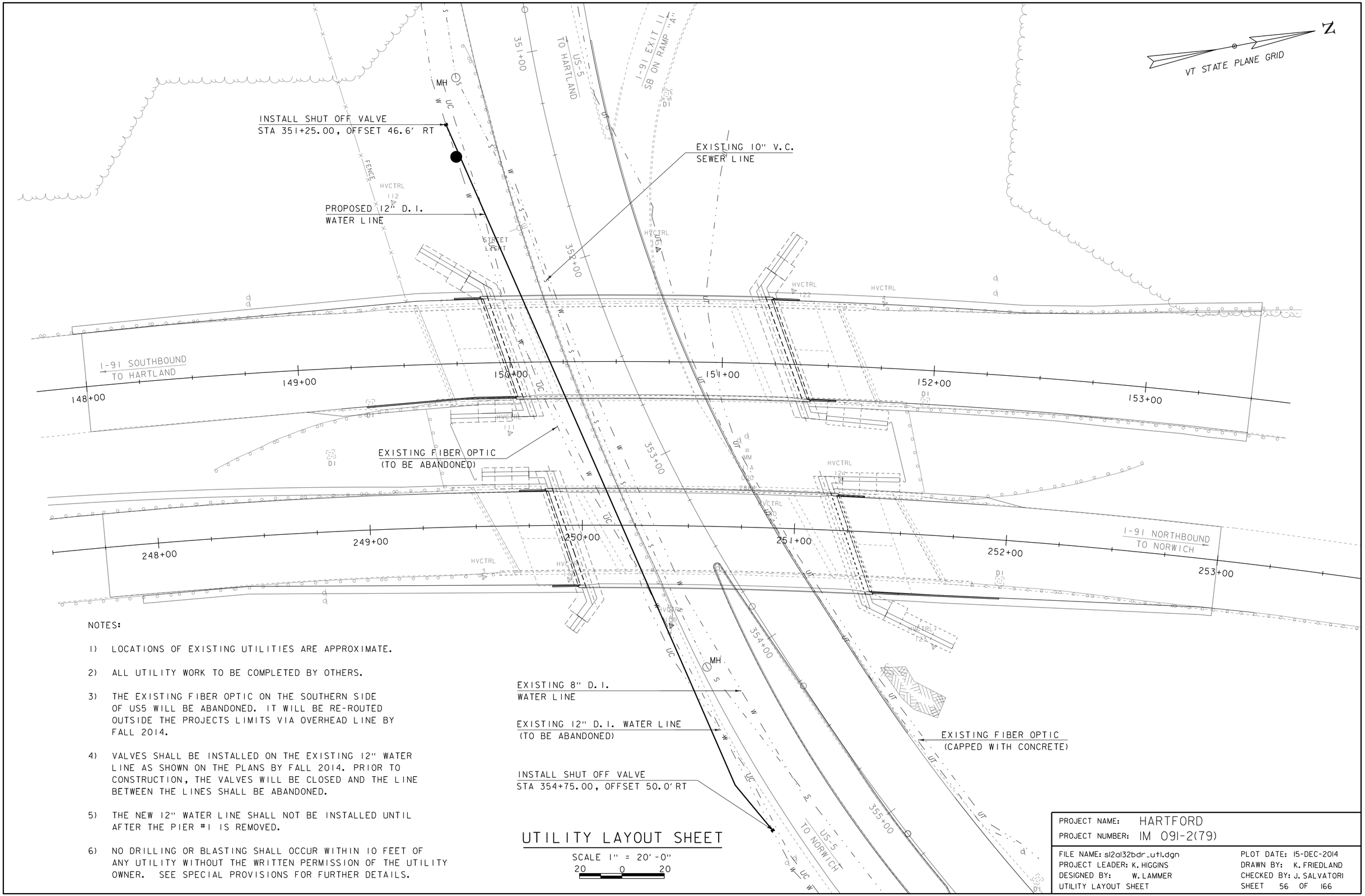

NOTES:

1) LOCATIONS OF EXISTING UTILITIES ARE APPROXIMATE.

2) ALL UTILITY WORK TO BE COMPLETED BY OTHERS.

3) THE EXISTING FIBER OPTIC ON THE SOUTHERN SIDE OF US5 WILL BE ABANDONED. IT WILL BE RE-ROUTED OUTSIDE THE PROJECTS LIMITS VIA OVERHEAD LINE BY FALL 2014.

4) VALVES SHALL BE INSTALLED ON THE EXISTING 12" WATER LINE AS SHOWN ON THE PLANS BY FALL 2014. PRIOR TO CONSTRUCTION, THE VALVES WILL BE CLOSED AND THE LINE BETWEEN THE LINES SHALL BE ABANDONED.

5) THE NEW 12" WATER LINE SHALL NOT BE INSTALLED UNTIL AFTER THE PIER #1 IS REMOVED.

6) NO DRILLING OR BLASTING SHALL OCCUR WITHIN 10 FEET OF ANY UTILITY WITHOUT THE WRITTEN PERMISSION OF THE UTILITY OWNER. SEE SPECIAL PROVISIONS FOR FURTHER DETAILS.

UTILITY LAYOUT SHEET

SCALE 1" = 20'-0"
20 0 20

PROJECT NAME: HARTFORD	
PROJECT NUMBER: IM 091-2(79)	
FILE NAME: s12a132bdr_utl.dgn	PLOT DATE: 15-DEC-2014
PROJECT LEADER: K. HIGGINS	DRAWN BY: K. FRIEDLAND
DESIGNED BY: W. LAMMER	CHECKED BY: J. SALVATORI
UTILITY LAYOUT SHEET	SHEET 56 OF 166

DURABLE 12" WHITE LINE, RECESSED POLYUREA (DOTTED)
STA 148+00.00 - 153+00.00 LT

DURABLE 12" WHITE LINE, RECESSED POLYUREA (SOLID)
STA 153+00.00 - 153+50.00 LT

REMOVAL OF EXISTING DELINEATOR
STA 148+86.25 RT
STA 151+50.25 RT
STA 248+96.50 LT
STA 251+79.00 LT

DELINEATOR, TYPE I (YELLOW)
STA 148+86.25 RT
STA 151+50.25 RT
STA 248+96.50 LT
STA 251+79.00 LT

DURABLE 6" WHITE LINE, RECESSED POLYUREA (SOLID)
STA 148+00.00 - 153+50.00 LT
STA 247+75.00 - 253+00.00 LT

DURABLE 6" YELLOW LINE, RECESSED POLYUREA (SOLID)
STA 148+00.00 - 153+50.00 RT
STA 247+75.00 - 253+00.00 RT

DURABLE 6" WHITE LINE, RECESSED POLYUREA (DASHED)
STA 148+00.00 - 153+50.00 ℄
STA 247+75.00 - 253+00.00 ℄

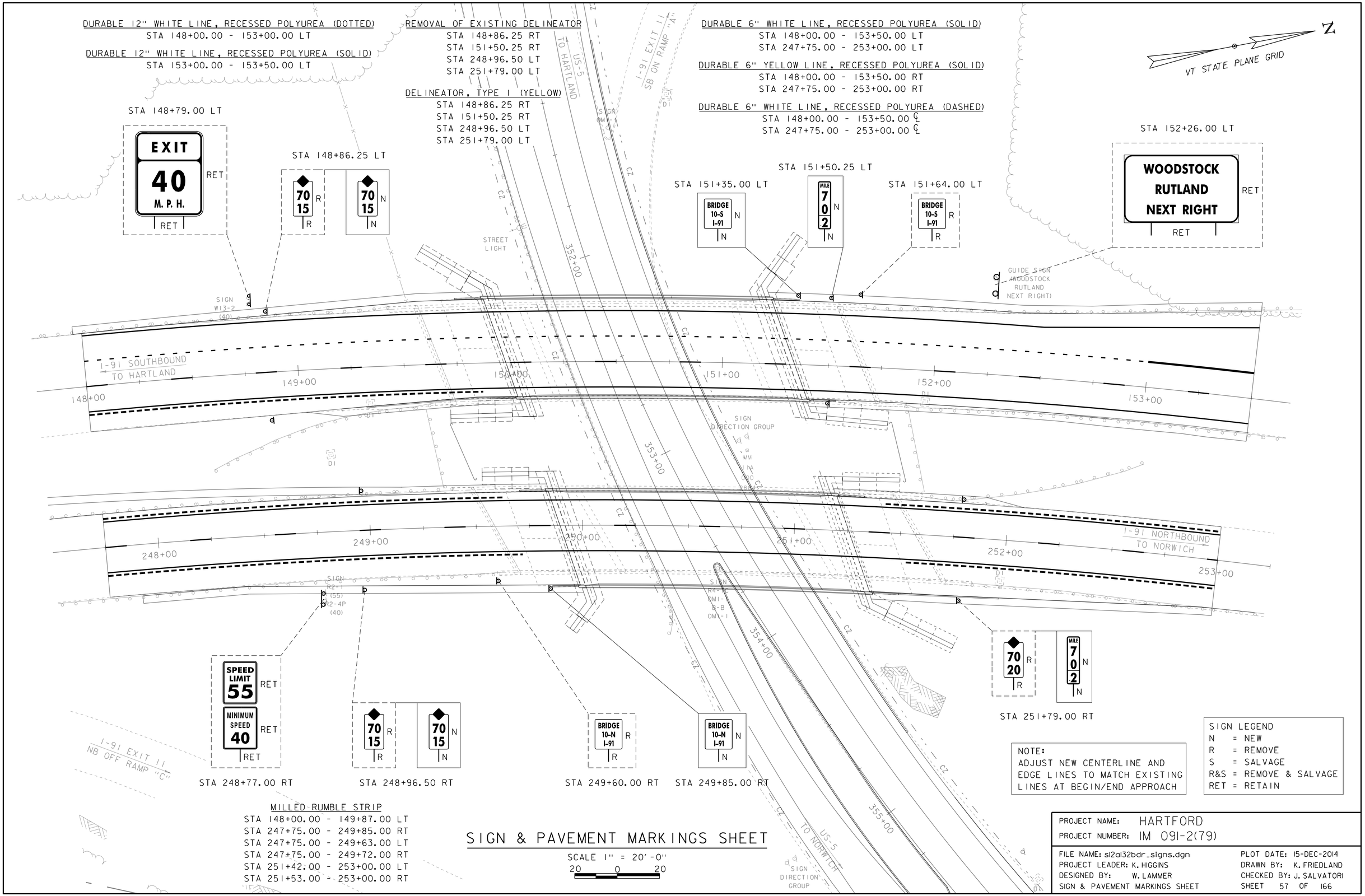

MILLED RUMBLE STRIP
STA 148+00.00 - 149+87.00 LT
STA 247+75.00 - 249+85.00 RT
STA 247+75.00 - 249+63.00 LT
STA 247+75.00 - 249+72.00 RT
STA 251+42.00 - 253+00.00 LT
STA 251+53.00 - 253+00.00 RT

SIGN & PAVEMENT MARKINGS SHEET

SCALE 1" = 20'-0"
20 0 20

NOTE:
ADJUST NEW CENTERLINE AND EDGE LINES TO MATCH EXISTING LINES AT BEGIN/END APPROACH

SIGN LEGEND
N = NEW
R = REMOVE
S = SALVAGE
R&S = REMOVE & SALVAGE
RET = RETAIN

PROJECT NAME: HARTFORD
PROJECT NUMBER: IM 091-2(79)

FILE NAME: s12a132bdr_signs.dgn
PROJECT LEADER: K. HIGGINS
DESIGNED BY: W. LAMMER
SIGN & PAVEMENT MARKINGS SHEET

PLOT DATE: 15-DEC-2014
DRAWN BY: K. FRIEDLAND
CHECKED BY: J. SALVATORI
SHEET 57 OF 166

STATE OF VERMONT
AGENCY OF TRANSPORTATION

TRAFFIC SIGN SUMMARY SHEET

MILEMARKER, STATION, OR SIGN NUMBER	SIGN LEGEND	SIGN DIMENSIONS EA	SIGN DIMENSIONS WIDTH (in)	SIGN DIMENSIONS HEIGHT (in)	NEW & SALVAGED SIGNS "A"	NEW & SALVAGED SIGNS "B"	NEW & SALVAGED SIGNS SALV SIGN	NEW & SALVAGED SIGNS SALV TIS	EXIST POST RETAIN	EXIST POST SALVAGE	NEW SIGN POSTS NO. OF POSTS	FLANGED CHANNEL lb/ft 1.12	FLANGED CHANNEL lb/ft 2.0	FLANGED CHANNEL lb/ft 3.0	SQUARE STEEL (in) lb/ft 1.75 (1.88)	SQUARE STEEL (in) lb/ft 2.0 (2.42)	SQUARE STEEL (in) lb/ft 2.5 (3.35)	ANCHOR	SLEEVE	TUBULAR ALUMINUM Ø (in) lb/ft 3.0 (1.3)	TUBULAR ALUMINUM Ø (in) lb/ft 4.0 (1.7)	TUBULAR ALUMINUM Ø (in) lb/ft 4.0 MOD (1.7)	TUBULAR STEEL Ø (in) FOUND-ATION	TUBULAR STEEL Ø (in) lb/ft 3.0 (7.6)	TUBULAR STEEL Ø (in) lb/ft 3.5 (9.0)	TUBULAR STEEL Ø (in) lb/ft 4.0 (10.8)	TUBULAR STEEL Ø (in) lb/ft 5.0 (14.6)	W-SHAPE STEEL FTG. SIZE 24"	W-SHAPE STEEL FTG. SIZE 30"	W-SHAPE STEEL WEIGHT	W-SHAPE STEEL POST SIZE	SIGN FRAME REQUIRED	REMARKS	SIGN DETAIL DETAIL IN SHSM	SIGN DETAIL DETAIL ON SHEET NUMBER	SIGN DETAIL STD. SHEET NUMBER
												OPTION ITEMS																								
148+86.25 LT	70 15	1	6	8	0.33						1				8			X																T-40			
151+50.25 LT	MILE 7 0 2	1	12	48	4						1				8			X															D10-2a	X		
151+35.00 LT	BRIDGE 10-S I-91	1	6	8	0.33						1				8			X																T-42			
248+96.50 RT	70 15	1	6	8	0.33						1				8			X																T-40			
249+85.00 RT	BRIDGE 10-N I-91	1	6	8	0.33						1				8			X																T-42			
251+79.00 RT	MILE 7 0 2	1	12	48	4						1				8			X															D10-2a	X		
FINAL POST LENGTHS ARE TO BE DETERMINED IN THE FIELD. POST SIZES ARE COMPUTED BASED ON INFORMATION FURNISHED ON THE STANDARD SHEETS AND VTRANS "SIGN POST DESIGN GUIDELINE." SHS = STANDARD HIGHWAY SIGNS												FT	FT	FT	FT 48	FT	FT		EA	LB	LB	LB		LB	LB	LB	LB								
	TOTALS		SF 9.32	SF	EA.	SF						FT			FT 48					LB			EA.	LB				EA.	EA.	LB					

PROJECT NAME: HARTFORD
PROJECT NUMBER: IM 091-2(79)

FILE NAME: s12a132tss.dgn
PROJECT LEADER: K. HIGGINS
DESIGNED BY: W. LAMMER
TRAFFIC SIGN SUMMARY SHEET

PLOT DATE: 15-DEC-2014
DRAWN BY: K. FRIEDLAND
CHECKED BY: J. SALVATORI
SHEET 58 OF 166

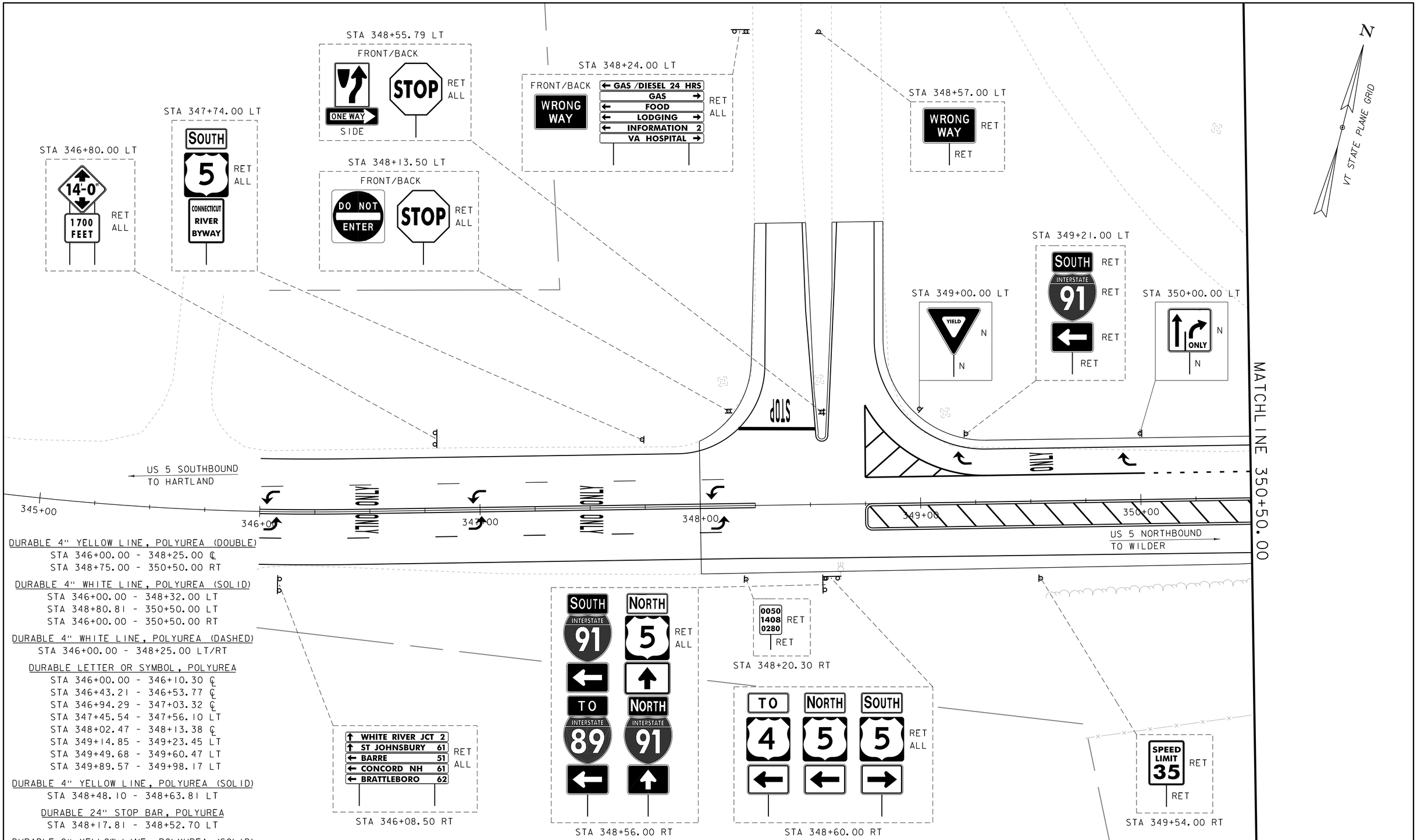

DURABLE 4" YELLOW LINE, POLYUREA (DOUBLE)
STA 346+00.00 - 348+25.00 ℄
STA 348+75.00 - 350+50.00 RT

DURABLE 4" WHITE LINE, POLYUREA (SOLID)
STA 346+00.00 - 348+32.00 LT
STA 348+80.81 - 350+50.00 LT
STA 346+00.00 - 350+50.00 RT

DURABLE 4" WHITE LINE, POLYUREA (DASHED)
STA 346+00.00 - 348+25.00 LT/RT

DURABLE LETTER OR SYMBOL, POLYUREA
STA 346+00.00 - 346+10.30 ℄
STA 346+43.21 - 346+53.77 ℄
STA 346+94.29 - 347+03.32 ℄
STA 347+45.54 - 347+56.10 LT
STA 348+02.47 - 348+13.38 ℄
STA 349+14.85 - 349+23.45 LT
STA 349+49.68 - 349+60.47 LT
STA 349+89.57 - 349+98.17 LT

DURABLE 4" YELLOW LINE, POLYUREA (SOLID)
STA 348+48.10 - 348+63.81 LT

DURABLE 24" STOP BAR, POLYUREA
STA 348+17.81 - 348+52.70 LT

DURABLE 8" YELLOW LINE, POLYUREA (SOLID)
STA 348+75.00 - 350+50.00 RT

DURABLE 8" WHITE LINE, POLYUREA (SOLID)
STA 348+75.00 - 350+00.00 LT

DURABLE 8" WHITE LINE, POLYUREA (DOTTED)
STA 350+00.00 - 350+50.00 LT

NOTE:
ADJUST NEW CENTERLINE AND EDGE LINES TO MATCH EXISTING LINES AT BEGIN/END APPROACH

US 5 SIGNS & PAVEMENT MARKINGS SHEET 1

SCALE 1" = 20'-0"
20 0 20

SIGN LEGEND
N = NEW
R = REMOVE
S = SALVAGE
R&S = REMOVE & SALVAGE
RET = RETAIN

PROJECT NAME: HARTFORD
PROJECT NUMBER: IM 091-2(79)

FILE NAME: s12a132bdr_rte5_signs.dgn
PROJECT LEADER: K. HIGGINS
DESIGNED BY: W. LAMMER
US 5 SIGNS & PAVEMENT MARKINGS SHEET 1
PLOT DATE: 15-DEC-2014
DRAWN BY: K. FRIEDLAND
CHECKED BY: J. SALVATORI
SHEET 59 OF 166

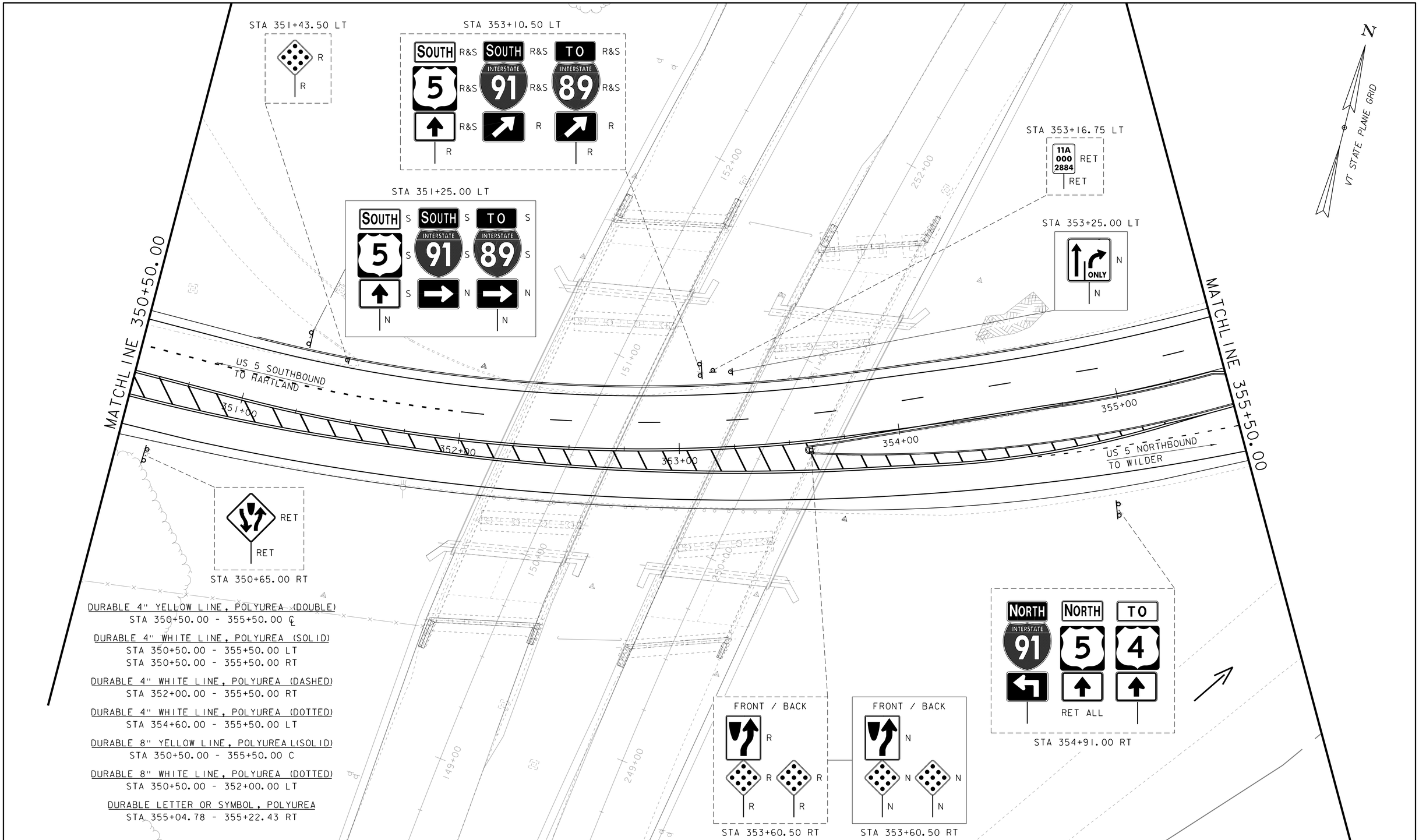

SIGN LEGEND
N = NEW
R = REMOVE
S = SALVAGE
R&S = REMOVE & SALVAGE
RET = RETAIN

US 5 SIGNS & PAVEMENT MARKINGS SHEET 2

SCALE 1" = 20'-0"
20 0 20

PROJECT NAME: HARTFORD
PROJECT NUMBER: IM 091-2(79)

FILE NAME: s12a132bdr_rte5_signs.dgn
PROJECT LEADER: K. HIGGINS
DESIGNED BY: W. LAMMER
US 5 SIGNS & PAVEMENT MARKINGS SHEET 2

PLOT DATE: 15-DEC-2014
DRAWN BY: K. FRIEDLAND
CHECKED BY: J. SALVATORI
SHEET 60 OF 166

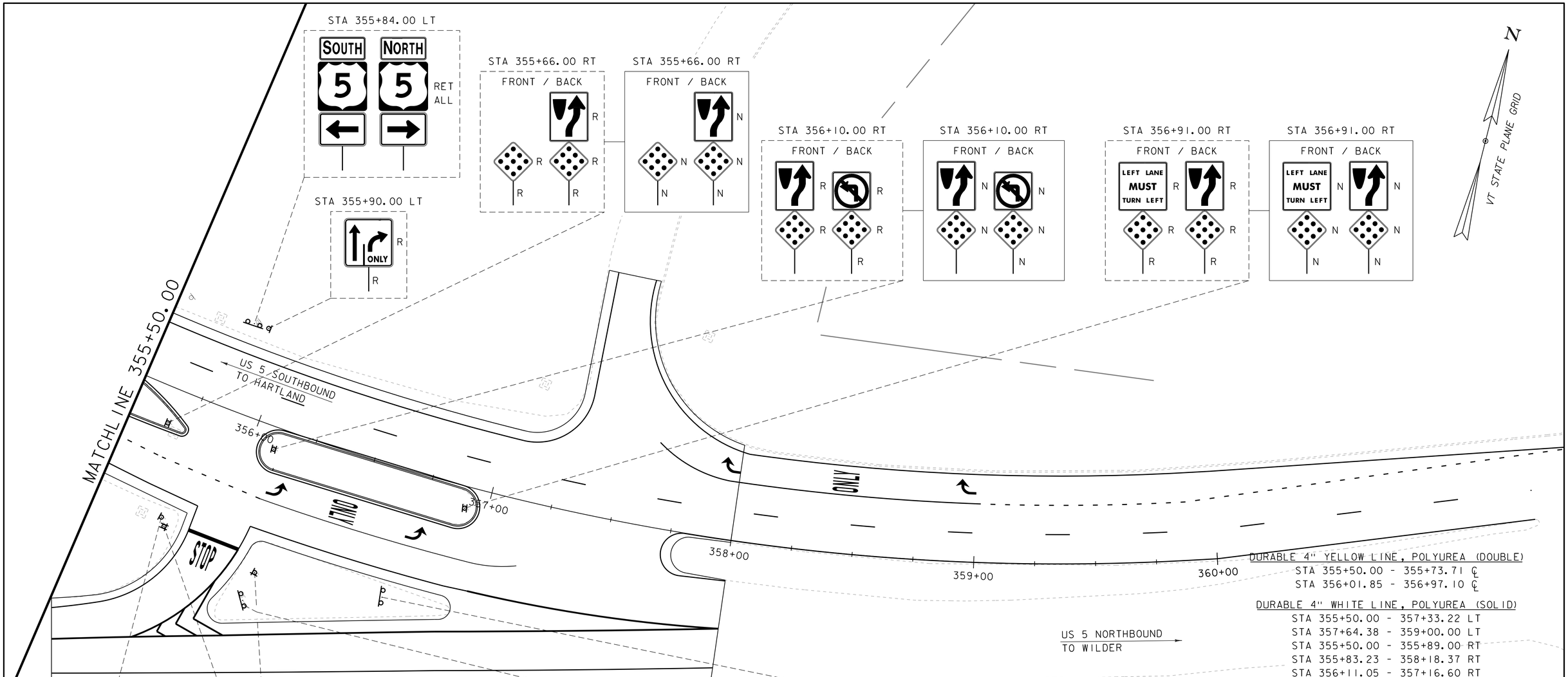

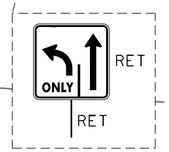

STA 355+77.00 RT

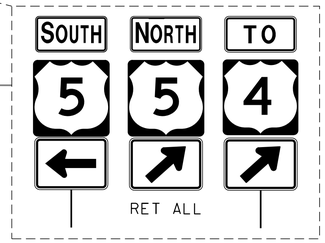

STA 356+18.00 RT

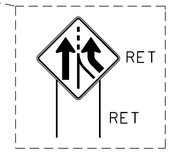

STA 356+69.00 RT

SIGN LEGEND
N = NEW
R = REMOVE
S = SALVAGE
R&S = REMOVE & SALVAGE
RET = RETAIN

NOTE:
ADJUST NEW CENTERLINE AND EDGE LINES TO MATCH EXISTING LINES AT BEGIN/END APPROACH

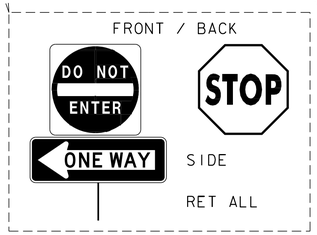

STA 355+80.00 RT
STA 356+19.00 RT

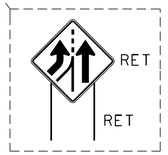

STA 356+78.00 RT

US 5 SIGNS & PAVEMENT MARKINGS SHEET 3

SCALE 1" = 20'-0"
20 0 20

DURABLE 24" STOP BAR, POLYUREA
STA 355+89.00 - 356+09.65 LT

DURABLE 8" YELLOW LINE, POLYUREA (SOLID)
STA 355+50.00 - 355+74.51 ℄
STA 356+02.76 - 356+96.85 ℄

DURABLE 8" WHITE LINE, POLYUREA (SOLID)
STA 355+56.29 - 358+00.00 FRT

DURABLE 4" YELLOW LINE, POLYUREA (DOUBLE)
STA 355+50.00 - 355+73.71 ℄
STA 356+01.85 - 356+97.10 ℄

DURABLE 4" WHITE LINE, POLYUREA (SOLID)
STA 355+50.00 - 357+33.22 LT
STA 357+64.38 - 359+00.00 LT
STA 355+50.00 - 355+89.00 RT
STA 355+83.23 - 358+18.37 RT
STA 356+11.05 - 357+16.60 RT
STA 355+56.30 - 358+18.37 RT
STA 355+56.30 - 357+75.00 RT

DURABLE 4" WHITE LINE, POLYUREA (DASHED)
STA 355+50.00 - 357+48.75 LT

DURABLE 4" WHITE LINE, POLYUREA (DOTTED)
STA 355+50.00 - 356+10.00 RT
STA 359+00.00 - 361+43.32 LT

DURABLE LETTER OR SYMBOL, POLYUREA
STA 356+12.33 - 356+20.47 RT
STA 356+39.10 - 356+49.40 RT
STA 356+70.60 - 356+78.90 RT
STA 357+91.18 - 358+01.00 LT
STA 358+39.20 - 358+50.15 LT
STA 358+91.23 - 359+00.00 LT

DURABLE 4" YELLOW LINE, POLYUREA (SOLID)
STA 357+31.61 - 357+33.22 LT

PROJECT NAME: HARTFORD
PROJECT NUMBER: IM 091-2(79)

FILE NAME: s12a132bdr_rte5_signs.dgn
PROJECT LEADER: K. HIGGINS
DESIGNED BY: W. LAMMER
PLOT DATE: 15-DEC-2014
DRAWN BY: K. FRIEDLAND
CHECKED BY: J. SALVATORI

STATE OF VERMONT
AGENCY OF TRANSPORTATION

TRAFFIC SIGN SUMMARY SHEET

MILEMARKER, STATION, OR SIGN NUMBER	SIGN LEGEND	SIGN DIMENSIONS			NEW & SALVAGED SIGNS				EXIST POST		NEW SIGN POSTS																					SIGN DETAIL		
											NO. OF POSTS	FLANGED CHANNEL			SQUARE STEEL (in)					TUBULAR ALUMINUM Ø (in)			TUBULAR STEEL Ø (in)				W-SHAPE STEEL							
		EA	WIDTH (in)	HEIGHT (in)	"A"	"B"	SALV SIGN	SALV TIS	RETAIN	SALVAGE		lb/ft			1.75	2.0	2.5	ANCHOR	SLEEVE	3.0	4.0	4.0 MOD	FOUND-ATION	3.0	3.5	4.0	5.0	FTG. SIZE 24"	FTG. SIZE 30"	WEIGHT	POST SIZE	STIFFENER	REQUIRED	REMARKS	DETAIL IN SHSM	DETAIL ON SHEET NUMBER	STD. SHEET NUMBER
												lb/ft			lb/ft					lb/ft				lb/ft												
												1.12	2.0	3.0	1.88	2.42	3.35			1.3	1.7	1.7		7.6	9.0	10.8	14.6									
												OPTION ITEMS																								
349+00.00 LT	YIELD	1	36	36	9.00						1					15		X																R1-2	X		
350+00.00 LT	ONLY	1	30	36	7.50						1					15		X																VR-921			E-145A
351+25.00 LT	SOUTH	1					X				2					30		X																M3-3	X		
351+25.00 LT	5	1					X																											M1-4	X		
351+25.00 LT		1					X																											M6-3	X		
351+25.00 LT	SOUTH	1					X																											M3-3	X		
351+25.00 LT	INTERSTATE 91	1					X																											M1-1	X		
351+25.00 LT		1	21	15	2.19																													M6-1	X		
351+25.00 LT	TO	1					X																											M4-5	X		
351+25.00 LT	INTERSTATE 89	1					X																											M1-1	X		
351+25.00 LT		1	21	15	2.19		X																											M6-1	X		
353+25.00 LT	ONLY	1	30	36	7.50						1					15		X																VR-921			E-145A
SUB TOTALS					SF 28.38	SF	EA. 8.00	SF		EA. 5.00		FT	FT	FT	FT	FT 75	FT		EA	LB	LB	LB		LB	LB	LB	LB									
					SF	SF	EA.	SF				FT			FT					LB			EA.	LB				EA.	EA.	LB						

FINAL POST LENGTHS ARE TO BE DETERMINED IN THE FIELD. POST SIZES ARE COMPUTED BASED ON INFORMATION FURNISHED ON THE STANDARD SHEETS AND VTRANS "SIGN POST DESIGN GUIDELINE."
SHS = STANDARD HIGHWAY SIGNS

PROJECT NAME: HARTFORD
PROJECT NUMBER: IM 091-2(79)

FILE NAME: s12a132tss_rte5.dgn
PROJECT LEADER: K. HIGGINS
DESIGNED BY: W. LAMMER
US-5 TRAFFIC SIGN SUMMARY SHEET 1

PLOT DATE: 15-DEC-2014
DRAWN BY: K. FRIEDLAND
CHECKED BY: J. SALVATORI
SHEET 62 OF 166

STATE OF VERMONT
AGENCY OF TRANSPORTATION

TRAFFIC SIGN SUMMARY SHEET

MILEMARKER, STATION, OR SIGN NUMBER	SIGN LEGEND	SIGN DIMENSIONS EA	SIGN DIMENSIONS WIDTH (in)	SIGN DIMENSIONS HEIGHT (in)	NEW & SALVAGED SIGNS "A"	NEW & SALVAGED SIGNS "B"	NEW & SALVAGED SIGNS SALV SIGN	NEW & SALVAGED SIGNS SALV TIS	EXIST POST RETAIN	EXIST POST SALVAGE	NEW SIGN POSTS NO. OF POSTS	FLANGED CHANNEL lb/ft 1.12	FLANGED CHANNEL lb/ft 2.0	FLANGED CHANNEL lb/ft 3.0	SQUARE STEEL (in) lb/ft 1.75	SQUARE STEEL (in) lb/ft 2.0	SQUARE STEEL (in) lb/ft 2.5	ANCHOR	SLEEVE	TUBULAR ALUMINUM Ø (in) lb/ft 3.0	TUBULAR ALUMINUM Ø (in) lb/ft 4.0	TUBULAR ALUMINUM Ø (in) lb/ft 4.0 MOD	FOUND-ATION	TUBULAR STEEL Ø (in) lb/ft 3.0	TUBULAR STEEL Ø (in) lb/ft 3.5	TUBULAR STEEL Ø (in) lb/ft 4.0	TUBULAR STEEL Ø (in) lb/ft 5.0	W-SHAPE STEEL FTG. SIZE 24"	W-SHAPE STEEL FTG. SIZE 30"	W-SHAPE STEEL WEIGHT	W-SHAPE STEEL POST SIZE	STIFFENER REQUIRED	REMARKS	SIGN DETAIL DETAIL IN SHSM	SIGN DETAIL DETAIL ON SHEET NUMBER	SIGN DETAIL STD. SHEET NUMBER
												OPTION ITEMS																								
353+60.50 RT		1	18	24	3.00						1					15		X															ONE POST FOR THREE SIGNS STA 353+60.50 RT (R4-7c)	X		
353+60.50 RT		2	18	18	4.50																												OMI-1	X		
355+66.00 RT		1	18	24	3.00						1					15		X															ONE POST FOR THREE SIGNS STA 355+66.00 RT (R4-7c)	X		
355+66.00 RT		2	18	18	4.50																												OMI-1	X		
356+10.00 RT		1	18	24	3.00						1					15		X															ONE POST FOR FOUR SIGNS STA 356+10.00 RT (R4-7c)	X		
356+10.00 RT		2	18	18	4.50																												OMI-1	X		
356+10.00 RT		1	24	24	4.00																												R3-2	X		
356+91.00 RT		1	30	30	6.25						1					15		X															ONE POST FOR FOUR SIGNS STA 356+91.00 RT (R3-7L)	X		
356+91.00 RT		2	18	18	4.50																												OMI-1	X		
356+91.00 RT		1	18	24	3.00																												R4-7c	X		
FINAL POST LENGTHS ARE TO BE DETERMINED IN THE FIELD. POST SIZES ARE COMPUTED BASED ON INFORMATION FURNISHED ON THE STANDARD SHEETS AND VTRANS "SIGN POST DESIGN GUIDELINE." SHS = STANDARD HIGHWAY SIGNS		**SUB TOTALS**	SF 40.25	SF	EA.	SF	EA. 4.00	FT	FT	FT	FT	FT 60	FT		EA	LB	LB	LB		LB	LB	LB	LB												
		GRAND TOTALS	SF 68.63	SF	EA. 8.00	SF	EA. 9.00	FT			FT 135					LB			EA.	LB				EA.	EA.	LB									

PROJECT NAME: HARTFORD
PROJECT NUMBER: IM 091-2(79)

FILE NAME: s12a132tss_rte5.dgn
PROJECT LEADER: K. HIGGINS
DESIGNED BY: W. LAMMER
US-5 TRAFFIC SIGN SUMMARY SHEET 2

PLOT DATE: 15-DEC-2014
DRAWN BY: K. FRIEDLAND
CHECKED BY: J. SALVATORI
SHEET 63 OF 166

OFFSETS FOR GUARDRAIL FLARE

STATION	OFFSET
STA 246+92.50	27.17' LT
STA 247+29.25	23.17' LT
STA 247+41.75	22.75' LT
STA 247+66.50	21.83' LT
STA 247+91.25	20.92' LT
STA 248+16.00	20.00' LT
STA 248+40.75	19.08' LT
STA 248+65.75	18.08' LT
STA 248+90.50	17.08' LT
STA 249+15.25	16.00' LT

DELINEATOR W/STEEL POST (BLUE)
STA 246+90.00 LT
STA 247+04.00 RT

DELINEATOR W/STEEL POST (GREEN)
STA 149+17.00 RT
STA 251+92.00 LT

ANCHOR FOR STEEL BEAM RAIL
STA 149+34.00 RT
STA 249+42.00 FLT
STA 249+47.00 LT
STA 251+44.00 FLT
STA 251+49.00 LT
STA 251+75.00 LT

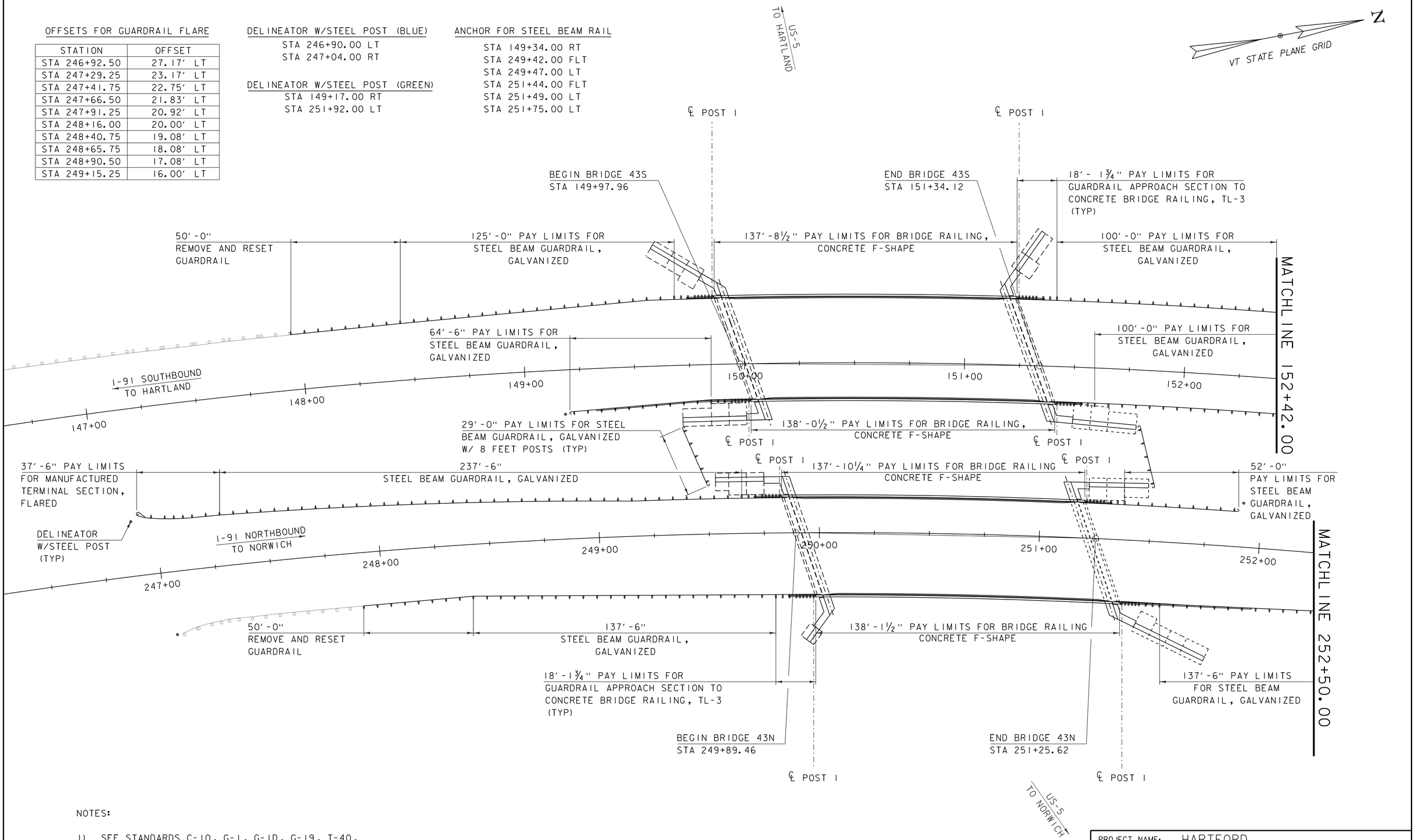

NOTES:

1) SEE STANDARDS C-10, G-1, G-1D, G-19, T-40, T-45, S-363 FOR FURTHER DETAILS.

2) OFFSETS GIVEN FOR GUARDRAIL FLARE ARE TO FACE OF RAIL.

RAIL LAYOUT SHEET 1

SCALE 1" = 20'-0"
20 0 20

PROJECT NAME: HARTFORD	
PROJECT NUMBER: IM 091-2(79)	
FILE NAME: s12a132bdr_rail.dgn	PLOT DATE: 15-DEC-2014
PROJECT LEADER: K. HIGGINS	DRAWN BY: K. FRIEDLAND
DESIGNED BY: J. GRIGAS	CHECKED BY: J. SALVATORI
RAIL LAYOUT SHEET 1	SHEET 64 OF 166

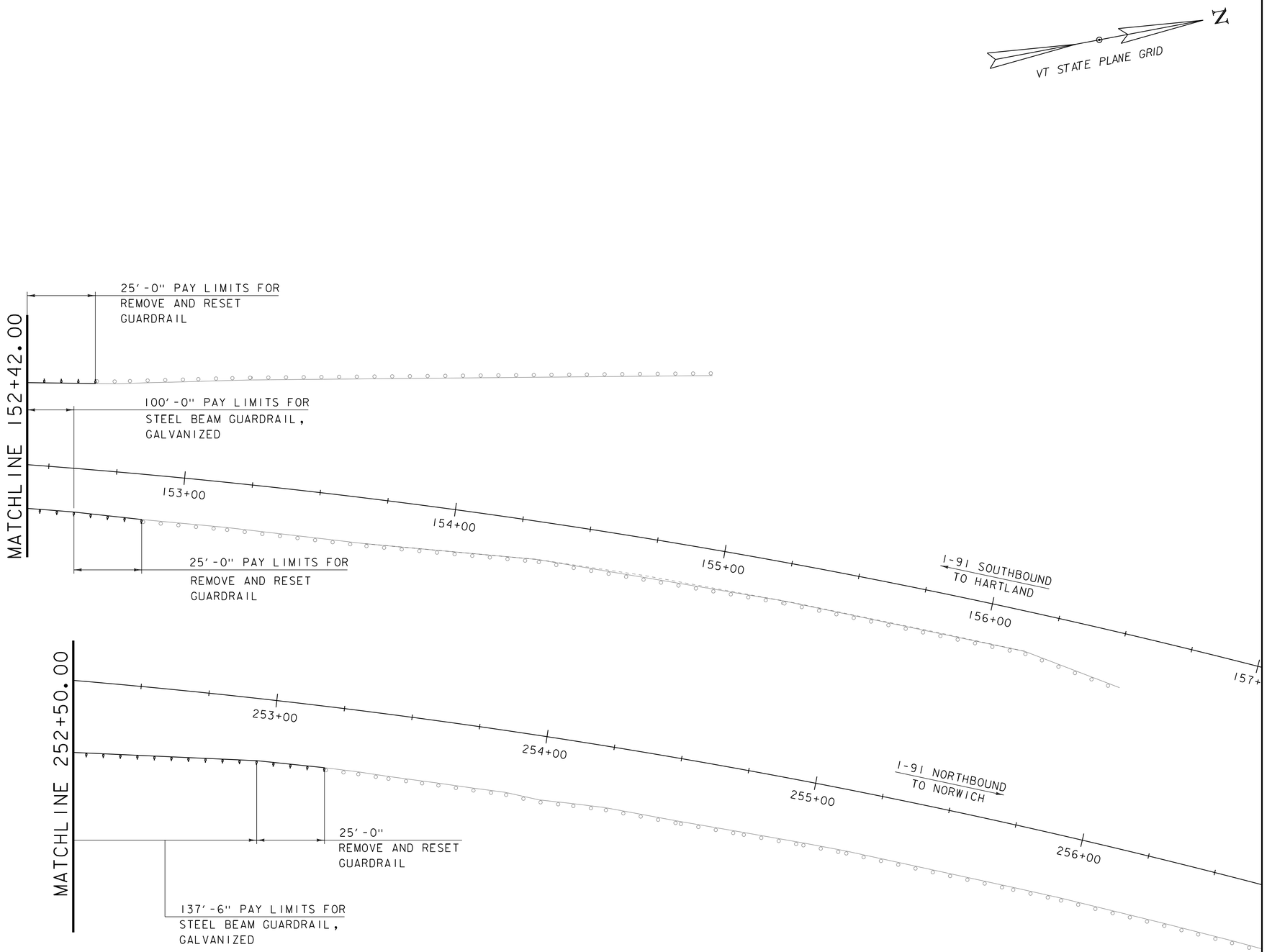

NOTES:

1) SEE STANDARDS C-10, G-1, G-1D, G-19, T-40, T-45, S-363 FOR FURTHER DETAILS.

RAIL LAYOUT SHEET 2

SCALE 1" = 20'-0"

20 0 20

PROJECT NAME: HARTFORD	
PROJECT NUMBER: IM 091-2(79)	
FILE NAME: s12a132bdr_rail.dgn	PLOT DATE: 15-DEC-2014
PROJECT LEADER: K. HIGGINS	DRAWN BY: K. FRIEDLAND
DESIGNED BY: J. GRIGAS	CHECKED BY: J. SALVATORI
RAIL LAYOUT SHEET 2	SHEET 65 OF 166

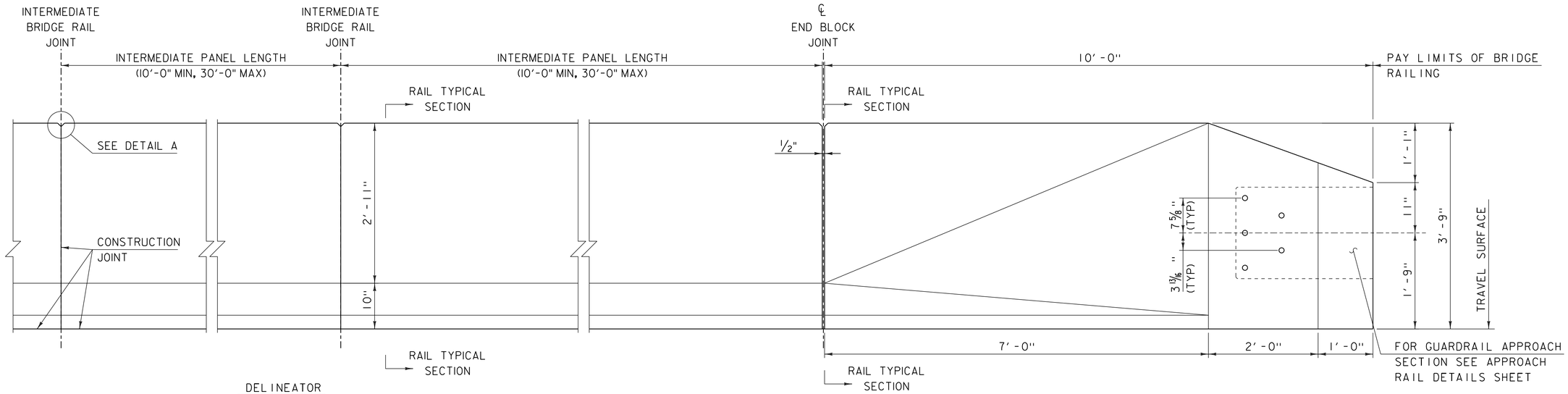

RAILING ELEVATION

NOT TO SCALE

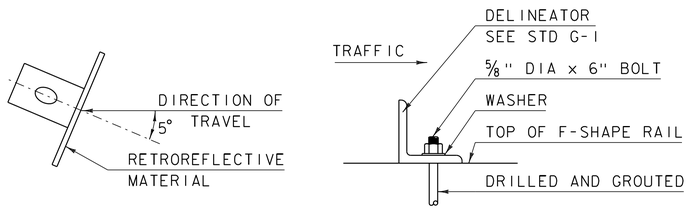

DELINEATOR MOUNTING DETAILS

(NOT TO SCALE)

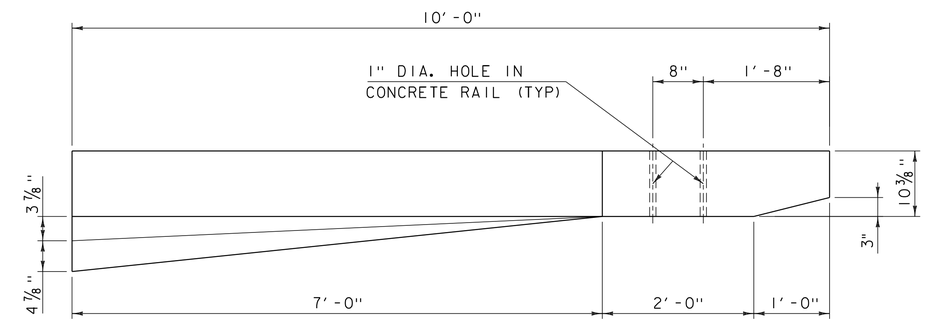

END BLOCK PLAN

SCALE 1"=1'-0"

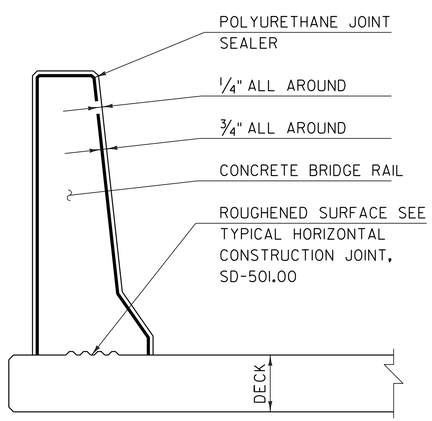

BRIDGE RAIL JOINT SECTION

SCALE 1"=1'-0"

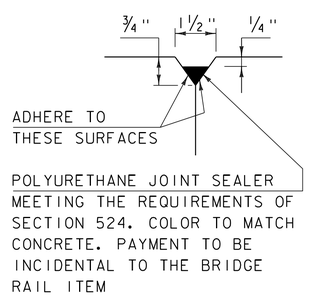

DETAIL "A"

(NOT TO SCALE)

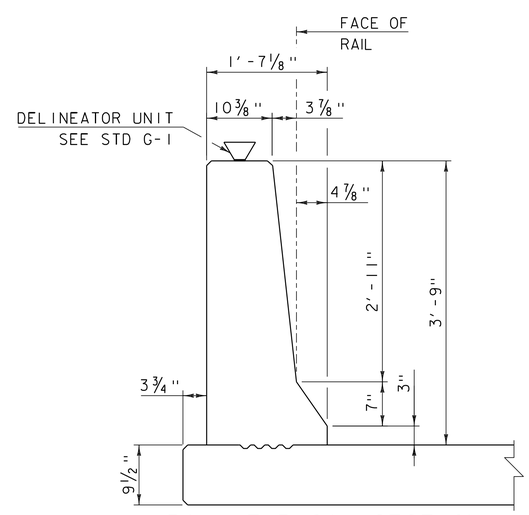

RAIL TYPICAL SECTION

SCALE 1"=1'-0"

CONCRETE RAIL JOINT NOTES

1. CONCRETE RAIL MAY BE PLACED IN ONE CONTINUOUS OPERATION IF AN APPROVED SHRINKAGE REDUCING ADMIXTURE LISTED IN THE SPECIAL PROVISIONS IS USED WITH THE CONCRETE MIX DESIGN. PAYMENT FOR THE SHRINKAGE REDUCING ADMIXTURE WILL BE INCIDENTAL TO THE BRIDGE RAIL CONCRETE ITEM.
2. WHEN BRIDGE RAIL JOINTS ARE USED THE PANELS SHALL BE PLACED IN ALTERNATE SECTIONS WITH A MINIMUM OF 48 HOUR DELAY BETWEEN ADJACENT PLACEMENTS.
3. REINFORCING STEEL SHALL EXTEND THROUGH THE RAIL JOINT.

NOTE:
EF = EACH FACE
3" CLEAR, UNLESS OTHERWISE SPECIFIED ON THE PLANS.
2'-2" BAR LAP UNLESS OTHERWISE SPECIFIED ON THE PLANS.
*** MATCH SLOPE OF NEAREST TRANSVERSE STEEL

NOTES:

1. ALL WORK AND MATERIALS SHALL CONFORM TO SECTION 525.
2. BRIDGE RAILING SHALL HAVE A RUBBED FINISH IN ACCORDANCE WITH SECTION 501.
3. SEE STANDARD DRAWING G-1 FOR DETAILS OF DELINEATORS. A DELINEATOR SHALL BE INSTALLED AT 30 FOOT SPACING. WHITE IS TO BE INSTALLED ON THE DRIVER'S RIGHT. FOR ONE WAY BRIDGES, YELLOW IS TO BE INSTALLED ON THE DRIVER'S LEFT. PAYMENT FOR DELINEATORS SHALL BE INCIDENTAL TO THE BRIDGE RAIL, CONCRETE F-SHAPE TL-5 ITEM.
4. PAYMENT FOR ALL MATERIALS INCLUDING REINFORCING STEEL SHALL INCLUDED IN THE BID PRICE FOR BRIDGE RAIL, CONCRETE F-SHAPE TL-5.

PROJECT NAME: HARTFORD
PROJECT NUMBER: IM 091-2(79)

FILE NAME: s12a132rail_details.dgn
PROJECT LEADER: K. HIGGINS
DESIGNED BY: C. MOONEY
BRIDGE RAIL DETAILS

PLOT DATE: 15-DEC-2014
DRAWN BY: C. MOONEY
CHECKED BY: W. LAMMER
SHEET 66 OF 166

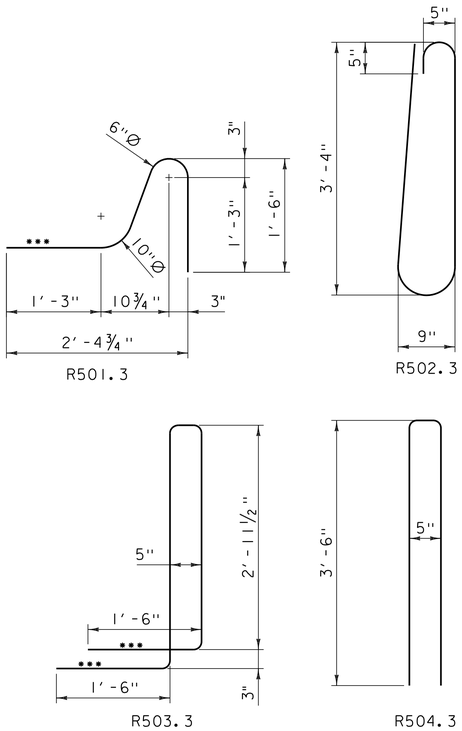

REINFORCING BAR BEND DETAILS

NOT TO SCALE

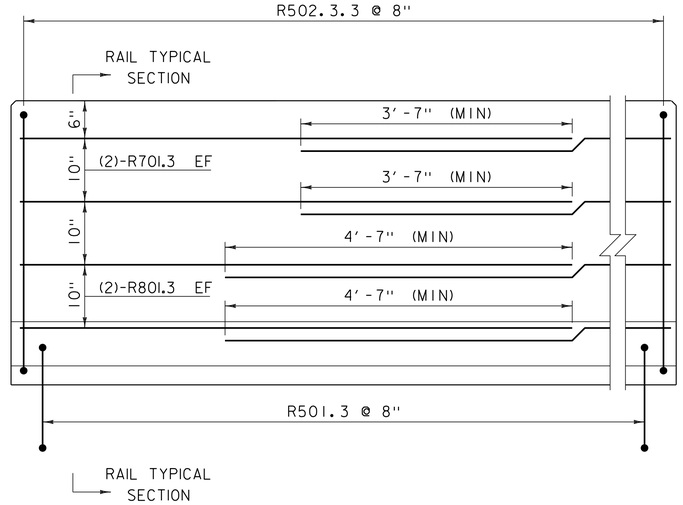

INTERMEDIATE PANEL REINFORCING ELEVATION

NOT TO SCALE

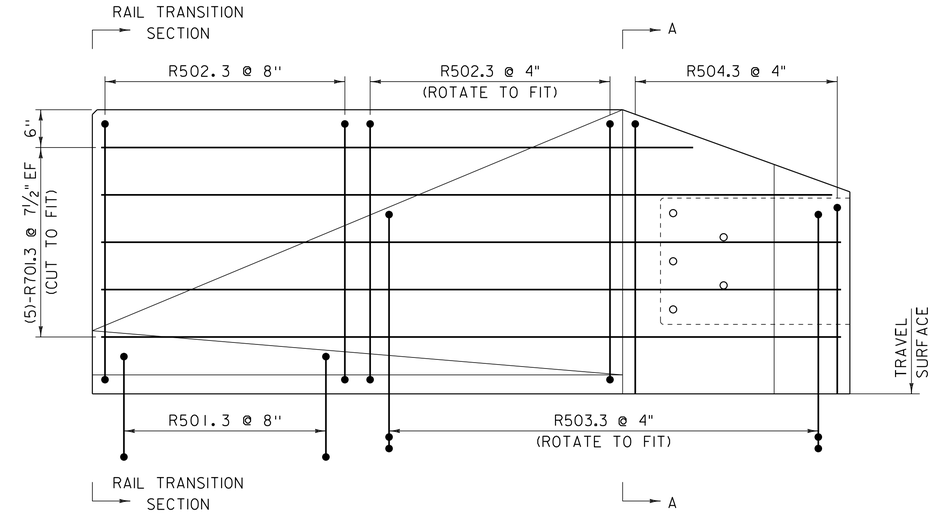

END BLOCK REINFORCING ELEVATION

NOT TO SCALE

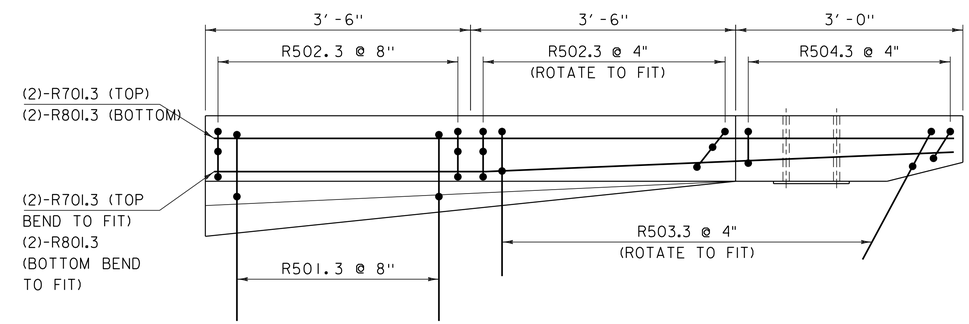

END BLOCK REINFORCING PLAN

NOT TO SCALE

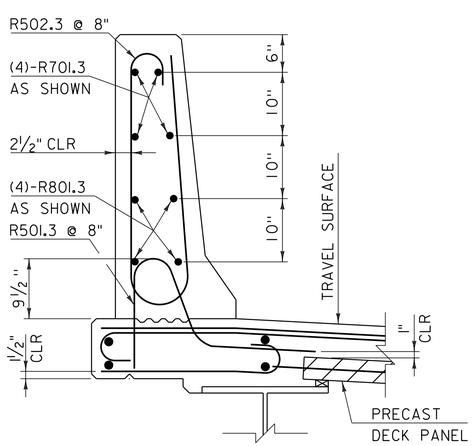

RAIL TYPICAL REINFORCING SECTION

NOT TO SCALE

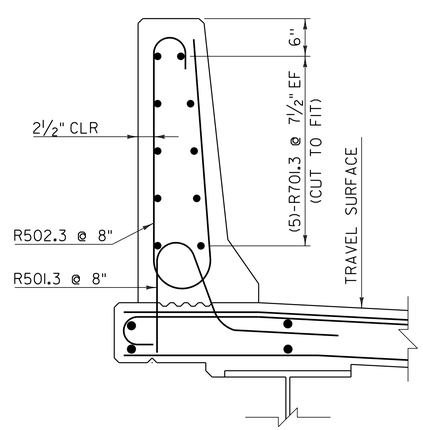

RAIL TRANSITION SECTION

NOT TO SCALE

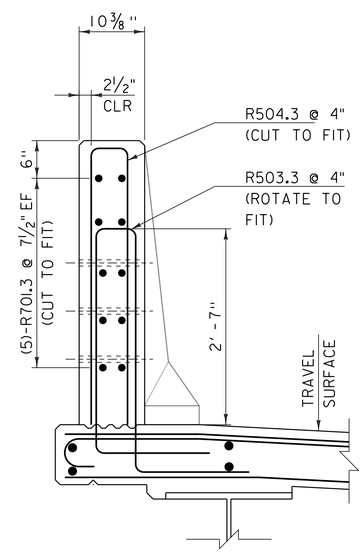

SECTION A-A

NOT TO SCALE

NOTE:
EF = EACH FACE
3" CLEAR, UNLESS OTHERWISE SPECIFIED ON THE PLANS.
2'-2" BAR LAP UNLESS OTHERWISE SPECIFIED ON THE PLANS.
*** MATCH SLOPE OF NEAREST TRANSVERSE STEEL

NOTES

1. ALL REINFORCING STEEL USED IN THE BRIDGE RAIL SHALL BE LEVEL III.

PROJECT NAME: HARTFORD	
PROJECT NUMBER: IM 091-2(79)	
FILE NAME: s12a132rail_details.dgn	PLOT DATE: 15-DEC-2014
PROJECT LEADER: K. HIGGINS	DRAWN BY: C. MOONEY
DESIGNED BY: C. MOONEY	CHECKED BY: W. LAMMER
BRIDGE RAIL REINFORCING DETAILS	SHEET 67 OF 166

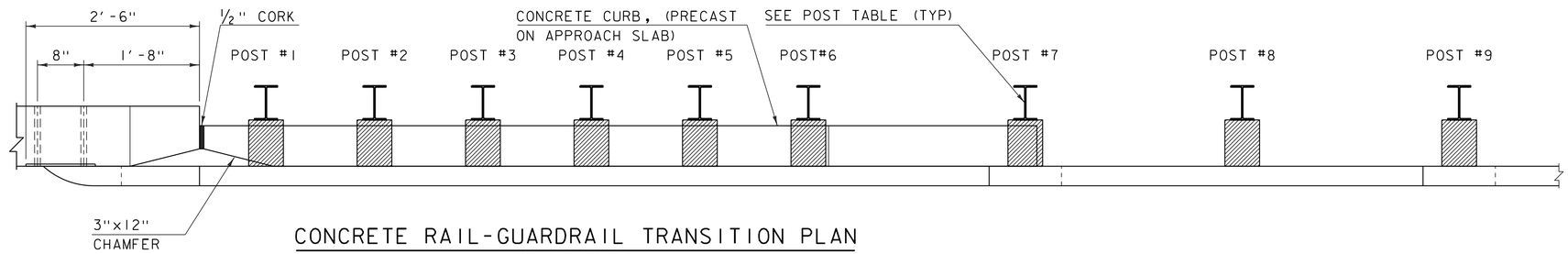

CONCRETE RAIL-GUARDRAIL TRANSITION PLAN

NOT TO SCALE

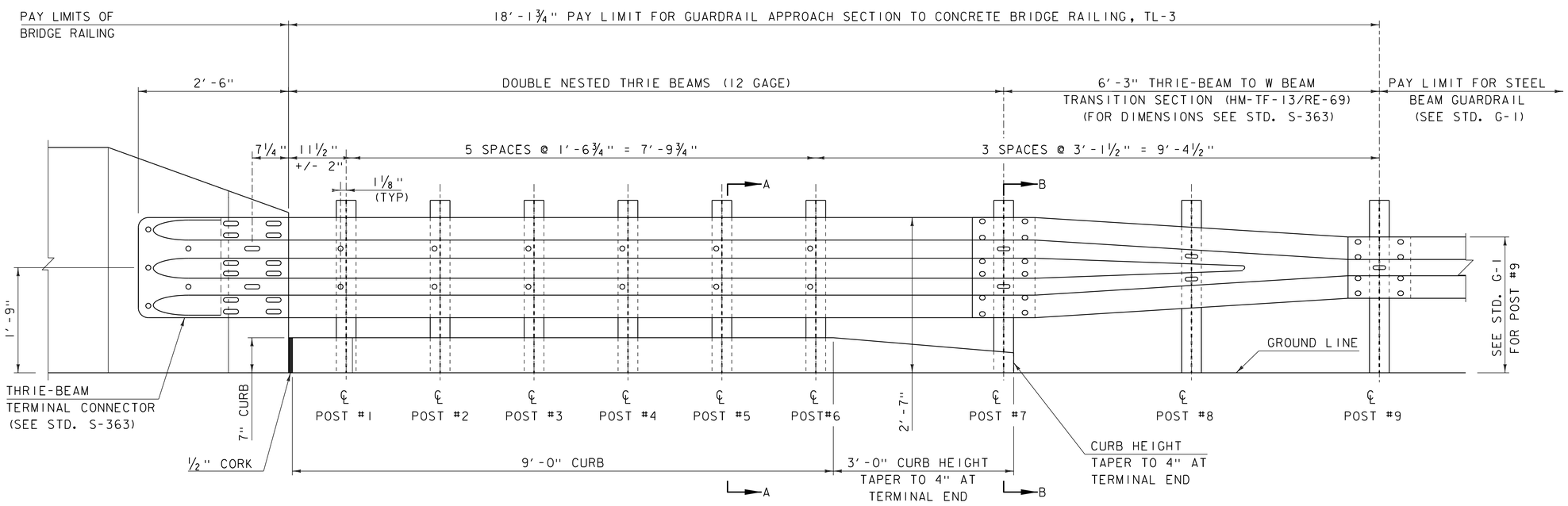

CONCRETE RAIL-GUARDRAIL TRANSITION ELEVATION

NOT TO SCALE

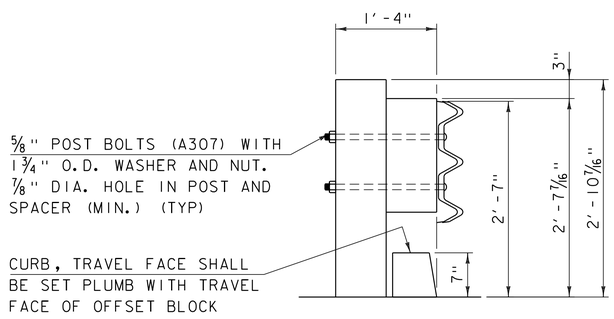

SECTION A-A

NOT TO SCALE

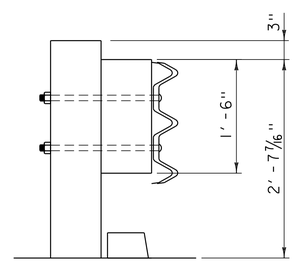

SECTION B-B

NOT TO SCALE

		STEEL	WOOD
SECTION		W6x9	6"X8"
OFFSET BLOCK		6"X8" WOOD	6"X8" RECESSED WOOD
EMBEDMENT DEPTH	POST# 1-6	7'-0"	7'-0"
	POST# 7&8	6'-0"	6'-0"
	POST# 9	SEE STD. G-1	SEE STD. G-1

POST TABLE

NOTES:

1. THRIE-BEAM TERMINAL CONNECTOR SHALL BE INCLUDED IN THE UNIT BID PRICE FOR GUARDRAIL APPROACH SECTION TO CONCRETE BRIDGE RAILING, TL-3.
2. UNLESS OTHERWISE DIRECTED BY THE ENGINEER, A COMPOSITE MATERIAL OFFSET BLOCK FROM THE APPROVED PRODUCTS LIST MAY BE SUBSTITUTED FOR A OFFSET BLOCK OF SIMILAR DIMENSIONS.
3. THIS APPROACH RAILING MEETS THE REQUIREMENTS FOR A NCHRP REPORT 350 TL-3 SERVICE LEVEL.
4. SEE STANDARDS C-10, G-1 AND S-363.

PROJECT NAME: HARTFORD
PROJECT NUMBER: IM 091-2(79)

FILE NAME: s12a132rail_details.dgn
PROJECT LEADER: K. HIGGINS
DESIGNED BY: C. MOONEY
APPROACH RAIL DETAILS

PLOT DATE: 15-DEC-2014
DRAWN BY: C. MOONEY
CHECKED BY: W. LAMMER
SHEET 68 OF 166

US-5
TO HARTLAND

I-91 EXIT 11
SB ON RAMP "A"

N
VT STATE PLANE GRID

I-91 SOUTHBOUND
TO HARTLAND

148+00
149+00
150+00
151+00
152+00
153+00
154+

B-1
B-2
B-3
B-4
B-5
B-6
B-25
B-7
B-8
B-9
B-10
B-11
B-12

248+00
249+00
250+00
251+00
252+00
253+00

B-13
B-14
B-15
B-16
B-17
B-18
B-26
B-27
B-19
B-20
B-21
B-22
B-23
B-24

I-91 NORTHBOUND
TO NORWICH

EXISTING BRIDGE DATA
3 SPAN ROLLED BEAM
LENGTH = 202.0'
WIDTH 37.3' (43N) & 42' (43S)
BUILT IN 1966

US-5
TO NORWICH

EXISTING BORING LAYOUT

SCALE 1" = 20'-0"
20 0 20

PROJECT NAME: HARTFORD	
PROJECT NUMBER: IM 091-2(79)	
FILE NAME: s12a132bor_ex.dgn	PLOT DATE: 15-DEC-2014
PROJECT LEADER: K. HIGGINS	DRAWN BY: K. FRIEDLAND
DESIGNED BY: W. LAMMER	CHECKED BY: W. LAMMER
EXISTING BORING LAYOUT	SHEET 69 OF 166

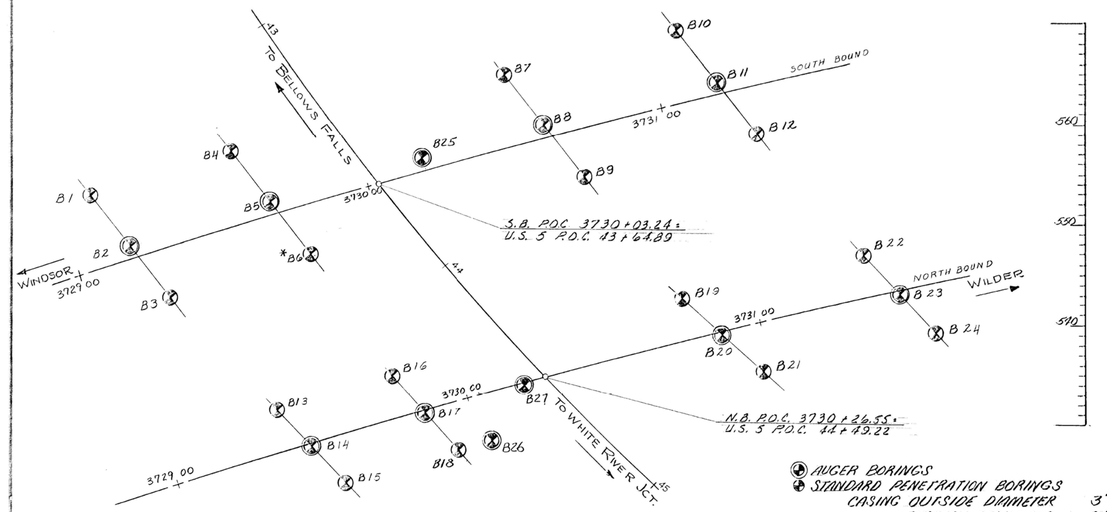

AUGER BORINGS
STANDARD PENETRATION BORINGS

CASING OUTSIDE DIAMETER	3"
INSIDE DIAMETER	2 1/4"
WEIGHT OF HAMMER	350"
HAMMER FALL	24"
SAMPLER OUTSIDE DIAMETER	2"
INSIDE DIAMETER	1 3/8"
WEIGHT OF HAMMER	140"
HAMMER FALL	30"

BORING PLAN LAYOUT

SCALE 1"=20'-0

Additional Auger Borings (not plotted)

Station	Offset	Ground Elevation	Depth to Bedrock or Refusal
3731+30 NB	16' Lt.	541.8	14.0'
3731+43 NB	4' Rt.	542.3	10.0'
3731+54 NB	33' Rt.	543.4	10.0'

BORING NO	STATION	OFFSET FROM ℄
	SOUTH BOUND	
B1	3729+12	24 Lt
B2	3729+19	4 Lt
B3	3729+26	16 Rt
B4	3729+60	24 Lt
B5	3729+67	4 Lt
*B6	3729+75	16 Rt
B7	3730+53	24 Lt
B8	3730+62	4 Lt
B9	3730+70	16 Rt
B10	3731+11	24 Lt
B11	3731+20	4 Lt
B12	3731+29	16 Rt
	NORTH BOUND	
B13	3729+39	14 Lt
B14	3729+46	1 Rt
B15	3729+53	16 Rt
B16	3729+78	14 Lt
B17	3729+85	1 Rt
B18	3729+92	16 Rt
B19	3730+77	14 Lt
B20	3730+87	1 Rt
B21	3730+97	16 Rt
B22	3731+38	14 Lt
B23	3731+47	1 Rt
B24	3731+56	16 Rt

* BORINGS NOT TAKEN

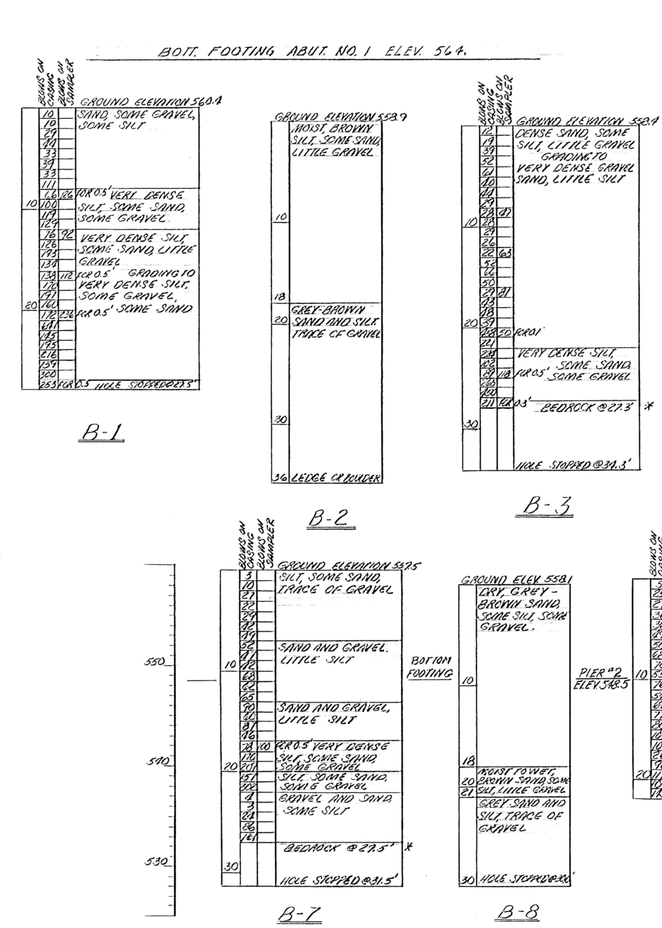

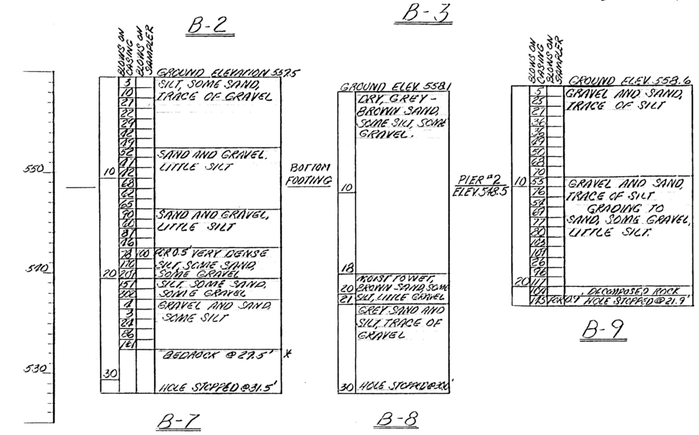

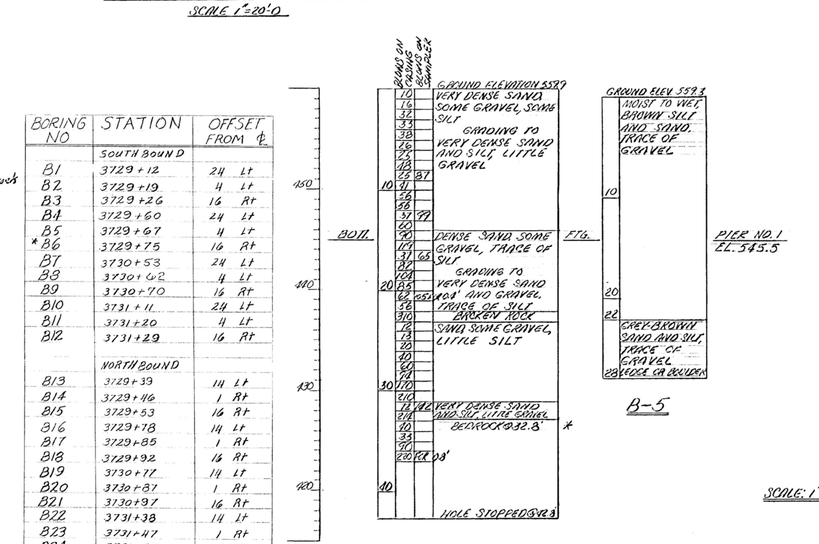

SCALE: 1"= 6'-0

ITEM NO.	ITEM	UNIT	NET	OVERRUN	TOTAL	FINAL
106-A	CHAN. EXCAV. OF EARTH	C.Y.				
106-B	CHAN. EXCAV. OF ROCK	C.Y.				
106-C	UNCLASS. CHAN. EXCAV.	C.Y.				
107	STRUCT. EXCAV.	C.Y.				
201-B	CONC. CLASS B (MOD.)	C.Y.				
402	REINF. STEEL	LBS.				
507	ASPHALTIC-ASB. COATING	S.Y.				
507-B	TREATED TIMBER PILING	L.F.				
508	SPLICES FOR STEEL PILING	EA.				
501	STEEL PILING	L.F.				
502-A	UNTREATED TIMBER PILING	L.F.				

STATE OF VERMONT
DEPARTMENT OF HIGHWAYS

TOWN OF HARTFORD
ROUTE No. I-91 LOG STA.
INTERSTATE OVER US 5
BORING PLAN
SCALE AS SHOWN
SURVEYED BY
DRAWN BY Tessier & Sons CHECKED BY R.B.H. & RLO
PROJECT No. I 91-2 (2)
SHEET 92 OF 119

BR 10.4 of 12.4

EXISTING BORING LOGS SHEET 1

NOT TO SCALE

PROJECT NAME: HARTFORD	
PROJECT NUMBER: IM 091-2(79)	
FILE NAME: s12a132bor_logs_ex.dgn	PLOT DATE: 15-DEC-2014
PROJECT LEADER: K. HIGGINS	DRAWN BY: K. FRIEDLAND
DESIGNED BY: W. LAMMER	CHECKED BY: J. SALVATORI
EXISTING BORING LOGS SHEET 1	SHEET 70 OF 166

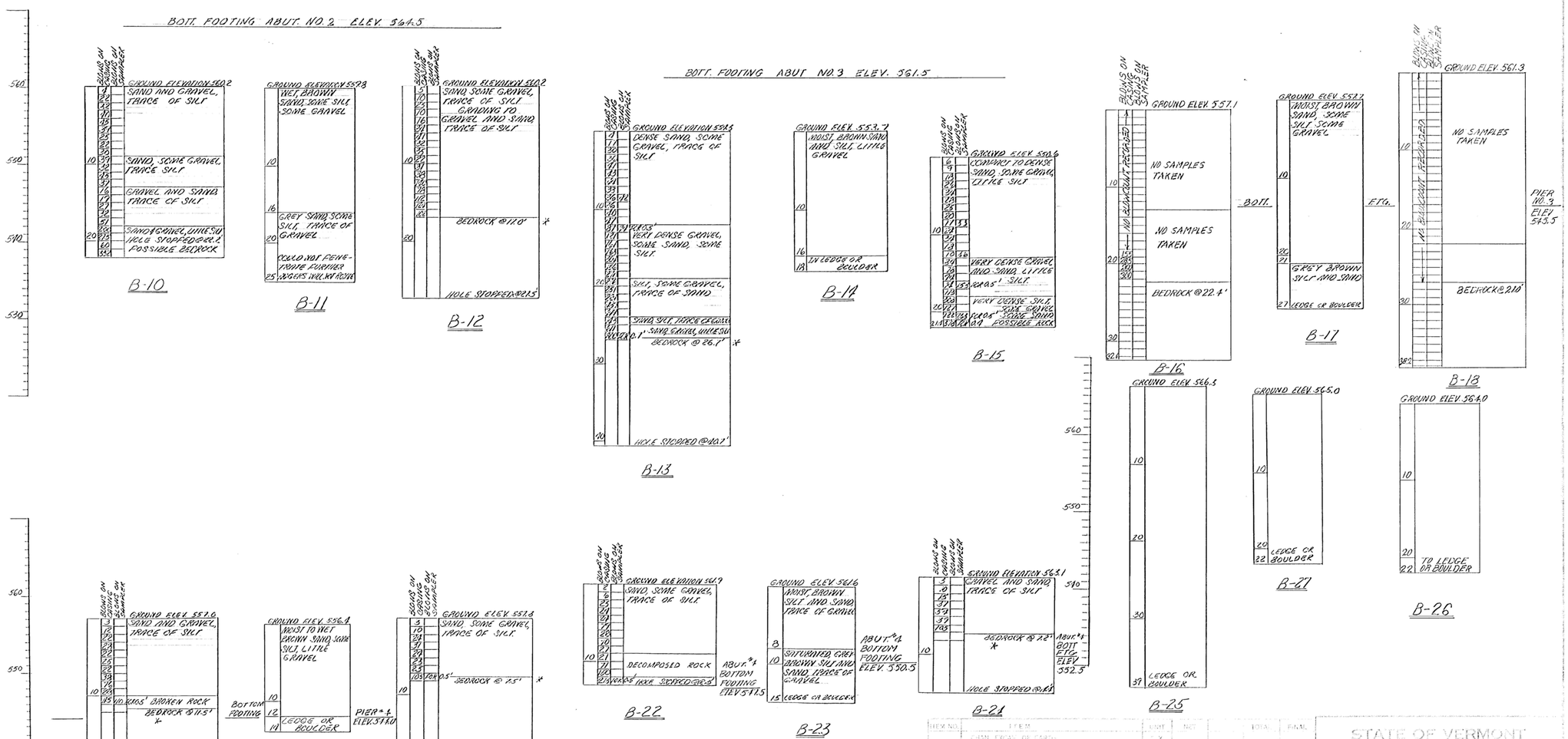

*-LEDGE DESCRIPTION:-

"Ordovdville Formation - Post Pond Volcanics Member" Greenstone and green chloritic schist interbedded with schistose felsite and quartz-feldspar-sericite schist; also fine grained chloritic and biotitic gneiss.

BR 105 of 124

EXISTING BORING LOGS SHEET 2

NOT TO SCALE

PROJECT NAME: HARTFORD	
PROJECT NUMBER: IM 091-2(79)	
FILE NAME: sl2al32bor_logs_ex.dgn	PLOT DATE: 15-DEC-2014
PROJECT LEADER: K. HIGGINS	DRAWN BY: K. FRIEDLAND
DESIGNED BY: W. LAMMER	CHECKED BY: J. SALVATORI
EXISTING BORING LOGS SHEET 2	SHEET 71 OF 166

SOIL CLASSIFICATION

AASHTO

A1	Gravel and Sand
A3	Fine Sand
A2	Silty or Clayey Gravel and Sand
A4	Silty Soil - Low Compressibility
A5	Silty Soil - Highly Compressible
A6	Clayey Soil - Low Compressibility
A7	Clayey Soil - Highly Compressible

ROCK QUALITY DESIGNATION

R.Q.D. (%)	ROCK DESCRIPTION
<25	Very Poor
25 to 50	Poor
51 to 75	Fair
76 to 90	Good
>90	Excellent

SHEAR STRENGTH

UNDRAINED SHEAR STRENGTH IN P.S.F.	CONSISTENCY
<250	Very Soft
250-500	Soft
500-1000	Med. Stiff
1000-2000	Stiff
2000-4000	Very Stiff
>4000	Hard

CORRELATION GUIDE OF "N" TO DENSITY/CONSISTENCY

DENSITY (GRANULAR SOILS) N	DESCRIPTIVE TERM	CONSISTENCY (COHESIVE SOILS) N	DESCRIPTIVE TERM
<5	Very Loose	<2	Very Soft
5-10	Loose	2-4	Soft
11-24	Med. Dense	5-8	Med. Stiff
25-50	Dense	9-15	Stiff
>50	Very Dense	16-30	Very Stiff
		31-60	Hard
		>60	Very Hard

COMMONLY USED SYMBOLS

▼	Water Elevation
⊗	Standard Penetration Boring
⊕	Auger Boring
⊙	Rod Sounding
S	Sample
N	Standard Penetration Test Blow Count Per Foot For: 2" O.D. Sampler 1 3/8" I.D. Sampler Hammer Weight Of 140 Lbs. Hammer Fall Of 30"
VS	Field Vane Shear Test
US	Undisturbed Soil Sample
B	Blast
DC	Diamond Core
MD	Mud Drill
WA	Wash Ahead
HSA	Hollow Stem Auger
AX	Core Size 1 1/8"
BX	Core Size 1 5/8"
NX	Core Size 2 1/8"
M	Double Tube Core Barrel Used
LL	Liquid Limit
PL	Plastic Limit
PI	Plasticity Index
NP	Non Plastic
w	Moisture Content (Dry Wgt. Basis)
D	Dry
M	Moist
MTW	Moist To Wet
W	Wet
Sat	Saturated
Bo	Boulder
Gr	Gravel
Sa	Sand
Si	Silt
Cl	Clay
HP	Hardpan
Le	Ledge
NLTD	No Ledge To Depth
CNPF	Can Not Penetrate Further
TLOB	Top of Ledge Or Boulder
NR	No Recovery
Rec.	Recovery
%Rec.	Percent Recovery
RQD	Rock Quality Designation
CBR	California Bearing Ratio
<	Less Than
>	Greater Than
R	Refusal (N > 100)
VTSPG	NAD83 - See Note 7

COLOR

blk	Black	pnk	Pink
bl	Blue	pu	Purple
brn	Brown	rd	Red
dk	Dark	tn	Tan
gry	Gray	wh	White
gn	Green	yel	Yellow
lt	Light	mltc	Multicolored
or	Orange		

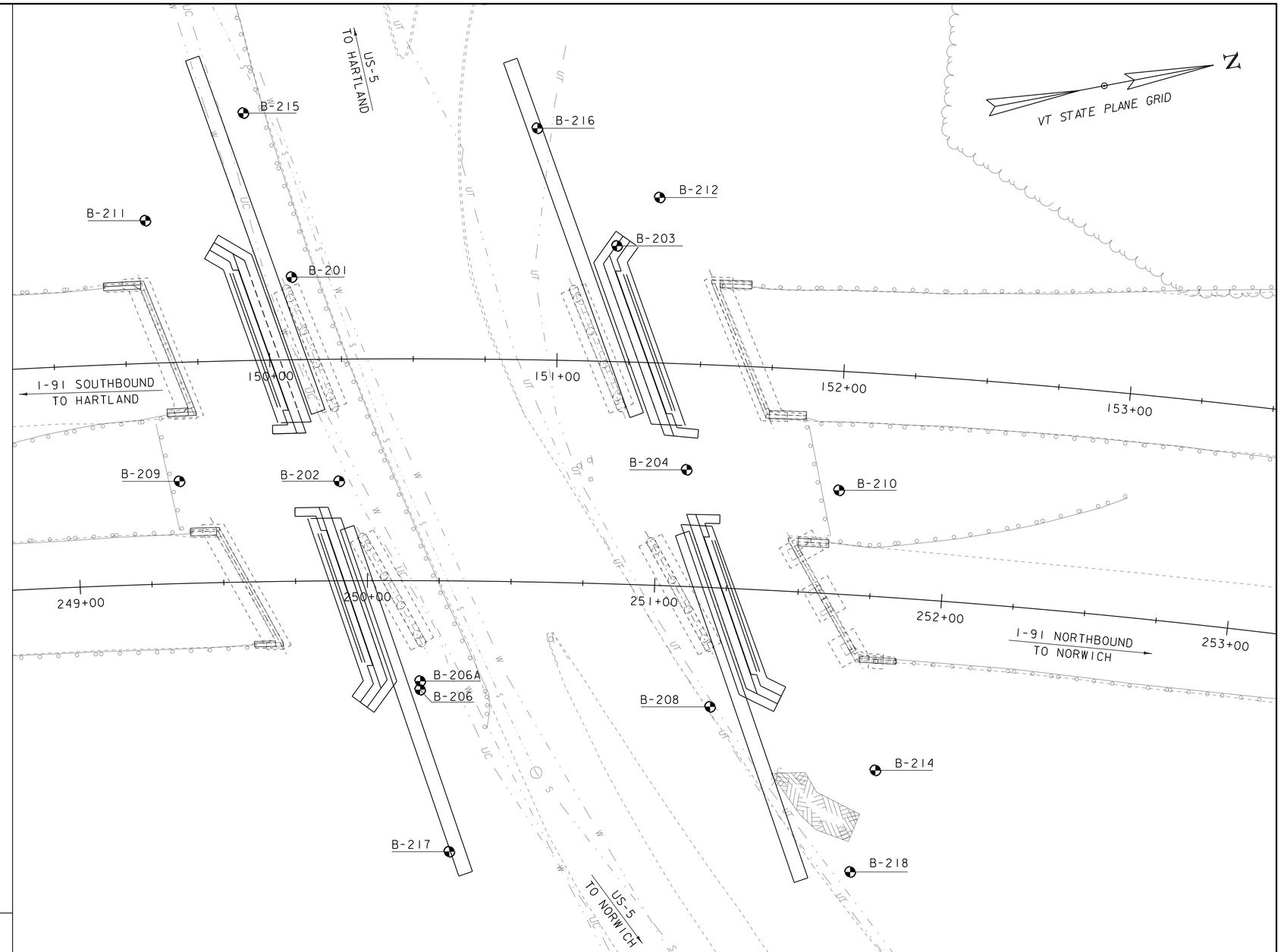

DEFINITIONS (AASHTO)

BEDROCK (LEDGE) - Rock in its native location of indefinite thickness.

BOULDER - A rock fragment with an average dimension > 12 inches.

COBBLE - Rock fragments with an average dimension between 3 and 12 inches.

GRAVEL - Rounded particles of rock < 3" and > 0.0787" (#10 sieve).

SAND - Particles of rock < 0.0787" (#10 sieve) and > 0.0029" (#200 sieve).

SILT - Soil < 0.0029" (#200 sieve), non or slightly plastic and exhibits no strength when air-dried.

CLAY - Fine grained soil, exhibits plasticity when moist and considerable strength when air-dried.

VARVED - Alternate layers of silt and clay.

HARDPAN - Extremely dense soil, cemented layer, not softened when wet.

MUCK - Soft organic soil (containing > 10% organic material.

MOISTURE CONTENT - Weight of water divided by dry weight of soil.

FLOWING SAND - Granular soil so saturated (loose) that it flows into drill casing during extraction of wash rod.

STRIKE - Angle from magnetic north to line of intersection of bed with a horizontal plane.

DIP - Inclination of bed with a horizontal plane.

The subsurface explorations shown herein were made between 3/25/14 and 5/15 by the Agency.

Soil and rock classifications, properties and descriptions are based on engineering interpretation from available subsurface information by the Agency and may not necessarily reflect actual variations in subsurface conditions that may be encountered between individual boring or sample locations.

Observed water levels and/or conditions indicated are as recorded at the time of exploration and may vary according to the prevailing rainfall, methods of exploration and other factors.

GENERAL NOTES

4. Engineering judgment was exercised in preparing the subsurface information presented herein. Analysis and interpretation of subsurface data was performed and interpreted for Agency design and estimating purposes. Presentation of the information in the Contract is intended to provide the Contractor access to the same data available to the Agency. The subsurface information is presented in good faith and is not intended as a substitute for personal investigation, independent interpretation, independent analysis or judgment by the Contractor.

5. Pictorial structure details shown on the boring plan layout or soils profile are for illustrative purposes only and may not accurately portray final contract details.

6. Terminology used on boring logs to describe the hardness, degree of weathering, and spacing of fractures, joints and other discontinuities in the bedrock is defined in the AASHTO Manual on Subsurface Investigations, 1988.

7. Northing and Easting coordinates are shown in Vermont State Plane Grid North American Datum 1983 in meters and survey feet.

BORING LAYOUT SHEET

SCALE 1" = 20'-0"

20 0 20

PROJECT NAME: HARTFORD

PROJECT NUMBER: IM 091-2(79)

FILE NAME: s12a132bor_new.dgn	PLOT DATE: 15-DEC-2014
PROJECT LEADER: K. HIGGINS	DRAWN BY: W. LAMMER
DESIGNED BY: W. LAMMER	CHECKED BY: J. SALVATORI
BORING LAYOUT SHEET	SHEET 72 OF 166

STATE OF VERMONT
AGENCY OF TRANSPORTATION
MATERIALS & RESEARCH SECTION
SUBSURFACE INFORMATION

BORING LOG

Hartford, VT

I91 Bridge 43 N/S

Boring No.: B-201
Page No.: 1 of 2
Pin No.: s12a132
Checked By: ASP

Boring Crew: Drilex/Jason, MJR
Date Started: 3/31/14 Date Finished: 4/01/14
VTSPG NAD83: N 417499.15 ft E 1683209.44 ft
Station: 150+08.07 Offset: -28.75
Ground Elevation: 552.05 ft

	Casing	Sampler
Type:	Auger/WB	SS
I.D.:	4.5 in	2 in
Hammer Wt:	300 lb.	140 lb.
Hammer Fall:	N.A.	30 in.
Hammer/Rod Type:	Auto	
Rig:	CME 50	CE = 1.33

Groundwater Observations

Date	Depth (ft)	Notes
04/01/14	0.0	Due to water used during drilling

Depth (ft)	Strata (1)	CLASSIFICATION OF MATERIALS (Description)	Run (Dip deg.)	Core Rec. % (RQD %)	Drill Rate minutes/ft	Blows/6" (N Value)	Moisture Content %	Gravel %	Sand %	Fines %
2.5		A-2-4, SaSiGr, Auger sample (FILL)					19.1	19.6	54.2	26.2
5.0		A-2-4, SaSiGr, Rec. = 1.83 ft				8-17-19-20 (36)	13.5	14.4	51.6	34.0
7.5										
10.0		A-2-4, SaSiGr, Rec. = 1.5 ft				8-10-13-19 (23)	14.4	19.7	48.8	31.5
12.5										
15.0		A-2-4, GrSaSi, Rec. = 0.33 ft				17-30/2" (30+)	12.1	35.3	33.9	30.8
17.5										
20.0		A-4, SiSaGr, Rec. = 1.42 ft				10-24-32-46 (56)	11.8	26.9	35.2	37.9
22.5										

Notes:
1. Stratification lines represent approximate boundary between material types. Transition may be gradual.
2. N Values have not been corrected for hammer energy. CE is the hammer energy correction factor. CE is an estimated value.
3. Water level readings have been made at times and under conditions stated.
Fluctuations of groundwater may occur due to other factors than those present at the time measurements were made.
4. Ground surface elevations indicated on the boring logs were estimated based on the grading plan provided by VAOT.

Terracon

2010 COPY J114515.GPJ VERMONT AOT.GDT 5/30/14

STATE OF VERMONT
AGENCY OF TRANSPORTATION
MATERIALS & RESEARCH SECTION
SUBSURFACE INFORMATION

BORING LOG

Hartford, VT

I91 Bridge 43 N/S

Boring No.: B-201
Page No.: 2 of 2
Pin No.: s12a132
Checked By: ASP

Boring Crew: Drilex/Jason, MJR
Date Started: 3/31/14 Date Finished: 4/01/14
VTSPG NAD83: N 417499.15 ft E 1683209.44 ft
Station: 150+08.07 Offset: -28.75
Ground Elevation: 552.05 ft

	Casing	Sampler
Type:	Auger/WB	SS
I.D.:	4.5 in	2 in
Hammer Wt:	300 lb.	140 lb.
Hammer Fall:	N.A.	30 in.
Hammer/Rod Type:	Auto	
Rig:	CME 50	CE = 1.33

Groundwater Observations

Date	Depth (ft)	Notes
04/01/14	0.0	Due to water used during drilling

Depth (ft)	Strata (1)	CLASSIFICATION OF MATERIALS (Description)	Run (Dip deg.)	Core Rec. % (RQD %)	Drill Rate minutes/ft	Blows/6" (N Value)	Moisture Content %	Gravel %	Sand %	Fines %
		A-2-4, SaSiGr, Rec. = 1.33 ft				27-32-55/5" (55+)	11.3	28.5	36.7	34.8
27.5		Split spoon refusal, Weathered bedrock								
30.0		29.5 ft – 35.5 ft, Gray-green ANDESITE, hard, fresh 45° and 30° joint sets, smooth, open, moderately close. Upper 7 inches and lower 6 inches highly fractured and weathered	1	28 (11)	2 1 0.75 0.75 0.5					
32.5										
35.0		35.5 ft – 39.5 ft, Gray-green ANDESITE, hard,slight weathering in top 9 inches, 45° and 75° joint sets, very close. Bottom 31 inches, fresh weathering, 80° and 45° joint sets, moderately close, tight. Thinly foliated. Open hole coring changed to spin 4-inch casing to 39 feet.	3	67 (56)	3 2.5 3.5 2.5					
37.5										
		39.0 ft – 44.0 ft, Gray-green ANDESITE, very hard, slight to moderate weathering, 85°, 0°, 45° joint sets, very close to moderately close, quartz infilling.			2					
40.0			5	87 (70)	2 2 2.75 2.5					
42.5										
		Hole stopped @ 44.0 ft			3.5					
45.0										
47.5										

Notes:
1. Stratification lines represent approximate boundary between material types. Transition may be gradual.
2. N Values have not been corrected for hammer energy. CE is the hammer energy correction factor. CE is an estimated value.
3. Water level readings have been made at times and under conditions stated.
Fluctuations of groundwater may occur due to other factors than those present at the time measurements were made.
4. Ground surface elevations indicated on the boring logs were estimated based on the grading plan provided by VAOT.

Terracon

2010 COPY J114515.GPJ VERMONT AOT.GDT 5/30/14

PROJECT NAME: HARTFORD
PROJECT NUMBER: IM 091-2(79)

FILE NAME: s12a132bor_new.dgn
PROJECT LEADER: K. HIGGINS
DESIGNED BY: W. LAMMER
BORING LOGS 1

PLOT DATE: 15-DEC-2014
DRAWN BY: W. LAMMER
CHECKED BY: J. SALVATORI
SHEET 73 OF 166

STATE OF VERMONT
AGENCY OF TRANSPORTATION
MATERIALS & RESEARCH SECTION
SUBSURFACE INFORMATION

BORING LOG

HARTFORD
IM 91-2(79)
I-91 BR-43

Boring No.: **B-202**
Page No.: 1 of 1
Pin No.: 12A132
Checked By: BLS

Boring Crew: DAIGNEAULT, NIETO, HOOK
Date Started: 5/06/14 Date Finished: 5/07/14
VTSPG NAD83: N 417502.25 ft E 1683282.33 ft
Station: 150+23.81 Offset: 42.49
Ground Elevation: 551.6 ft

	Casing	Sampler
Type:	WB	SS
I.D.:	4 in	1.5 in
Hammer Wt:	N.A.	140 lb.
Hammer Fall:	N.A.	30 in.
Hammer/Rod Type:	Auto/AWJ	
Rig:	CME 55 TRACK	C. = 1.46

Groundwater Observations

Date	Depth (ft)	Notes
05/07/14	5.1	AM

Depth (ft)	Strata (1)	CLASSIFICATION OF MATERIALS (Description)	Run (Dip deg.)	Core Rec. % (RQD %)	Drill Rate minutes/ft	Blows/6" (N Value)	Moisture Content %	Gravel %	Sand %	Fines %
		A-2-4, GrSiSa, brn, Moist, Rec. = 1.1 ft, Lab Note: Roots, grass, and Broken Rock were within sample.				WH-2-4-11 (6)	13.2	27.2	42.1	30.7
		Field Note:, Roller Coned ahead and cleaned out casing.								
5		A-2-4, SiGrSa, brn, MTW, Rec. = 1.0 ft, Lab Note: Broken Rock was within sample.				11-14-18-28 (32)	13.2	33.0	37.5	29.5
		Field Note:, Roller Coned ahead and cleaned out casing.								
10		A-4, SaSi, gry, MTW, Rec. = 1.5 ft				19-31-39-R@1.0" (70)	12.5	16.9	33.9	49.2
		Field Note:, Roller Coned ahead and cleaned out casing.								
15		A-4, GrSaSi, gry, MTW, Rec. = 1.0 ft, Lab Note: Broken Rock was within sample.				12-30-48-R@1.0" (78)	11.5	25.0	28.2	46.8
		Field Note:, Roller Coned ahead and cleaned out casing.								
20		Visual Description:, Broken Rock with silty sand, gry, Moist, Rec. = 0.2 ft, Insufficient sample for testing.				R@2.5" (R)				
		Field Note:, NXDC								
25		25.0 ft - 30.0 ft, Dark-greenish-gray to medium-bluish-gray metamorphosed andesitic and basaltic Tuff, Moderately hard, Moderately weathered, Poor rock, NXMDC, Staining along fractures. RMR = 36	1 (85)	36 (0)	3 5 7 5 10	Top of Bedrock @ 25.0 ft				
30		30.0 ft - 35.0 ft, Dark-greenish-gray to medium-bluish-gray metamorphosed andesitic and basaltic Tuff, Moderately hard, Moderately weathered, Poor rock, NXMDC, Staining along fractures near end of run. RMR = 41	2 (85)	100 (48)	5 5 4 5 3					
35		Hole stopped @ 35.0 ft								
40		Remarks: Hole collapsed at 7.0 ft.								
45										

Notes:
1. Stratification lines represent approximate boundary between material types. Transition may be gradual.
2. N Values have not been corrected for hammer energy. C is the hammer energy correction factor.
3. Water level readings have been made at times and under conditions stated. Fluctuations may occur due to other factors than those present at the time measurements were made.

BORING LOG 2 HARTFORD IM 91-2(79).GPJ VERMONT AOT.GDT 5/30/14

PROJECT NAME: HARTFORD
PROJECT NUMBER: IM 091-2(79)

FILE NAME: s12a132bor_new.dgn
PROJECT LEADER: K. HIGGINS
DESIGNED BY: W. LAMMER
BORING LOGS 2

PLOT DATE: 15-DEC-2014
DRAWN BY: W. LAMMER
CHECKED BY: J. SALVATORI
SHEET 74 OF 166

STATE OF VERMONT
AGENCY OF TRANSPORTATION
MATERIALS & RESEARCH SECTION
SUBSURFACE INFORMATION

BORING LOG

Hartford, VT

I91 Bridge 43 N/S

Boring No.: B-203
Page No.: 1 of 2
Pin No.: s12a132
Checked By: ASP

Boring Crew: Drilex/Jason, MJR
Date Started: 4/02/14 Date Finished: 4/02/14
VTSPG NAD83: N 417612.48 ft E 1683219.83 ft
Station: 151+19.83 Offset: -40.28
Ground Elevation: 559.25 ft

	Casing	Sampler
Type:	Auger/WB	SS
I.D.:	4.5 in	2 in
Hammer Wt:	300 lb.	140 lb.
Hammer Fall:	N.A.	30 in.
Hammer/Rod Type:	Auto	
Rig:	CME 50	CE = 1.33

Groundwater Observations

Date	Depth (ft)	Notes
04/02/14	0.0	Due to water used during drilling

Depth (ft)	Strata (1)	CLASSIFICATION OF MATERIALS (Description)	Run (Dip deg.)	Core Rec. % (RQD %)	Drill Rate minutes/ft	Blows/6" (N Value)	Moisture Content %	Gravel %	Sand %	Fines %
2.5										
5.0		A-1-b, SaGrSi, Rec. = 1.17 ft, (FILL)				47-21-19-27 (40)	8.0	37.0	39.8	23.2
7.5										
10.0		No recovery, Rec. = 0.0 ft, (FILL)				18-32-32-32 (64)				
12.5										
15.0		A-1-b, GrSaSi, Rec. = 0.33 ft				7-8-8-9 (16)	10.3	58.3	29.6	12.1
17.5										
20.0		A-4, SiSaGr, Rec. = 1.08 ft				10-19-24-36 (43)	10.9	25.0	35.7	39.3
22.5		Weathered bedrock								
		23.0 ft - 28.0 ft, Gray/brown ANDESITE, hard, very slight weathering, 0°, 45°, 80° joint sets, smooth, close, extensive quartz filling of joints/foliation.	1	75 (67)	3 3					

Notes:
1. Stratification lines represent approximate boundary between material types. Transition may be gradual.
2. N Values have not been corrected for hammer energy. CE is the hammer energy correction factor. CE is an estimated value.
3. Water level readings have been made at times and under conditions stated.
Fluctuations of groundwater may occur due to other factors than those present at the time measurements were made.
4. Ground surface elevations indicated on the boring logs were estimated based on the grading plan provided by VAOT.

Terracon

2010 COPY J1145115.GPJ VERMONT AOT.GDT 5/30/14

STATE OF VERMONT
AGENCY OF TRANSPORTATION
MATERIALS & RESEARCH SECTION
SUBSURFACE INFORMATION

BORING LOG

Hartford, VT

I91 Bridge 43 N/S

Boring No.: B-203
Page No.: 2 of 2
Pin No.: s12a132
Checked By: ASP

Boring Crew: Drilex/Jason, MJR
Date Started: 4/02/14 Date Finished: 4/02/14
VTSPG NAD83: N 417612.48 ft E 1683219.83 ft
Station: 151+19.83 Offset: -40.28
Ground Elevation: 559.25 ft

	Casing	Sampler
Type:	Auger/WB	SS
I.D.:	4.5 in	2 in
Hammer Wt:	300 lb.	140 lb.
Hammer Fall:	N.A.	30 in.
Hammer/Rod Type:	Auto	
Rig:	CME 50	CE = 1.33

Groundwater Observations

Date	Depth (ft)	Notes
04/02/14	0.0	Due to water used during drilling

Depth (ft)	Strata (1)	CLASSIFICATION OF MATERIALS (Description)	Run (Dip deg.)	Core Rec. % (RQD %)	Drill Rate minutes/ft	Blows/6" (N Value)	Moisture Content %	Gravel %	Sand %	Fines %
					3.5 2 3.5					
27.5		28.0 ft - 33.0 ft, Gray/brown ANDESITE, hard, very slight weathering, 0°, 45°, 80° joint sets, smooth, close, extensive quartz filling of joints/foliation.	2	90 (67)	2 2 2.75 2.5 5					
30.0										
32.5		Hole stopped @ 33.0 ft								
35.0										
37.5										
40.0										
42.5										
45.0										
47.5										

Notes:
1. Stratification lines represent approximate boundary between material types. Transition may be gradual.
2. N Values have not been corrected for hammer energy. CE is the hammer energy correction factor. CE is an estimated value.
3. Water level readings have been made at times and under conditions stated.
Fluctuations of groundwater may occur due to other factors than those present at the time measurements were made.
4. Ground surface elevations indicated on the boring logs were estimated based on the grading plan provided by VAOT.

Terracon

2010 COPY J1145115.GPJ VERMONT AOT.GDT 5/30/14

PROJECT NAME: HARTFORD
PROJECT NUMBER: IM 091-2(79)

FILE NAME: s12a132bor_new.dgn
PROJECT LEADER: K. HIGGINS
DESIGNED BY: W. LAMMER
BORING LOGS 3

PLOT DATE: 15-DEC-2014
DRAWN BY: W. LAMMER
CHECKED BY: J. SALVATORI
SHEET 75 OF 166

STATE OF VERMONT
AGENCY OF TRANSPORTATION
MATERIALS & RESEARCH SECTION
SUBSURFACE INFORMATION

BORING LOG

HARTFORD
IM 91-2(79)
I-91 BR-43

Boring No.: **B-204**
Page No.: 1 of 1
Pin No.: 12A132
Checked By: BLS

Boring Crew: JUDKINS, HOOK
Date Started: 5/13/14 Date Finished: 5/15/14
VTSPG NAD83: N 417621.84 ft E 1683300.91 ft
Station: 151+46.59 Offset: 36.82
Ground Elevation: 556.94 ft

	Casing	Sampler
Type:	WB	SS
I.D.:	4 in	1.5 in
Hammer Wt:	N.A.	140 lb.
Hammer Fall:	N.A.	30 in.
Hammer/Rod Type:	Auto/AWJ	
Rig:	CME 55 TRACK	C. = 1.46

Groundwater Observations

Date	Depth (ft)	Notes
05/14/14	4.9	While drilling.

Depth (ft)	Strata (1)	CLASSIFICATION OF MATERIALS (Description)	Run (Dip deg.)	Core Rec. % (RQD %)	Drill Rate minutes/ft	Blows/6" (N Value)	Moisture Content %	Gravel %	Sand %	Fines %
		A-1-a, SaGr with roots & grass, brn, Moist, Rec. = 0.6 ft, Lab Note: Broken Rock was within sample.					4.6	53.4	33.0	13.6
5		Field Note:, Roller coned and cleaned out casing. A-2-4, GrSa, brn, Moist, Rec. = 0.3 ft, Lab Note: Broken Rock was within sample.				12-20-16-17 (36)	15.8	27.5	54.0	18.5
10		Field Note:, Roller coned and cleaned out casing. A-4, SaGrSi, gry, Moist, Rec. = 0.8 ft, Lab Note: Broken Rock was within sample.				21-28-R@2.5" (R)	10.5	30.0	26.4	43.6
		11.8 ft - 14.0 ft, Dark-greenish-gray to medium-bluish-gray metamorphosed andesitic and basaltic Tuff, Moderately hard, Unweathered, Poor rock, NXDC, RMR = 36	1 (70)	68 (0)		Top of Bedrock @ 11.8 ft				
15		14.0 ft - 19.0 ft, Dark-greenish-gray to medium-bluish-gray metamorphosed andesitic and basaltic Tuff, Moderately hard, Unweathered, Fair rock, NXMDC, RMR = 49	2 (70)	88 (72)	7 8 8 12 13					
20		Hole stopped @ 19.0 ft								
25		Remarks: Hole collapsed at 5.0 ft.								
30										
35										

Notes:
1. Stratification lines represent approximate boundary between material types. Transition may be gradual.
2. N Values have not been corrected for hammer energy. C is the hammer energy correction factor.
3. Water level readings have been made at times and under conditions stated. Fluctuations may occur due to other factors than those present at the time measurements were made.

BORING LOG 2 HARTFORD IM 91-2(79).GPJ VERMONT AOT.GDT 5/30/14

PROJECT NAME: HARTFORD
PROJECT NUMBER: IM 091-2(79)

FILE NAME: s12a132bor_new.dgn
PROJECT LEADER: K. HIGGINS
DESIGNED BY: W. LAMMER
BORING LOGS 4

PLOT DATE: 15-DEC-2014
DRAWN BY: W. LAMMER
CHECKED BY: J. SALVATORI
SHEET 76 OF 166

STATE OF VERMONT
AGENCY OF TRANSPORTATION
MATERIALS & RESEARCH SECTION
SUBSURFACE INFORMATION

BORING LOG

Hartford, VT

I91 Bridge 43 N/S

Boring No.: B-206
Page No.: 1 of 2
Pin No.: s12a132
Checked By: ASP

Boring Crew: NTB/Mike Nadeau, MJR
Date Started: 3/25/14 Date Finished: 3/26/14
VTSPG NAD83: N 417516.45 ft E 1683358.85 ft
Station: 250+18.53 Offset: 37.94
Ground Elevation: 551.24 ft

	Casing	Sampler
Type:	Auger/WB	SS
I.D.:	4.5 in	2 in
Hammer Wt:	300 lb.	140 lb.
Hammer Fall:	N.A.	30 in.
Hammer/Rod Type:	Auto	
Rig:	CME 50	CE = 1.33

Groundwater Observations

Date	Depth (ft)	Notes
03/26/14	11.4	After casing removal

Depth (ft)	Strata (1)	CLASSIFICATION OF MATERIALS (Description)	Run (Dip deg.)	Core Rec. % (RQD %)	Drill Rate minutes/ft	Blows/6" (N Value)	Moisture Content %	Gravel %	Sand %	Fines %
		A-1-b, SaGrSi, Rec. = 1.17 ft, (FILL)				1-4-8-7 (12)	15.6	32.0	48.7	19.3
2.5										
5.0		A-2-4, SaGrSi, Rec. = 11.0 ft, (FILL)				8-8-6-8 (14)	10.4	28.7	46.6	24.7
7.5										
10.0		A-1-b, GrSaSi, Rec. = 0.5 ft				19-12-9-8 (21)		59.4	23.3	17.3
12.5										
15.0		A-1-b, GrSaSi, Rec. = 10.8 ft				10-12-27-50/2" (39)	11.6	39.8	39.6	20.6
17.5										
20.0										
22.5										

Notes:
1. Stratification lines represent approximate boundary between material types. Transition may be gradual.
2. N Values have not been corrected for hammer energy. CE is the hammer energy correction factor. CE is an estimated value.
3. Water level readings have been made at times and under conditions stated.
Fluctuations of groundwater may occur due to other factors than those present at the time measurements were made.
4. Ground surface elevations indicated on the boring logs were estimated based on the grading plan provided by VAOT.

Terracon

2010 COPY J114511S.GPJ VERMONT AOT.GDT 5/30/14

STATE OF VERMONT
AGENCY OF TRANSPORTATION
MATERIALS & RESEARCH SECTION
SUBSURFACE INFORMATION

BORING LOG

Hartford, VT

I91 Bridge 43 N/S

Boring No.: B-206
Page No.: 2 of 2
Pin No.: s12a132
Checked By: ASP

Boring Crew: NTB/Mike Nadeau, MJR
Date Started: 3/25/14 Date Finished: 3/26/14
VTSPG NAD83: N 417516.45 ft E 1683358.85 ft
Station: 250+18.53 Offset: 37.94
Ground Elevation: 551.24 ft

	Casing	Sampler
Type:	Auger/WB	SS
I.D.:	4.5 in	2 in
Hammer Wt:	300 lb.	140 lb.
Hammer Fall:	N.A.	30 in.
Hammer/Rod Type:	Auto	
Rig:	CME 50	CE = 1.33

Groundwater Observations

Date	Depth (ft)	Notes
03/26/14	11.4	After casing removal

Depth (ft)	Strata (1)	CLASSIFICATION OF MATERIALS (Description)	Run (Dip deg.)	Core Rec. % (RQD %)	Drill Rate minutes/ft	Blows/6" (N Value)	Moisture Content %	Gravel %	Sand %	Fines %
		A-4, SiSaGr					21.4	12.1	13.7	74.2
		Weathered bedrock								
27.5		26.5 ft - 28.5 ft, Gray-green ANDESITE, fresh, very hard, 45°, 75°, 20° joint sets, rough, open, moderately close, foliated.	1	83 (83)	3.75 4					
		Hole stopped @ 28.5 ft								
30.0										
32.5										
35.0										
37.5										
40.0										
42.5										
45.0										
47.5										

Notes:
1. Stratification lines represent approximate boundary between material types. Transition may be gradual.
2. N Values have not been corrected for hammer energy. CE is the hammer energy correction factor. CE is an estimated value.
3. Water level readings have been made at times and under conditions stated.
Fluctuations of groundwater may occur due to other factors than those present at the time measurements were made.
4. Ground surface elevations indicated on the boring logs were estimated based on the grading plan provided by VAOT.

Terracon

2010 COPY J114511S.GPJ VERMONT AOT.GDT 5/30/14

PROJECT NAME: HARTFORD
PROJECT NUMBER: IM 091-2(79)

FILE NAME: s12a132bor_new.dgn
PROJECT LEADER: K. HIGGINS
DESIGNED BY: W. LAMMER
BORING LOGS 5

PLOT DATE: 15-DEC-2014
DRAWN BY: W. LAMMER
CHECKED BY: J. SALVATORI
SHEET 77 OF 166

STATE OF VERMONT
AGENCY OF TRANSPORTATION
MATERIALS & RESEARCH SECTION
SUBSURFACE INFORMATION

BORING LOG

Hartford, VT

I91 Bridge 43 N/S

Boring No.: B-206A
Page No.: 1 of 2
Pin No.: s12a132
Checked By: ASP

Boring Crew: Drilex/Jason, MJR
Date Started: 3/31/14 Date Finished: 3/31/14
VTSPG NAD83: N 417516.45 ft E 1683355.85 ft
Station: 250+18.53 Offset: 34.94
Ground Elevation: 551.24 ft

	Casing	Sampler
Type:	Auger/WB	SS
I.D.:	4.5 in	2 in
Hammer Wt:	300 lb.	140 lb.
Hammer Fall:	N.A.	30 in.
Hammer/Rod Type:	Auto	
Rig:	CME 50	CE = 1.33

Groundwater Observations		
Date	Depth (ft)	Notes
03/26/14	11.4	See B-206

Depth (ft)	Strata (1)	CLASSIFICATION OF MATERIALS (Description)	Run (Dip deg.)	Core Rec. % (RQD %)	Drill Rate minutes/ft	Blows/6" (N Value)	Moisture Content %	Gravel %	Sand %	Fines %
		Augered to 22.5', 3 feet west of B-206, and began rock core at 22.5 feet.								
2.5										
5.0										
7.5										
10.0										
12.5										
15.0										
17.5										
20.0										
22.5		22.5 ft – 27.5 ft, Gray-green ANDESITE, very hard, with phenocrysts, no foliation/bedding, 45° and 25° joint sets, smooth, fresh, moderately close.	1	46 (17)						

Notes:
1. Stratification lines represent approximate boundary between material types. Transition may be gradual.
2. N Values have not been corrected for hammer energy. CE is the hammer energy correction factor. CE is an estimated value.
3. Water level readings have been made at times and under conditions stated.
Fluctuations of groundwater may occur due to other factors than those present at the time measurements were made.
4. Ground surface elevations indicated on the boring logs were estimated based on the grading plan provided by VAOT.

Terracon

2010 COPY J114511 5.GPJ VERMONT AOT.GDT 5/30/14

STATE OF VERMONT
AGENCY OF TRANSPORTATION
MATERIALS & RESEARCH SECTION
SUBSURFACE INFORMATION

BORING LOG

Hartford, VT

I91 Bridge 43 N/S

Boring No.: B-206A
Page No.: 2 of 2
Pin No.: s12a132
Checked By: ASP

Boring Crew: Drilex/Jason, MJR
Date Started: 3/31/14 Date Finished: 3/31/14
VTSPG NAD83: N 417516.45 ft E 1683355.85 ft
Station: 250+18.53 Offset: 34.94
Ground Elevation: 551.24 ft

	Casing	Sampler
Type:	Auger/WB	SS
I.D.:	4.5 in	2 in
Hammer Wt:	300 lb.	140 lb.
Hammer Fall:	N.A.	30 in.
Hammer/Rod Type:	Auto	
Rig:	CME 50	CE = 1.33

Groundwater Observations		
Date	Depth (ft)	Notes
03/26/14	11.4	See B-206

Depth (ft)	Strata (1)	CLASSIFICATION OF MATERIALS (Description)	Run (Dip deg.)	Core Rec. % (RQD %)	Drill Rate minutes/ft	Blows/6" (N Value)	Moisture Content %	Gravel %	Sand %	Fines %
27.5		27.5 ft – 29.5 ft, Similar as above.	2	25 (0)						
30.0		29.5 ft – 32.5 ft, Similar as above. Lots of stops and starts due to poor circulation return/stoppages.	3	77 (64)	2.25 2.5 1.5					
32.5		Hole stopped @ 32.5 ft								
35.0										
37.5										
40.0										
42.5										
45.0										
47.5										

Notes:
1. Stratification lines represent approximate boundary between material types. Transition may be gradual.
2. N Values have not been corrected for hammer energy. CE is the hammer energy correction factor. CE is an estimated value.
3. Water level readings have been made at times and under conditions stated.
Fluctuations of groundwater may occur due to other factors than those present at the time measurements were made.
4. Ground surface elevations indicated on the boring logs were estimated based on the grading plan provided by VAOT.

Terracon

2010 COPY J114511 5.GPJ VERMONT AOT.GDT 6/2/14

PROJECT NAME: HARTFORD
PROJECT NUMBER: IM 091-2(79)

FILE NAME: s12a132bor_new.dgn
PROJECT LEADER: K. HIGGINS
DESIGNED BY: W. LAMMER
BORING LOGS 6

PLOT DATE: 15-DEC-2014
DRAWN BY: W. LAMMER
CHECKED BY: J. SALVATORI
SHEET 78 OF 166

STATE OF VERMONT
AGENCY OF TRANSPORTATION
MATERIALS & RESEARCH SECTION
SUBSURFACE INFORMATION

BORING LOG

Hartford, VT

I91 Bridge 43 N/S

Boring No.: B-208
Page No.: 1 of 1
Pin No.: s12a132
Checked By: ASP

Boring Crew: Drilex/Jason, MJR
Date Started: 4/02/14 Date Finished: 4/03/14
VTSPG NAD83: N 417615.23 ft E 1683383.96 ft
Station: 251+21.16 Offset: 41.48
Ground Elevation: 546.61 ft

	Casing	Sampler
Type:	Auger/WB	SS
I.D.:	4.5 in	2 in
Hammer Wt:	300 lb.	140 lb.
Hammer Fall:	N.A.	30 in.
Hammer/Rod Type:	Auto	
Rig:	CME 50	CE = 1.33

Groundwater Observations		
Date	Depth (ft)	Notes
04/03/14	0.0	Due to water used during drilling

Depth (ft)	Strata (1)	CLASSIFICATION OF MATERIALS (Description)	Run (Dip deg.)	Core Rec. % (RQD %)	Drill Rate minutes/ft	Blows/6" (N Value)	Moisture Content %	Gravel %	Sand %	Fines %
		Spin 4" casing to 12", start coring at 14"								
2.5		1.0 ft – 5.0 ft, Gray-green ANDESITE, hard, fresh, joints moderately close, rough, some smooth surfaces; foliation near vertical .	1	91 (89)	2.75 2.5 2.5 2					
5.0 7.5		5.0 ft – 9.0 ft, Similar as above, very slight weathering, near vertical foliation, joint set at 45°, hard, close, smooth.	2	93 (85)	2.5 2.75 2.5 2.75					
		9.0 ft – 10.0 ft, Similar as above, 45° joint set.	3	100 (68)	3					
10.0 12.5		10.0 ft – 15.0 ft, Similar as above, severe vertical fracturing in upper 2 feet, moderately weathered, open to closed, vertical foliation with quartz filling.	4	100 (65)	2.3 3 3 3.3 5.2					
15.0 17.5		15.0 ft – 20.0 ft, Similar as above, hard, 45° joint set, open to closed, moderate to fresh weathering, vertical to near vertical foliation with quartz filling.	5	100 (66)	2.7 2.7 2.2 2.3 2.6					
20.0		Hole stopped @ 20.0 ft								
22.5										

Notes:
1. Stratification lines represent approximate boundary between material types. Transition may be gradual.
2. N Values have not been corrected for hammer energy. CE is the hammer energy correction factor. CE is an estimated value.
3. Water level readings have been made at times and under conditions stated. Fluctuations of groundwater may occur due to other factors than those present at the time measurements were made.
4. Ground surface elevations indicated on the boring logs were estimated based on the grading plan provided by VAOT.

Terracon

2010_COPY J114511S.GPJ VERMONT AOT.GDT 5/30/14

STATE OF VERMONT
AGENCY OF TRANSPORTATION
MATERIALS & RESEARCH SECTION
SUBSURFACE INFORMATION

BORING LOG

HARTFORD
IM 91-2(79)
I-91 BR-43

Boring No.: **B-209**
Page No.: 1 of 1
Pin No.: 12A132
Checked By: BLS

Boring Crew: DAIGNEAULT, NIETO, JUDKINS
Date Started: 5/07/14 Date Finished: 5/08/14
VTSPG NAD83: N 417447.61 ft E 1683272.04 ft
Station: 149+67.32 Offset: 41.40
Ground Elevation: 573.65 ft

	Casing	Sampler
Type:	WB	SS
I.D.:	4 in	1.5 in
Hammer Wt:	N.A.	140 lb.
Hammer Fall:	N.A.	30 in.
Hammer/Rod Type:	Auto/AWJ	
Rig:	CME 55 TRACK	C. = 1.46

Groundwater Observations		
Date	Depth (ft)	Notes
05/08/14	26.7	AM

Depth (ft)	Strata (1)	CLASSIFICATION OF MATERIALS (Description)	Run (Dip deg.)	Core Rec. % (RQD %)	Drill Rate minutes/ft	Blows/6" (N Value)	Moisture Content %	Gravel %	Sand %	Fines %
		A-1-b, GrSa, brn, Moist, Rec. = 1.1 ft				1-2-4-6 (6)	5.1	43.1	47.9	9.0
		Field Note:, Roller Coned ahead and cleaned out casing.								
5		A-1-b, GrSa, brn, Moist, Rec. = 0.7 ft, Lab Note: Broken Rock was within sample.				8-6-7-9 (13)	11.1	42.1	44.1	13.8
		Field Note:, Roller Coned ahead and cleaned out casing.								
10		Visual Description:, GrSa with some Broken Rock, brn, Moist, Rec. = 0.3 ft, Rock stuck in sampler. Insufficient sample for testing.				8-12-16-19 (28)	7.9			
15		A-2-4, Sa, Lt/brn, Moist, Rec. = 1.5 ft				13-14-17-15 (31)	11.9	2.2	80.7	17.1
		Field Note:, Roller Coned ahead and cleaned out casing.								
20		A-2-4, GrSiSa, brn, Moist, Rec. = 1.3 ft, Lab Note: Broken Rock was within sample.				13-13-15-16 (28)	13.2	24.1	47.8	28.1
		Field Note:, Roller Coned ahead and cleaned out casing.								
25		A-2-4, SiSa, brn, Moist, Rec. = 1.3 ft, Lab Note: Broken Rock was within sample.				8-9-15-14 (24)	13.6	19.2	51.1	29.7
		Field Note:, Roller Coned ahead and cleaned out casing.								
30		A-2-4, SiGrSa, brn, Moist, Rec. = 0.9 ft, Lab Note: Broken Rock was within sample.				24-22-22-14 (44)	12.4	37.1	39.5	23.4
35		35.0 ft - 40.0 ft, Dark-greenish-gray to medium-bluish-gray metamorphosed andesitic and basaltic Tuff, Moderately hard, Unweathered, Poor rock, NXMDC, Near vertical fracture from 36.25' to 39.2'. RMR = 36	1 (85)	84 (18)	6 7 6 5 6	Top of Bedrock @ 35.0 ft				
40		Hole stopped @ 40.0 ft								
45		Remarks: Hole collapsed at 27.1 ft.								

Notes:
1. Stratification lines represent approximate boundary between material types. Transition may be gradual.
2. N Values have not been corrected for hammer energy. C. is the hammer energy correction factor.
3. Water level readings have been made at times and under conditions stated. Fluctuations may occur due to other factors than those present at the time measurements were made.

BORING LOG 2 HARTFORD IM 91-2(79).GPJ VERMONT AOT.GDT 5/30/14

PROJECT NAME: HARTFORD
PROJECT NUMBER: IM 091-2(79)

FILE NAME: s12a132bor_new.dgn
PROJECT LEADER: K. HIGGINS
DESIGNED BY: W. LAMMER
BORING LOGS 7

PLOT DATE: 15-DEC-2014
DRAWN BY: W. LAMMER
CHECKED BY: J. SALVATORI
SHEET 79 OF 166

STATE OF VERMONT
AGENCY OF TRANSPORTATION
MATERIALS & RESEARCH SECTION
SUBSURFACE INFORMATION

BORING LOG

HARTFORD
IM 91-2(79)
I-91 BR-43

Boring No.: **B-210**
Page No.: 1 of 1
Pin No.: 12A132
Checked By: BLS

Boring Crew: DAIGNEAULT, NIETO, JUDKINS
Date Started: 5/08/14 Date Finished: 5/12/14
VTSPG NAD83: N 417672.63 ft E 1683317.78 ft
Station: 152+00.73 Offset: 41.39
Ground Elevation: 572.42 ft

	Casing	Sampler
Type:	WB	SS
I.D.:	4 in	1.5 in
Hammer Wt:	N.A.	140 lb.
Hammer Fall:	N.A.	30 in.
Hammer/Rod Type:	Auto/AWJ	
Rig:	CME 55 TRACK	C. = 1.46

Groundwater Observations

Date	Depth (ft)	Notes
05/09/14	19.7	AM
05/12/14	19.3	While drilling.

Depth (ft)	Strata (1)	CLASSIFICATION OF MATERIALS (Description)	Run (Dip deg.)	Core Rec. % (RQD %)	Drill Rate minutes/ft	Blows/6" (N Value)	Moisture Content %	Gravel %	Sand %	Fines %
		A-1-b, SaGr, brn, Moist, Rec. = 1.1 ft, Lab Note: Wood & Roots were within sample.				3-2-4-4 (6)	5.3	47.9	44.4	7.7
		Field Note:, NXDC, Cobbles								
5		Field Note:, No Recovery				R@0.0" (R)				
		Field Note:, NXDC, Boulder								
10		A-2-4, GrSiSa, gry, Moist, Rec. = 0.9 ft				5-4-3-4 (7)	14.5	22.3	44.5	33.2
15		Field Note:, NXDC								
		A-2-4, SiSa, gry, Moist, Rec. = 1.2 ft				10-13-11-15 (24)	12.7	17.8	48.1	34.1
20		Field Note:, Roller Coned ahead and cleaned out casing.								
		A-2-4, GrSiSa, gry, Moist, Rec. = 1.1 ft				10-9-10-10 (19)	12.1	21.8	51.5	26.7
25		Field Note:, Roller Coned ahead and cleaned out casing.								
		A-4, SaGrSi, gry, Moist, Rec. = 0.5 ft, Lab Note: Broken Rock was within sample.				R@6.0" (R)	10.3	32.0	29.4	38.6
30		Field Note:, Roller Coned ahead and cleaned out casing.								
		Field Note:, No Recovery				R@0.0" (R)				
		Field Note:, Mostly Broken Rock with a small layer of Weathered Rock								
35		32.6 ft - 36.6 ft, Dark-greenish-gray to medium-bluish-gray metamorphosed andesitic and basaltic Tuff, Moderately hard to soft, Unweathered, Poor rock, NXMDC, RMR = 41	1 (75)	100 (28)	2 3 7 13	Top of Bedrock @ 32.6 ft				
40		36.6 ft - 41.6 ft, Dark-greenish-gray to medium-bluish-gray metamorphosed andesitic and basaltic Tuff, Moderately hard to soft, Unweathered, Poor rock, NXMDC, RMR = 36	2 (75)	42 (0)	3 26 16 9 3					
		Hole stopped @ 41.6 ft								
45		Remarks: Hole collapsed at 7.7 ft.								

Notes:
1. Stratification lines represent approximate boundary between material types. Transition may be gradual.
2. N Values have not been corrected for hammer energy. C is the hammer energy correction factor.
3. Water level readings have been made at times and under conditions stated. Fluctuations may occur due to other factors than those present at the time measurements were made.

BORING LOG 2 HARTFORD IM 91-2(79).GPJ VERMONT AOT.GDT 5/30/14

STATE OF VERMONT
AGENCY OF TRANSPORTATION
MATERIALS & RESEARCH SECTION
SUBSURFACE INFORMATION

BORING LOG

HARTFORD
IM 91-2(79)
I-91 BR-43

Boring No.: **B-211**
Page No.: 1 of 1
Pin No.: 12A132
Checked By: BLS

Boring Crew: DAIGNEAULT, NIETO, HOOK
Date Started: 5/05/14 Date Finished: 5/05/14
VTSPG NAD83: N 417452.80 ft E 1683180.69 ft
Station: 149+58.45 Offset: -49.66
Ground Elevation: 567.04 ft

	Casing	Sampler
Type:	WB	SS
I.D.:	4 in	1.5 in
Hammer Wt:	N.A.	140 lb.
Hammer Fall:	N.A.	30 in.
Hammer/Rod Type:	Auto/AWJ	
Rig:	CME 55 TRACK	C. = 1.46

Groundwater Observations

Date	Depth (ft)	Notes
05/05/14	8.1	While drilling.

Depth (ft)	Strata (1)	CLASSIFICATION OF MATERIALS (Description)	Run (Dip deg.)	Core Rec. % (RQD %)	Drill Rate minutes/ft	Blows/6" (N Value)	Moisture Content %	Gravel %	Sand %	Fines %
		A-2-4, SiSa, brn, Moist, Rec. = 0.7 ft, Lab Note: Grass & Roots were within sample.				1-1-1-1 (2)	18.0	15.5	53.9	30.6
5		A-2-4, SiSa, brn, Moist, Rec. = 1.0 ft, Lab Note: Roots were within sample. Roller Coned, Cleaned out casing.				1-1-6-10 (7)	20.1	7.8	70.4	21.8
10		A-2-4, SiSa, brn, Moist, Rec. = 1.1 ft, Lab Note: Broken Rock was within sample.				10-9-9-14 (18)	14.5	15.4	58.8	25.8
15		Field Note:, Roller Coned ahead and cleaned out casing.								
		A-4, SiSa, brn, Moist, Rec. = 0.7 ft, Lab Note: Broken Rock was within sample.				5-12-R@6.0" (R)	13.8	18.1	41.1	40.8
		SaGr, blu-grn, Dry, Rec. = 0.2 ft, 16.3 ft - 16.5 ft, Lab Note: Mostly Broken Rock with sandy silt.					3.8	52.2	32.2	15.6
		Field Note:, Roller Coned ahead and cleaned out casing.								
20		A-4, GrSaSi, gry, MTW, Rec. = 0.9 ft, Lab Note: Broken Rock was within sample.				25-42-R@3.5" (R)	11.3	25.3	26.8	47.9
		Field Note:, Roller Coned ahead and cleaned out casing.								
25		A-4, GrSaSi, gry, MTW, Rec. = 1.2 ft, Lab Note: Broken Rock was within sample.				17-36-31-R@3.5" (67)	12.9	20.5	35.2	44.3
		Field Note:, Roller Coned ahead and cleaned out casing.								
30		A-4, SaSi, gry, Moist, Rec. = 1.3 ft, Lab Note: Broken Rock was within sample.				26-44-R@3.5" (R)	11.5	18.3	32.5	49.2
		Field Note:, Roller Coned ahead and cleaned out casing.								
35		A-4, SaSi, gry, Moist, Rec. = 0.8 ft, Lab Note: Broken Rock was within sample.				30-R@6.0" (R)	12.4	16.1	36.9	47.0
		Field Note:, Roller Coned, Weathered Rock								
40		40.0 ft - 45.0 ft, Dark-greenish-gray to medium-bluish-gray metamorphosed andesitic and basaltic Tuff, Moderately hard, Unweathered, Poor rock, NXMDC, Vertical fractures in upper core run. RMR = 36	1 (85)	90 (7)	6 7 7 13 15	Top of Bedrock @ 40.0 ft				
		Hole stopped @ 45.0 ft								
45		Remarks: Hole collapsed at 38.2 ft.								

Notes:
1. Stratification lines represent approximate boundary between material types. Transition may be gradual.
2. N Values have not been corrected for hammer energy. C is the hammer energy correction factor.
3. Water level readings have been made at times and under conditions stated. Fluctuations may occur due to other factors than those present at the time measurements were made.

BORING LOG 2 HARTFORD IM 91-2(79).GPJ VERMONT AOT.GDT 5/30/14

PROJECT NAME: HARTFORD
PROJECT NUMBER: IM 091-2(79)

FILE NAME: s12a132bor_new.dgn
PROJECT LEADER: K. HIGGINS
DESIGNED BY: W. LAMMER
BORING LOGS 8

PLOT DATE: 15-DEC-2014
DRAWN BY: W. LAMMER
CHECKED BY: J. SALVATORI
SHEET 80 OF 166

STATE OF VERMONT
AGENCY OF TRANSPORTATION
MATERIALS & RESEARCH SECTION
SUBSURFACE INFORMATION

BORING LOG

HARTFORD
IM 91-2(79)
I-91 BR-43

Boring No.: **B-212**
Page No.: 1 of 1
Pin No.: 12A132
Checked By: BLS

Boring Crew: DAIGNEAULT, NIETO, HOOK
Date Started: 4/30/14 Date Finished: 5/02/14
VTSPG NAD83: N 417630.22 ft E 1683206.05 ft
Station: 151+33.92 Offset: -57.55
Ground Elevation: 564.13 ft

	Casing	Sampler
Type:	WB	SS
I.D.:	4 in	1.5 in
Hammer Wt:	N.A.	140 lb.
Hammer Fall:	N.A.	30 in.
Hammer/Rod Type:	Auto/AWJ	
Rig:	CME 55 TRACK	C. = 1.46

Groundwater Observations

Date	Depth (ft)	Notes
05/02/14	12.7	AM
05/02/14	1.6	Casing removed.

Depth (ft)	Strata (1)	CLASSIFICATION OF MATERIALS (Description)	Run (Dip deg.)	Core Rec. % (RQD %)	Drill Rate minutes/ft	Blows/6" (N Value)	Moisture Content %	Gravel %	Sand %	Fines %
		A-4, SiSa, brn, Moist, Rec. = 1.1 ft, Lab Note: Grass & Roots were within sample.				1-2-3-4 (5)	16.1	12.1	49.3	38.6
		A-4, SiSa, brn, Moist, Rec. = 1.4 ft					10.8	13.9	48.6	37.5
5		A-4, SiSa, brn, Moist, Rec. = 1.3 ft				8-10-16-19 (26)	9.8	15.6	43.1	41.3
		A-2-4, SiSa, brn, Moist, Rec. = 1.7 ft				15-20-15-17 (35)	8.6	16.3	53.7	30.0
		A-2-4, SiGrSa, gry, Moist, Rec. = 1.2 ft, NXDC, Cleaned out casing.				11-14-45-17 (59)	11.0	26.0	49.2	24.8
10		A-2-4, SiGrSa, gry, Moist, Rec. = 1.2 ft, NXDC, Cleaned out casing. Lab Note: Broken Rock was within sample.				13-11-13-14 (24)	11.5	24.0	55.7	20.3
		A-2-4, SiGrSa, gry, Moist, Rec. = 0.8 ft, Lab Note: Broken Rock was within sample.				23-16-11-16 (27)	11.7	32.2	47.2	20.6
15		A-1-b, SaGr, gry, Moist, Rec. = 1.1 ft, NXDC, Cleaned out casing. Lab Note: Broken Rock was within sample.				20-16-15-16 (31)	10.9	43.0	39.5	17.5
		A-2-4, GrSa, gry, Moist, Rec. = 1.2 ft, Lab Note: Broken Rock was within sample.				13-13-14-15 (27)	11.8	29.0	53.1	17.9
		A-1-b, SaGr, gry, Moist, Rec. = 1.1 ft, Lab Note: Broken Rock was within sample.				22-26-28-22 (54)	10.6	51.4	32.0	16.6
20		A-4, SiSa, gry, Moist, Rec. = 1.5 ft, Lab Note: Broken Rock was within sample.				12-12-16-13 (28)	15.6	17.0	45.9	37.1
		A-2-4, SaGrSi, gry, Moist, Rec. = 1.0 ft, Lab Note: Broken Rock was within sample.				18-39-33-R@1.0" (72)	10.3	33.9	31.0	35.1
		A-4, SaSi, gry, Moist, Rec. = 0.3 ft				R@3.5" (R)	11.7	8.7	44.0	47.3
25		Field Note:, Cobbles								
		Field Note:, Weathered Rock								
30		27.4 ft - 32.4 ft, Dark-greenish-gray to medium-bluish-gray metamorphosed andesitic and basaltic Tuff, Moderately hard, Unweathered, Poor rock, NXMDC, Near vertical fracture from 29.4' to 32.4'. RMR = 36	1 (85)	86 (10)	2 3 4 3 4	Top of Bedrock @ 27.4 ft				
		Hole stopped @ 32.4 ft								
35		Remarks: Hole collapsed at 16.3 ft.								

Notes:
1. Stratification lines represent approximate boundary between material types. Transition may be gradual.
2. N Values have not been corrected for hammer energy. C is the hammer energy correction factor.
3. Water level readings have been made at times and under conditions stated. Fluctuations may occur due to other factors than those present at the time measurements were made.

BORING LOG 2 HARTFORD IM 91-2(79).GPJ VERMONT AOT.GDT 5/30/14

STATE OF VERMONT
AGENCY OF TRANSPORTATION
MATERIALS & RESEARCH SECTION
SUBSURFACE INFORMATION

BORING LOG

HARTFORD
IM 91-2(79)
I-91 BR-43

Boring No.: **B-214**
Page No.: 1 of 1
Pin No.: 12A132
Checked By: BLS

Boring Crew: JUDKINS, HOOK
Date Started: 5/12/14 Date Finished: 5/13/14
VTSPG NAD83: N 417666.95 ft E 1683415.96 ft
Station: 251+81.01 Offset: 60.34
Ground Elevation: 560.87 ft

	Casing	Sampler
Type:	WB	SS
I.D.:	4 in	1.5 in
Hammer Wt:	N.A.	140 lb.
Hammer Fall:	N.A.	30 in.
Hammer/Rod Type:	Auto/AWJ	
Rig:	CME 55 TRACK	C. = 1.46

Groundwater Observations

Date	Depth (ft)	Notes
		No water to depth.

Depth (ft)	Strata (1)	CLASSIFICATION OF MATERIALS (Description)	Run (Dip deg.)	Core Rec. % (RQD %)	Drill Rate minutes/ft	Blows/6" (N Value)	Moisture Content %	Gravel %	Sand %	Fines %
		A-2-4, SiGrSa, brn, Moist, Rec. = 0.7 ft, Lab Note: Wood, roots, grass were within sample.				1-4-10-9 (14)	24.2	24.8	53.9	21.3
		Field Note:, Cobbles & Boulders								
5		Field Note:, No Recovery				R@1.0" (R)				
		Field Note:, Lost water return at 6.0 feet								
		Field Note:, NXDC, Cleaned out casing								
10		Lab Note, Mostly Broken Rock with sandy silt, grn, Moist, Rec. = 0.5 ft				26-24-17-13 (41)	7.5	65.7	20.7	13.6
		Field Note:, NXDC, Cobbles								
15		15.0 ft - 16.0 ft, Dark-greenish-gray to medium-bluish-gray metamorphosed andesitic and basaltic Tuff, with plagioclase phenocrysts. Moderately hard, Unweathered, Poor rock, NXDC, RMR = 39	1 (?) 2 (?)	70 (0) 98 (58)	3 5 4 4	Top of Bedrock @ 15.0 ft				
20		16.0 ft - 21.0 ft, Dark-greenish-gray to medium-bluish-gray metamorphosed andesitic and basaltic Tuff, with plagioclase phenocrysts. Moderately hard, Unweathered, Fair rock, NXMDC, RMR = 49			5 5					
		Hole stopped @ 21.0 ft								
25		Remarks: Hole collapsed at 10.3 ft.								
30										
35										
40										
45										

Notes:
1. Stratification lines represent approximate boundary between material types. Transition may be gradual.
2. N Values have not been corrected for hammer energy. C is the hammer energy correction factor.
3. Water level readings have been made at times and under conditions stated. Fluctuations may occur due to other factors than those present at the time measurements were made.

BORING LOG 2 HARTFORD IM 91-2(79).GPJ VERMONT AOT.GDT 5/30/14

PROJECT NAME: HARTFORD
PROJECT NUMBER: IM 091-2(79)

FILE NAME: s12a132bor_new.dgn
PROJECT LEADER: K. HIGGINS
DESIGNED BY: W. LAMMER
BORING LOGS 9

PLOT DATE: 15-DEC-2014
DRAWN BY: W. LAMMER
CHECKED BY: J. SALVATORI
SHEET 81 OF 166

STATE OF VERMONT
AGENCY OF TRANSPORTATION
MATERIALS & RESEARCH SECTION
SUBSURFACE INFORMATION

BORING LOG

Hartford, VT

I91 Bridge 43 N/S

Boring No.: B-215
Page No.: 1 of 1
Pin No.: s12a132
Checked By: ASP

Boring Crew: Drilex/Jason, MJR
Date Started: 4/03/14 Date Finished: 4/03/14
VTSPG NAD83: N 417493.25 ft E 1683150.25 ft
Station: 149+92.68 Offset: -86.12
Ground Elevation: 552.71 ft

	Casing	Sampler
Type:	Auger/WB	SS
I.D.:	4.5 in	2 in
Hammer Wt:	300 lb.	140 lb.
Hammer Fall:	N.A.	30 in.
Hammer/Rod Type:	Auto	
Rig:	CME 50	CE = 1.33

Groundwater Observations

Date	Depth (ft)	Notes
04/03/14	0.0	Due to water used during drilling

Depth (ft)	Strata (1)	CLASSIFICATION OF MATERIALS (Description)	Run (Dip deg.)	Core Rec. % (RQD %)	Drill Rate minutes/ft	Blows/6" (N Value)	Moisture Content %	Gravel %	Sand %	Fines %
		A-1-b, SaGrSi, Rec. = 1.0 ft, (FILL)				4-3-2-2 (5)	20.4	31.6	46.0	22.4
2.5		A-2-4, SaSiGr, (FILL)				5-7-10-10 (17)	13.5	22.8	45.6	31.6
5.0		A-4, SiSaGr, Rec. = 1.17 ft				12-27-39-25/1" (66)	11.2	20.2	33.9	45.9
7.5		A-4, SiSaGr, Rec. = 15.0 ft				19-27-42-30/2" (69)	11.4	12.5	37.4	50.1
10.0		Weathered bedrock								
12.5		12.0 ft – 17.0 ft, Grey-green ANDESITE, hard, 5° to 70° and 45° joint sets, smooth, fresh. Bottom 8" 45° fractures, mod. weathered, open-clay-silt filled at very bottom of last 45° joint. Foliation nearly vertical, mod. close, tight.	1	100 (85)	1.3 2.3 2.5 3 1.6					
15.0										
17.5		Hole stopped @ 17.0 ft								
20.0										
22.5										

Notes:
1. Stratification lines represent approximate boundary between material types. Transition may be gradual.
2. N Values have not been corrected for hammer energy. CE is the hammer energy correction factor. CE is an estimated value.
3. Water level readings have been made at times and under conditions stated.
Fluctuations of groundwater may occur due to other factors than those present at the time measurements were made.
4. Ground surface elevations indicated on the boring logs were estimated based on the grading plan provided by VAOT.

Terracon

2010 COPY J1145115.GPJ VERMONT AOT.GDT 5/30/14

STATE OF VERMONT
AGENCY OF TRANSPORTATION
MATERIALS & RESEARCH SECTION
SUBSURFACE INFORMATION

BORING LOG

Hartford, VT

I91 Bridge 43 N/S

Boring No.: B-216
Page No.: 1 of 1
Pin No.: s12a132
Checked By: ASP

Boring Crew: Drilex/Jason, MJR
Date Started: 4/03/14 Date Finished: 4/03/14
VTSPG NAD83: N 417592.86 ft E 1683174.45 ft
Station: 150+91.87 Offset: 80.60
Ground Elevation: 549.35 ft

	Casing	Sampler
Type:	Auger/WB	SS
I.D.:	4.5 in	2 in
Hammer Wt:	300 lb.	140 lb.
Hammer Fall:	N.A.	30 in.
Hammer/Rod Type:	Auto	
Rig:	CME 50	CE = 1.33

Groundwater Observations

Date	Depth (ft)	Notes
04/03/14	0.0	Due to water used during drilling

Depth (ft)	Strata (1)	CLASSIFICATION OF MATERIALS (Description)	Run (Dip deg.)	Core Rec. % (RQD %)	Drill Rate minutes/ft	Blows/6" (N Value)	Moisture Content %	Gravel %	Sand %	Fines %
2.5										
5.0		A-4, SaSiGr, Rec. = 0.83 ft				9-11-14-14 (25)	12.3	25.0	39.1	35.9
7.5		Weathered bedrock								
10.0										
12.5		11.0 ft – 16.0 ft, Gray-green ANDESITE, hard, 0° and 80° joint sets, slightly weathered, smooth, moderately close, slighty open joints in 9" piece near bottom, smooth; thin foliation.	1	90 (85)	2.5 2.3 2.5 2.3 2.8					
15.0										
17.5		Hole stopped @ 16.0 ft								
20.0										
22.5										

Notes:
1. Stratification lines represent approximate boundary between material types. Transition may be gradual.
2. N Values have not been corrected for hammer energy. CE is the hammer energy correction factor. CE is an estimated value.
3. Water level readings have been made at times and under conditions stated.
Fluctuations of groundwater may occur due to other factors than those present at the time measurements were made.
4. Ground surface elevations indicated on the boring logs were estimated based on the grading plan provided by VAOT.

Terracon

2010 COPY J1145115.GPJ VERMONT AOT.GDT 5/30/14

PROJECT NAME: HARTFORD
PROJECT NUMBER: IM 091-2(79)

FILE NAME: s12a132bor_new.dgn
PROJECT LEADER: K. HIGGINS
DESIGNED BY: W. LAMMER
BORING LOGS 10

PLOT DATE: 15-DEC-2014
DRAWN BY: W. LAMMER
CHECKED BY: J. SALVATORI
SHEET 82 OF 166

STATE OF VERMONT
AGENCY OF TRANSPORTATION
MATERIALS & RESEARCH SECTION
SUBSURFACE INFORMATION

BORING LOG

Hartford, VT

I91 Bridge 43 N/S

Boring No.: B-217
Page No.: 1 of 2
Pin No.: s12a132
Checked By: ASP

Boring Crew: NTB/Mike Nadeau, MJR
Date Started: 3/25/14 Date Finished: 3/25/14
VTSPG NAD83: N 417515.93 ft E 1683416.13 ft
Station: 250+29.29 Offset: 94.25
Ground Elevation: 555.78 ft

	Casing	Sampler
Type:	Auger/WB	SS
I.D.:	4.5 in	2 in
Hammer Wt:	300 lb.	140 lb.
Hammer Fall:	N.A.	30 in.
Hammer/Rod Type:	Auto	
Rig:	CME 50	CE = 1.33

Groundwater Observations

Date	Depth (ft)	Notes
03/25/14	10.2	After drilling

Depth (ft)	Strata (1)	CLASSIFICATION OF MATERIALS (Description)	Run (Dip deg.)	Core Rec. % (RQD %)	Blows/6" (N Value)	Moisture Content %	Gravel %	Sand %	Fines %
2.5		A-2-4, SaSiGr, Rec. = 1.17 ft, (FILL)			3-7-7-7 (14)	16.8	23.4	47.4	29.2
5.0		A-2-4, SaSiGr, Rec. = 1.83 ft, (FILL)			9-17-17-12 (34)	14.6	17.8	51.3	30.9
		A-1-b, GrSaSi, (FILL)				7.4	48.0	29.5	22.5
7.5									
10.0		A-2-4, SaSiGr, Rec. = 1.92 ft			15-14-16-8 (30)	10.8	26.8	41.6	31.6
12.5									
15.0		A-2-4, GrSaSi, Rec. = 1.08 ft			9-15-18-19 (33)	10.7	37.0	34.5	28.5
17.5									
20.0									
22.5									

Notes:
1. Stratification lines represent approximate boundary between material types. Transition may be gradual.
2. N Values have not been corrected for hammer energy. CE is the hammer energy correction factor. CE is an estimated value.
3. Water level readings have been made at times and under conditions stated.
Fluctuations of groundwater may occur due to other factors than those present at the time measurements were made.
4. Ground surface elevations indicated on the boring logs were estimated based on the grading plan provided by VAOT.

Terracon

2010 COPY J1145115.GPJ VERMONT AOT.GDT 5/30/14

STATE OF VERMONT
AGENCY OF TRANSPORTATION
MATERIALS & RESEARCH SECTION
SUBSURFACE INFORMATION

BORING LOG

Hartford, VT

I91 Bridge 43 N/S

Boring No.: B-217
Page No.: 2 of 2
Pin No.: s12a132
Checked By: ASP

Boring Crew: NTB/Mike Nadeau, MJR
Date Started: 3/25/14 Date Finished: 3/25/14
VTSPG NAD83: N 417515.93 ft E 1683416.13 ft
Station: 250+29.29 Offset: 94.25
Ground Elevation: 555.78 ft

	Casing	Sampler
Type:	Auger/WB	SS
I.D.:	4.5 in	2 in
Hammer Wt:	300 lb.	140 lb.
Hammer Fall:	N.A.	30 in.
Hammer/Rod Type:	Auto	
Rig:	CME 50	CE = 1.33

Groundwater Observations

Date	Depth (ft)	Notes
03/25/14	10.2	After drilling

Depth (ft)	Strata (1)	CLASSIFICATION OF MATERIALS (Description)	Run (Dip deg.)	Core Rec. % (RQD %)	Blows/6" (N Value)	Moisture Content %	Gravel %	Sand %	Fines %
		Rec. = 0.17 ft, 25.0 ft – 27.0 ft			9-11-12-14 (23)				
27.5		Weathered bedrock							
30.0		30.0 ft – 33.0 ft, Gray-green ANDESITE, hard, 70° and 45° joint sets, closely spaced, slight to severe weathering, with quartz boudins.	1	58 (12.5)					
32.5		33.0 ft – 34.5 ft, Green-gray ANDESITE, hard, 45° to 0°, 90° joint sets, closely spaced, rough to smooth, moderately weathered.	2	66 (44)					
35.0		34.5 ft – 36.0 ft, Similar as above, vertical fracture in last 8" piece, very slight weathering.	3	100 (69)					
		Hole stopped @ 36.0 ft							
37.5									
40.0									
42.5									
45.0									
47.5									

Notes:
1. Stratification lines represent approximate boundary between material types. Transition may be gradual.
2. N Values have not been corrected for hammer energy. CE is the hammer energy correction factor. CE is an estimated value.
3. Water level readings have been made at times and under conditions stated.
Fluctuations of groundwater may occur due to other factors than those present at the time measurements were made.
4. Ground surface elevations indicated on the boring logs were estimated based on the grading plan provided by VAOT.

Terracon

2010 COPY J1145115.GPJ VERMONT AOT.GDT 5/30/14

PROJECT NAME: HARTFORD
PROJECT NUMBER: IM 091-2(79)

FILE NAME: s12a132bor_new.dgn
PROJECT LEADER: K. HIGGINS
DESIGNED BY: W. LAMMER
BORING LOGS II

PLOT DATE: 15-DEC-2014
DRAWN BY: W. LAMMER
CHECKED BY: J. SALVATORI
SHEET 83 OF 166

STATE OF VERMONT
AGENCY OF TRANSPORTATION
MATERIALS & RESEARCH SECTION
SUBSURFACE INFORMATION

BORING LOG

Hartford, VT

I91 Bridge 43 N/S

Boring No.: B-218
Page No.: 1 of 1
Pin No.: s12a132
Checked By: ASP

Boring Crew: Drilex/Jason, MJR
Date Started: 4/03/14 Date Finished: 4/03/14
VTSPG NAD83: N 417651.73 ft E 1683448.99 ft
Station: 251+74.37 Offset: 96.21
Ground Elevation: 547.65 ft

	Casing	Sampler
Type:	Auger/WB	SS
I.D.:	4.5 in	2 in
Hammer Wt:	300 lb.	140 lb.
Hammer Fall:	N.A.	30 in.
Hammer/Rod Type:	Auto	
Rig:	CME 50	CE = 1.33

Groundwater Observations

Date	Depth (ft)	Notes
04/02/14	0.0	Due to water used during drilling

Depth (ft)	Strata (1)	CLASSIFICATION OF MATERIALS (Description)	Run (Dip deg.)	Core Rec., % (RQD %)	Drill Rate minutes/ft	Blows/6" (N Value)	Moisture Content %	Gravel %	Sand %	Fines %
		Spin 4" casing to 12", start coring at 12"								
2.5		1.0 ft – 5.0 ft, Gray-green ANDESITE, hard, 75° and 10° joint sets, fresh weathering, moderately close. Minor 75° foliation with quartz filling, thin, rough, slightly open to tight.	1	92 (92)	2.3 2.2 2 2.75					
5.0		5.0 ft – 6.0 ft, Similar as above.	2	100 (50)	2					
		Hole stopped @ 6.0 ft								
7.5										
10.0										
12.5										
15.0										
17.5										
20.0										
22.5										

Notes:
1. Stratification lines represent approximate boundary between material types. Transition may be gradual.
2. N Values have not been corrected for hammer energy. CE is the hammer energy correction factor. CE is an estimated value.
3. Water level readings have been made at times and under conditions stated.
Fluctuations of groundwater may occur due to other factors than those present at the time measurements were made.
4. Ground surface elevations indicated on the boring logs were estimated based on the grading plan provided by VAOT.

Terracon

2010 COPY J1145115.GPJ VERMONT AOT.GDT 5/30/14

PROJECT NAME: HARTFORD
PROJECT NUMBER: IM 091-2(79)

FILE NAME: s12a132bor_new.dgn
PROJECT LEADER: K. HIGGINS
DESIGNED BY: W. LAMMER
BORING LOGS 8

PLOT DATE: 15-DEC-2014
DRAWN BY: W. LAMMER
CHECKED BY: J. SALVATORI
SHEET 84 OF 166

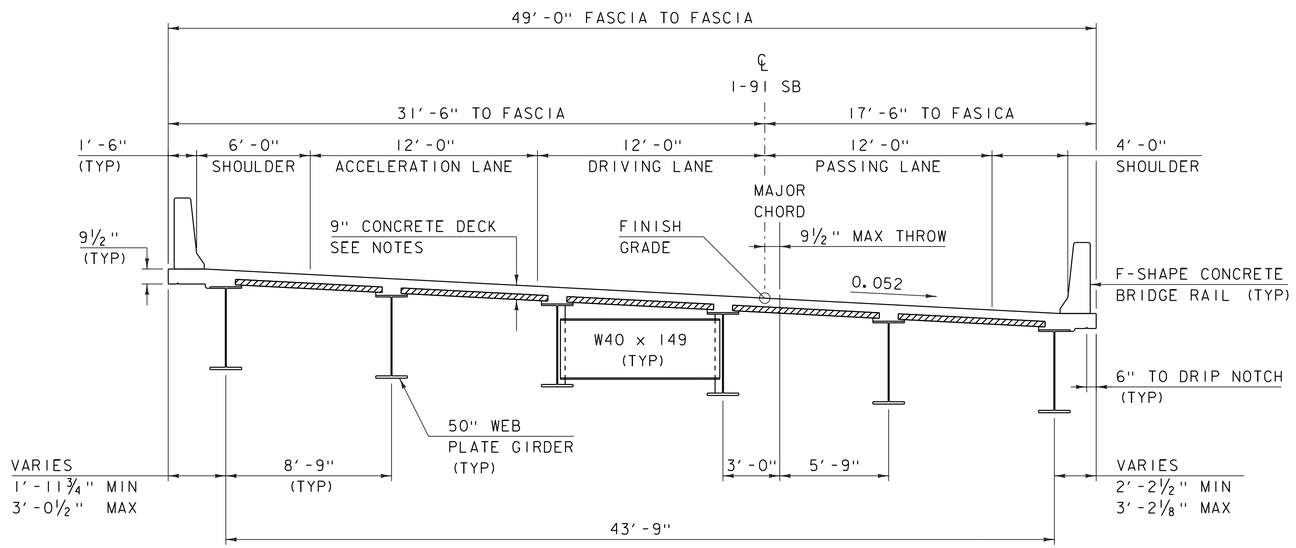

BRIDGE 43S TYPICAL SECTION

SCALE: ¼" = 1'-0"

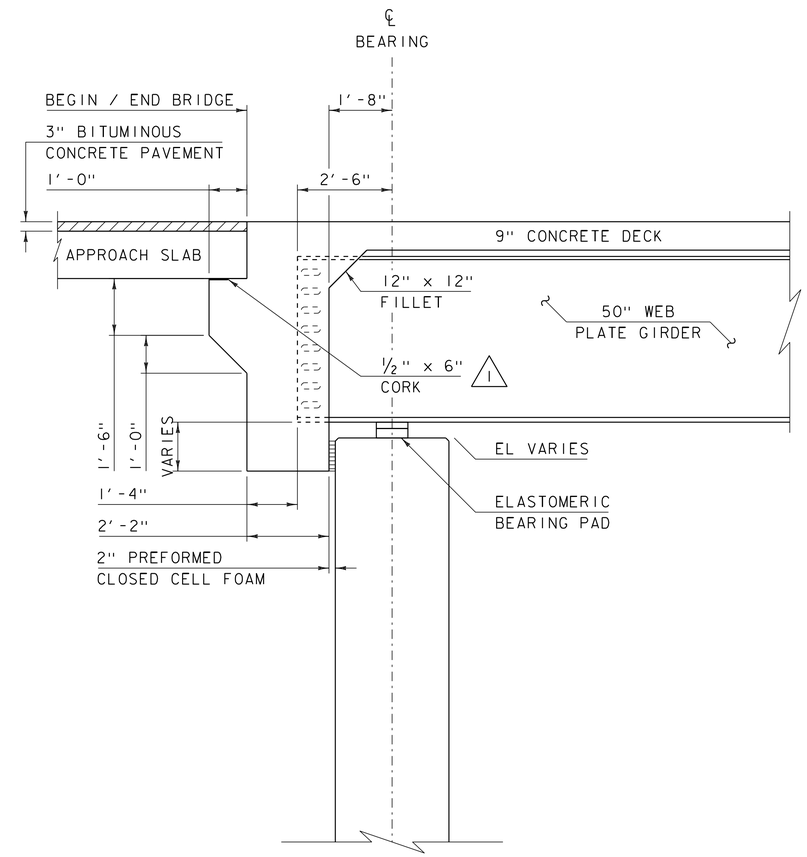

BRIDGE 43S END DETAIL

SCALE ½"=1'-0"

REVISION	DATE	DESCRIPTION	BY
1	01-06-2015	CORK DIMENSION	RK

PROJECT NAME: HARTFORD
PROJECT NUMBER: IM 091-2(79)

FILE NAME: s12a132bridge_end_detail.dgn
PROJECT LEADER: K. HIGGINS
DESIGNED BY: R. KLINEFELTER
SUPERSTRUCTURE TYPICALS 43S

PLOT DATE: 06-JAN-2015
DRAWN BY: K. FRIEDLAND
CHECKED BY: J. SALVATORI
SHEET 85 OF 166

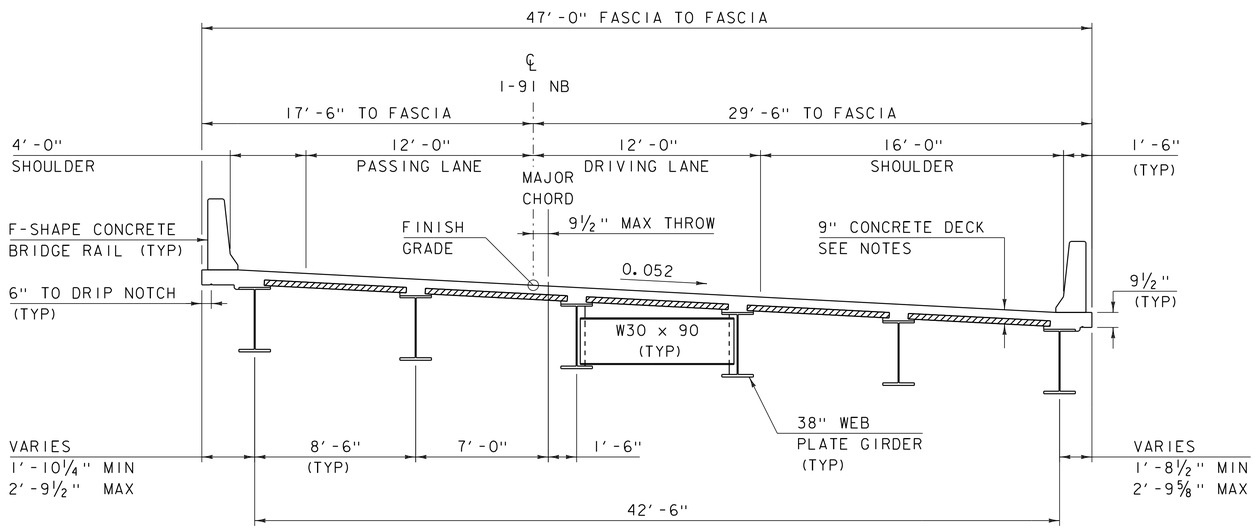

BRIDGE 43N TYPICAL SECTION

SCALE: ¼" = 1'-0"

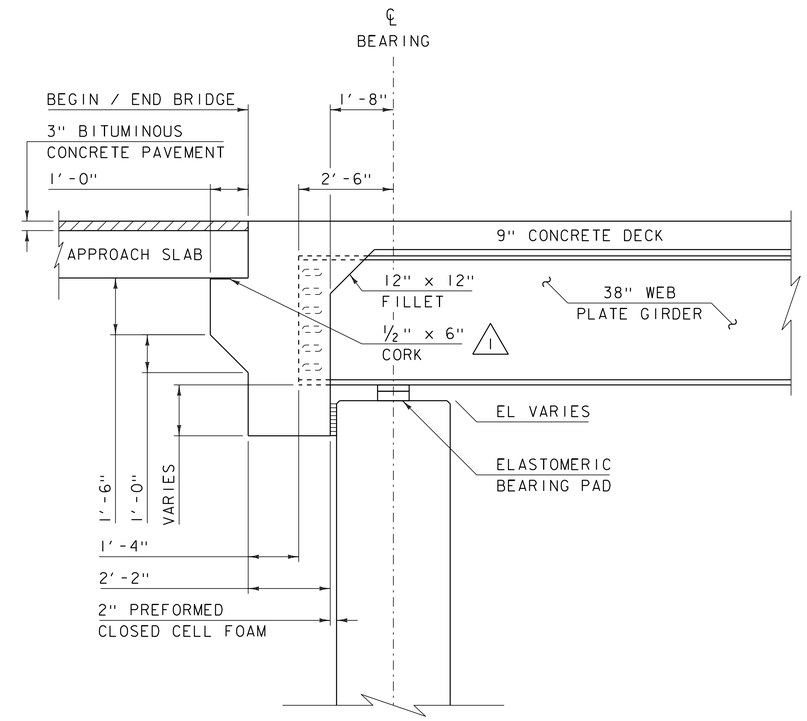

BRIDGE 43N END DETAIL

SCALE ½" = 1'-0"

REVISION	DATE	DESCRIPTION	BY
1	01-06-2015	CORK DIMENSION	RK

PROJECT NAME: HARTFORD
PROJECT NUMBER: IM 091-2(79)

FILE NAME: s12a132bridge_end_detail.dgn
PROJECT LEADER: K. HIGGINS
DESIGNED BY: R. KLINEFELTER
SUPERSTRUCTURE TYPICALS 43N

PLOT DATE: 06-JAN-2015
DRAWN BY: K. FRIEDLAND
CHECKED BY: J. SALVATORI
SHEET 86 OF 166

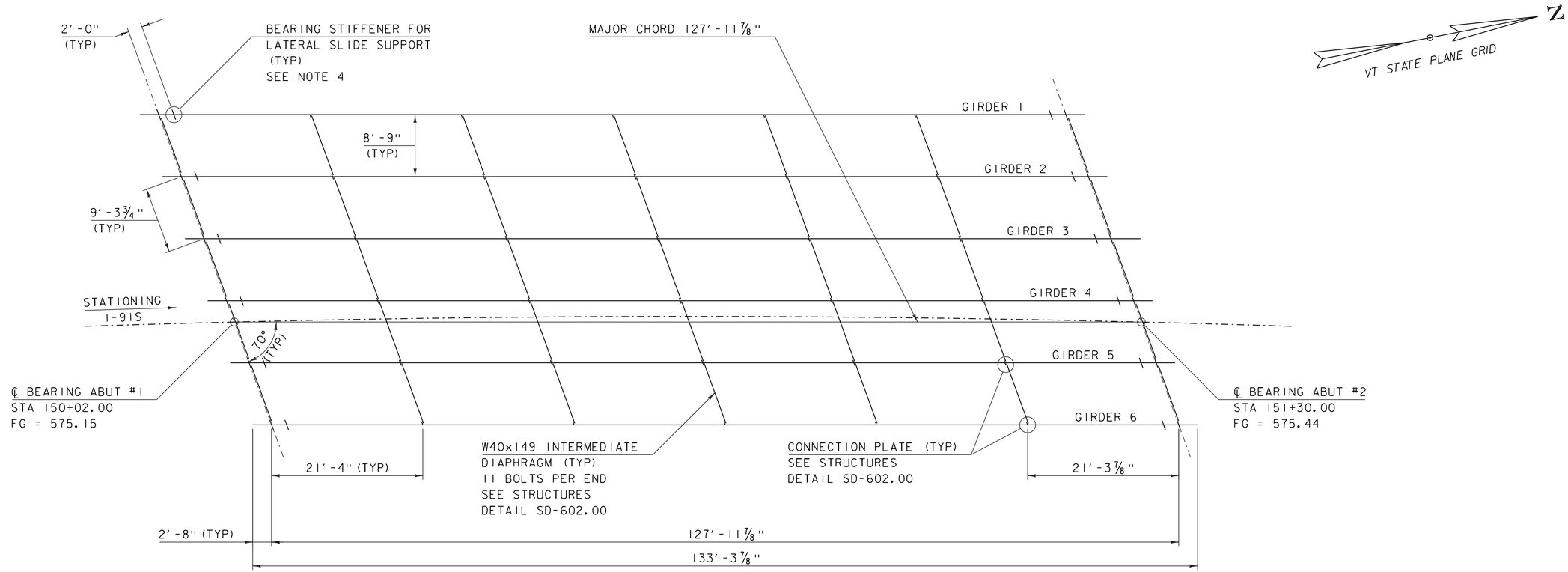

BRIDGE 43S FRAMING PLAN

SCALE 1/8" = 1'-0"

NOTES:

1. *CVN DENOTES THAT CHARPY V-NOTCH TEST IS REQUIRED.
2. ALL STEEL SHALL BE GRADE 50W.
3. PLACE DRIP PLATE ON LOW END OF EXTERIOR GIRDERS. SEE STRUCTURES DETAIL SD-601.00.
4. THE CONTRACTOR IS RESPONSIBLE FOR VERIFYING THE LOCATION OF THE BEARING STIFFENERS FOR THE LATERAL SLIDE SUPPORT.

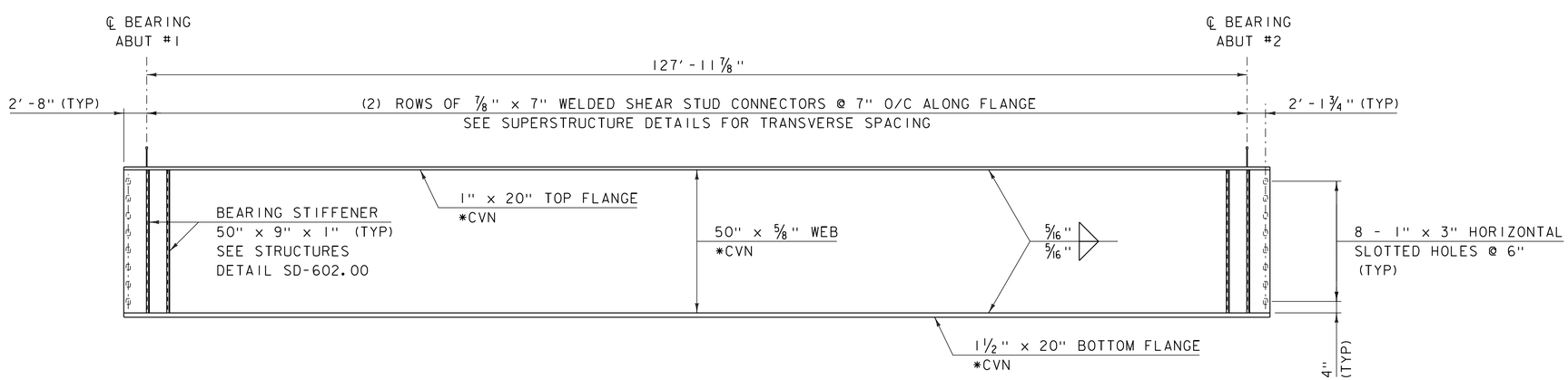

BRIDGE 43S TYPICAL GIRDER ELEVATION

HORIZONTAL SCALE 1/8" = 1'-0"
VERTICAL SCALE 1/2" = 1'-0"

PROJECT NAME: HARTFORD	
PROJECT NUMBER: IM 091-2(79)	
FILE NAME: s12a132fra43S.dgn	PLOT DATE: 15-DEC-2014
PROJECT LEADER: K. HIGGINS	DRAWN BY: R. KLINEFELTER
DESIGNED BY: R. KLINEFELTER	CHECKED BY: W. LAMMER
BR 43S FRAMING PLAN & GIRDER ELEVATION	SHEET 87 OF 166

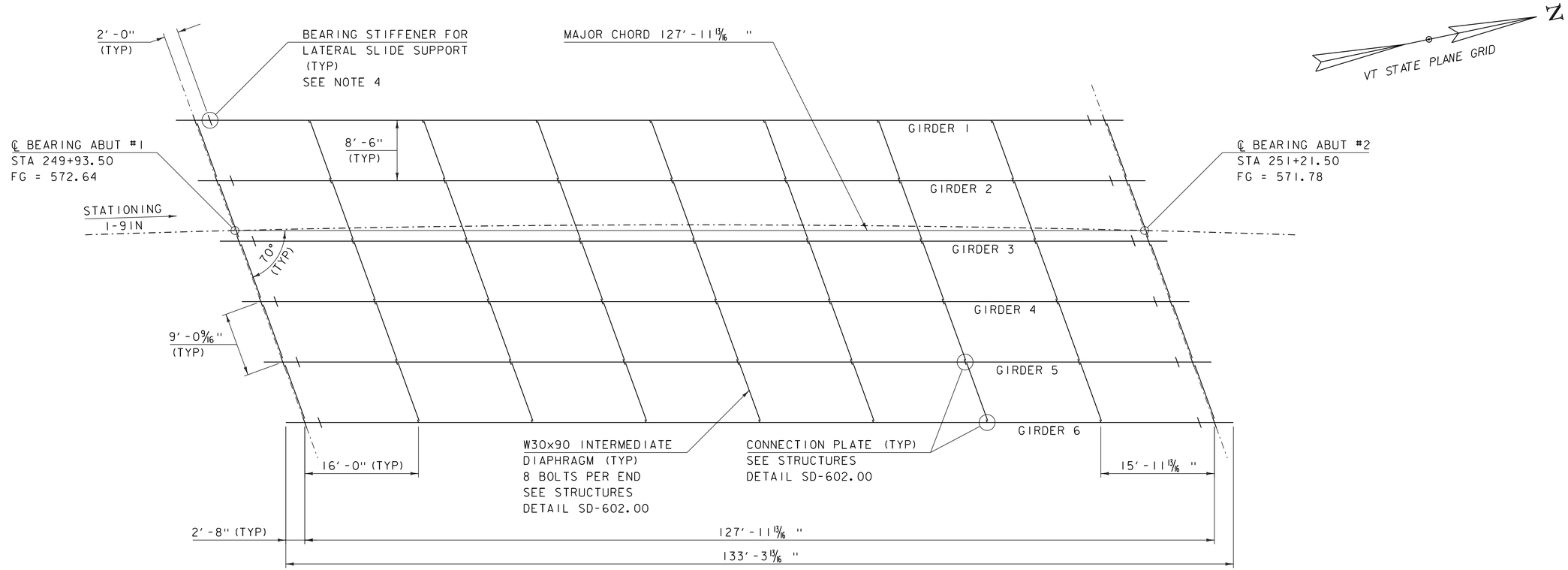

BRIDGE 43N FRAMING PLAN

SCALE 1/8"=1'-0"

NOTES:

1. *CVN DENOTES THAT CHARPY V-NOTCH TEST IS REQUIRED.
2. THE GIRDER BOTTOM FLANGE SHALL BE GRADE HPS 70W. ALL OTHER STEEL SHALL BE GRADE 50W.
3. PLACE DRIP PLATE ON LOW END OF EXTERIOR GIRDERS. SEE STRUCTURES DETAIL SD-601.00.
4. THE CONTRACTOR IS RESPONSIBLE FOR VERIFYING THE LOCATION OF THE BEARING STIFFENERS FOR THE LATERAL SLIDE SUPPORT.

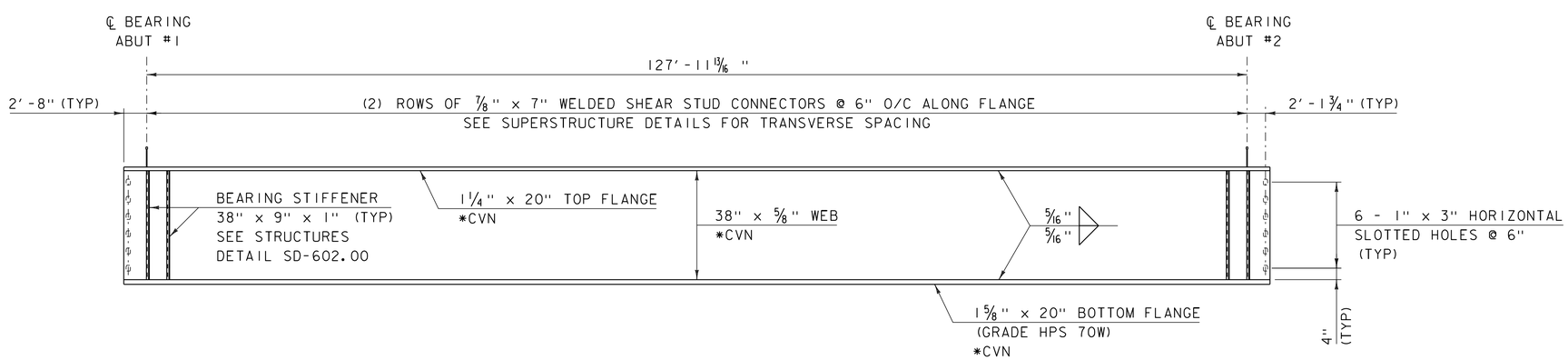

BRIDGE 43N TYPICAL GIRDER ELEVATION

HORIZONTAL SCALE 1/8"=1'-0"
VERTICAL SCALE 1/2"=1'-0"

PROJECT NAME: HARTFORD	
PROJECT NUMBER: IM 091-2(79)	
FILE NAME: s12a132fra43N.dgn	PLOT DATE: 15-DEC-2014
PROJECT LEADER: K. HIGGINS	DRAWN BY: R. KLINEFELTER
DESIGNED BY: R. KLINEFELTER	CHECKED BY: W. LAMMER
BR 43N FRAMING PLAN & GIRDER ELEVATION	SHEET 88 OF 166

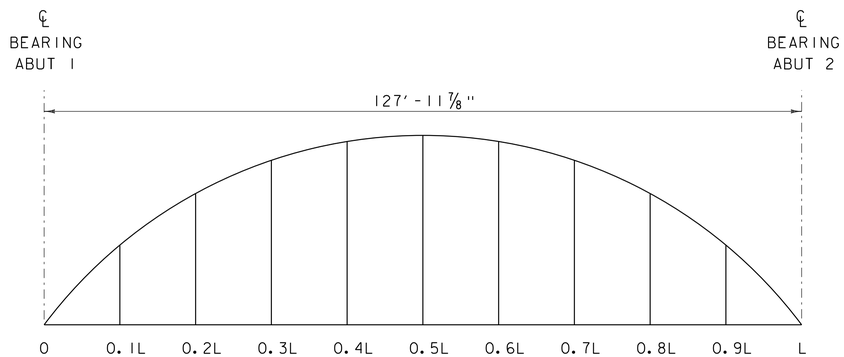

BRIDGE 43S CAMBER DIAGRAM

NOT TO SCALE

	0	0.1L	0.2L	0.3L	0.4L	0.5L	0.6L	0.7L	0.8L	0.9L	L
Steel Deflection	0	9/16	1 1/8	1 1/2	1 13/16	1 7/8	1 13/16	1 1/2	1 1/8	9/16	0
Precast Deck Panel Deflection	0	9/16	1 1/16	1 1/2	1 3/4	1 13/16	1 3/4	1 1/2	1 1/16	9/16	0
Cast-in-Place Slab Deflection	0	1 1/8	2 1/8	2 15/16	3 3/8	3 9/16	3 3/8	2 15/16	2 1/8	1 1/8	0
Superimposed Deflection	0	3/16	3/8	1/2	5/8	5/8	5/8	1/2	3/8	3/16	0
Total Slab & Super Deflection	0	1 5/16	2 1/2	3 7/16	4	4 3/16	4	3 7/16	2 1/2	1 5/16	0
Total Panel, Slab & Super Deflection	0	1 7/8	3 9/16	4 15/16	5 3/4	6	5 3/4	4 15/16	3 9/16	1 7/8	0
Total Deflection	0	2 7/16	4 11/16	6 7/16	7 9/16	7 7/8	7 9/16	6 7/16	4 11/16	2 7/16	0
Residual Camber	0	9/16	1	1 5/16	1 9/16	1 5/8	1 9/16	1 5/16	1	9/16	0
Total Camber	0	3	5 11/16	7 3/4	9 1/8	9 1/2	9 1/8	7 3/4	5 11/16	3	0

BRIDGE 43S

1 CAMBER AND DEFLECTION

(INCHES)

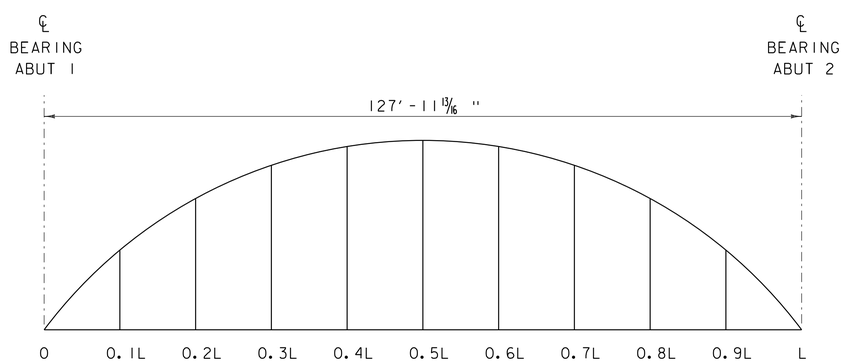

BRIDGE 43N CAMBER DIAGRAM

NOT TO SCALE

	0	0.1L	0.2L	0.3L	0.4L	0.5L	0.6L	0.7L	0.8L	0.9L	L
Steel Deflection	0	7/8	1 5/8	2 1/4	2 5/8	2 3/4	2 5/8	2 1/4	1 5/8	7/8	0
Precast Deck Panel Deflection	0	7/8	1 5/8	2 1/4	2 5/8	2 3/4	2 5/8	2 1/4	1 5/8	7/8	0
Cast-in-Place Slab Deflection	0	1 11/16	3 3/16	4 3/8	5 1/8	5 3/8	5 1/8	4 3/8	3 3/16	1 11/16	0
Superimposed Deflection	0	5/16	9/16	13/16	15/16	1	15/16	13/16	9/16	5/16	0
Total Slab & Super Deflection	0	2	3 3/4	5 3/16	6 1/16	6 3/8	6 1/16	5 3/16	3 3/4	2	0
Total Panel, Slab & Super Deflection	0	2 7/8	5 3/8	7 7/16	8 11/16	9 1/8	8 11/16	7 7/16	5 3/8	2 7/8	0
Total Deflection	0	3 3/4	7	9 11/16	11 5/16	11 7/8	11 5/16	9 11/16	7	3 3/4	0
Residual Camber	0	9/16	1	1 5/16	1 9/16	1 5/8	1 9/16	1 5/16	1	9/16	0
Total Camber	0	4 5/16	8	11	12 7/8	13 1/2	12 7/8	11	8	4 5/16	0

BRIDGE 43N

1 CAMBER AND DEFLECTION

(INCHES)

REVISION	DATE	DESCRIPTION	BY
1	12-16-2014	ADDITIONAL INFORMATION ADDED	RK

PROJECT NAME: HARTFORD
PROJECT NUMBER: IM 091-2(79)

FILE NAME: s12a132cam.dgn
PROJECT LEADER: K. HIGGINS
DESIGNED BY: R. KLINEFELTER
CAMBER & DEFLECTION

PLOT DATE: 16-DEC-2014
DRAWN BY: K. FRIEDLAND
CHECKED BY: W. LAMMER
SHEET 89 OF 166

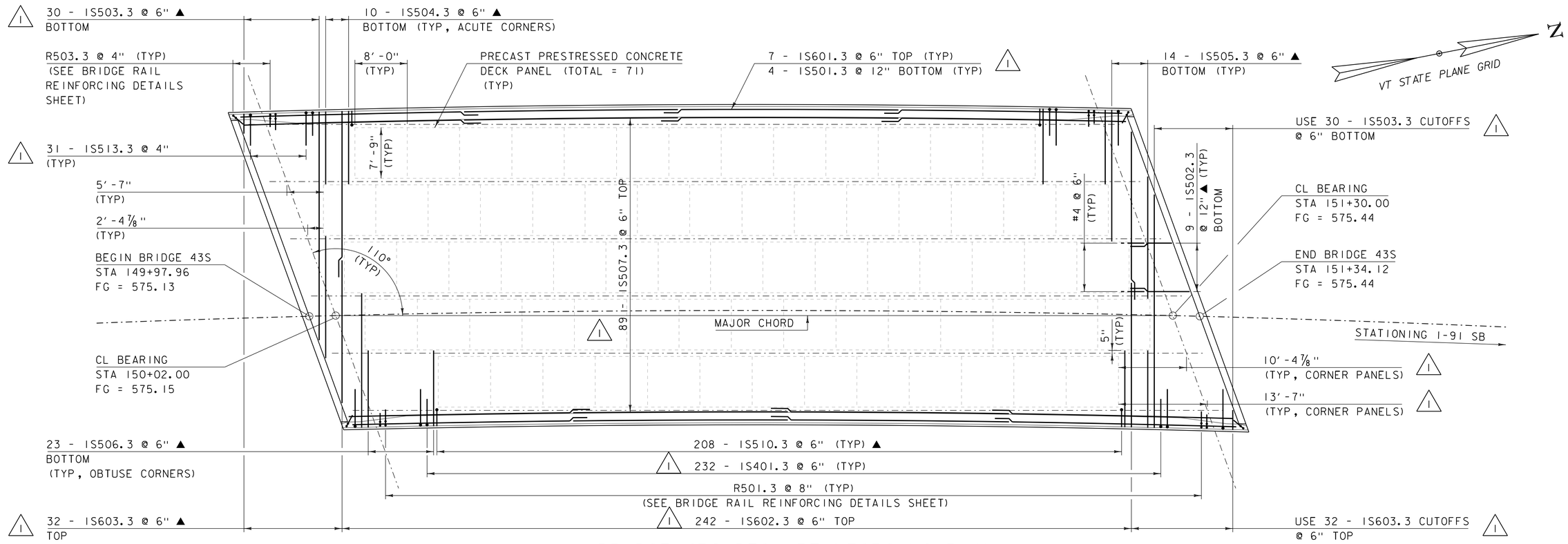

BRIDGE 43S DECK REINFORCING PLAN

SCALE 1/8" = 1'-0"

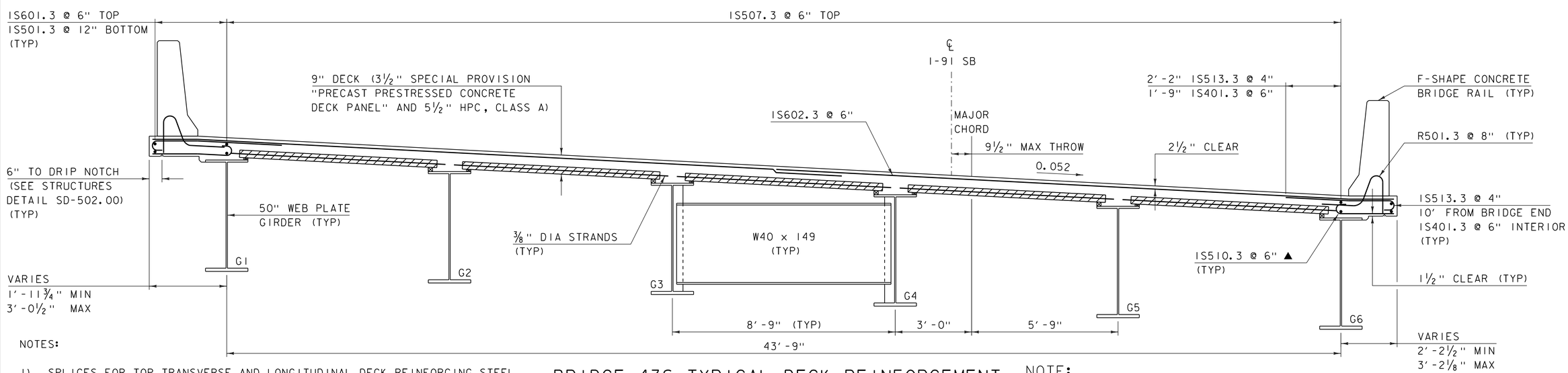

BRIDGE 43S TYPICAL DECK REINFORCEMENT

SCALE 1/2" = 1'-0"

NOTES:

1) SPLICES FOR TOP TRANSVERSE AND LONGITUDINAL DECK REINFORCING STEEL SHALL NOT BE LOCATED OVER PANEL JOINTS.

2) PRIOR TO PLACING THE DECK CONCRETE, LAITANCE OR OTHER CONTAMINATES THAT WOULD INTERFERE WITH FULL BOND TO THE PANELS SHALL BE REMOVED BY AN APPROVED METHOD PER SECTION 510.12(b)(4).

3) PRIOR TO PLACING THE DECK CONCRETE, THE PRECAST PRESTRESSED CONCRETE DECK PANELS SHALL BE WETTED IN ACCORDANCE WITH SECTION 501.10(d).

REVISION	DATE	DESCRIPTION	BY
1	01-06-2015	REINFORCING STEEL BAR COUNTS AND DIMENSIONS TO DECK PANELS	RK

NOTE:

NF = NEAR FACE
FF = FAR FACE
EF = EACH FACE
▲ = CUT TO FIT IN FIELD
3" CLEAR, UNLESS OTHERWISE SPECIFIED ON THE PLANS.
2'-2" BAR LAP FOR #5 REINFORCING
2'-7" BAR LAP FOR #6 REINFORCING

PROJECT NAME: HARTFORD
PROJECT NUMBER: IM 091-2(79)

FILE NAME: s12a132sup43S.dgn
PROJECT LEADER: K. HIGGINS
DESIGNED BY: R. KLINEFELTER
43S DECK REINFORCING PLAN

PLOT DATE: 06-JAN-2015
DRAWN BY: K. FRIEDLAND
CHECKED BY: R. KLINEFELTER
SHEET 90 OF 166

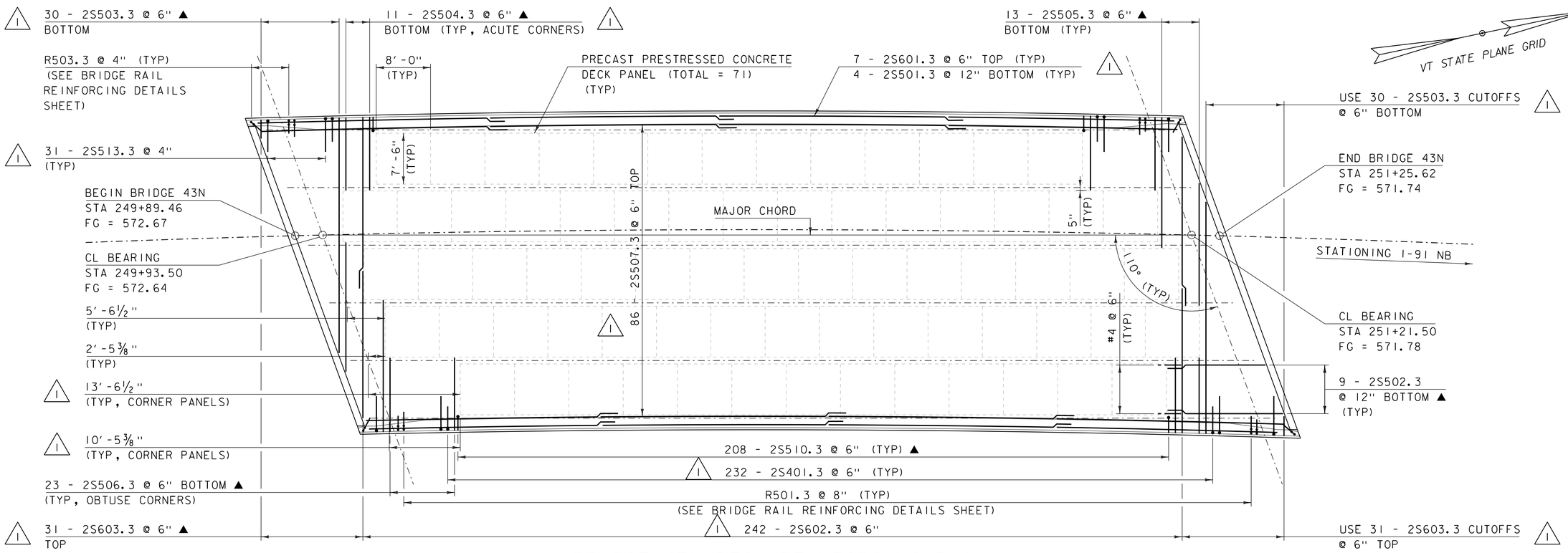

BRIDGE 43N DECK REINFORCING PLAN

SCALE ⅛" = 1'-0"

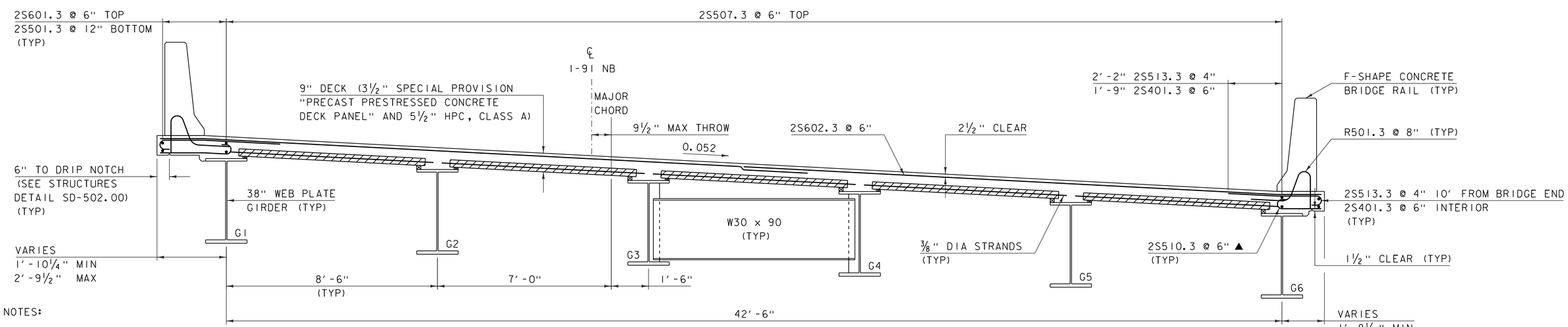

BRIDGE 43N TYPICAL DECK REINFORCEMENT

SCALE ½" = 1'-0"

NOTES:

1) SPLICES FOR TOP TRANSVERSE AND LONGITUDINAL DECK REINFORCING STEEL SHALL NOT BE LOCATED OVER PANEL JOINTS.

2) PRIOR TO PLACING THE DECK CONCRETE, LAITANCE OR OTHER CONTAMINATES THAT WOULD INTERFERE WITH FULL BOND TO THE PANELS SHALL BE REMOVED BY AN APPROVED METHOD PER SECTION 510.12(b)(4).

3) PRIOR TO PLACING THE DECK CONCRETE, THE PRECAST PRESTRESSED CONCRETE DECK PANELS SHALL BE WETTED IN ACCORDANCE WITH SECTION 501.10(d).

REVISION	DATE	DESCRIPTION	BY
1	01-05-2015	REINFORCING STEEL BAR COUNTS AND DIMENSIONS TO DECK PANELS	RK

NOTE:

NF = NEAR FACE
FF = FAR FACE
EF = EACH FACE
▲ = CUT TO FIT IN FIELD
3" CLEAR, UNLESS OTHERWISE SPECIFIED ON THE PLANS.
2'-2" BAR LAP FOR #5 REINFORCING
2'-7" BAR LAP FOR #6 REINFORCING

PROJECT NAME: HARTFORD
PROJECT NUMBER: IM 091-2(79)

FILE NAME: s12a132sup43N.dgn
PROJECT LEADER: K. HIGGINS
DESIGNED BY: R. KLINEFELTER
43N DECK REINFORCING PLAN

PLOT DATE: 05-JAN-2015
DRAWN BY: K. FRIEDLAND
CHECKED BY: R. KLINEFELTER
SHEET 91 OF 166

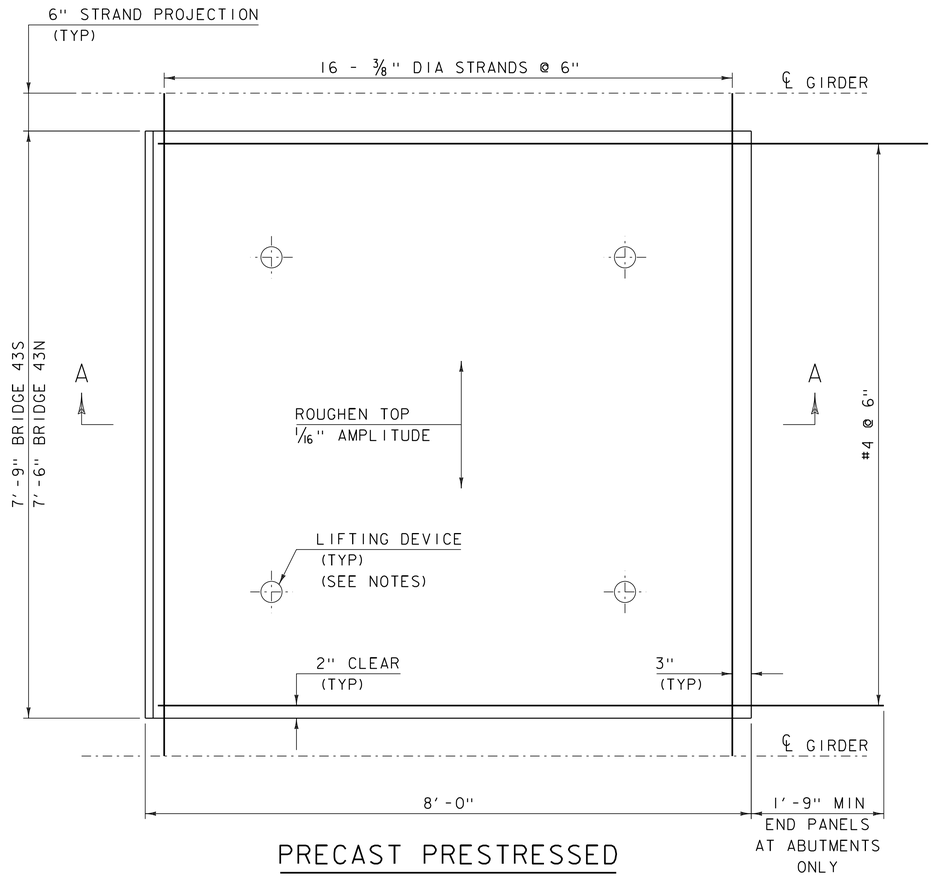

PRECAST PRESTRESSED CONCRETE DECK PANEL PLAN

SCALE 1"=1'-0"

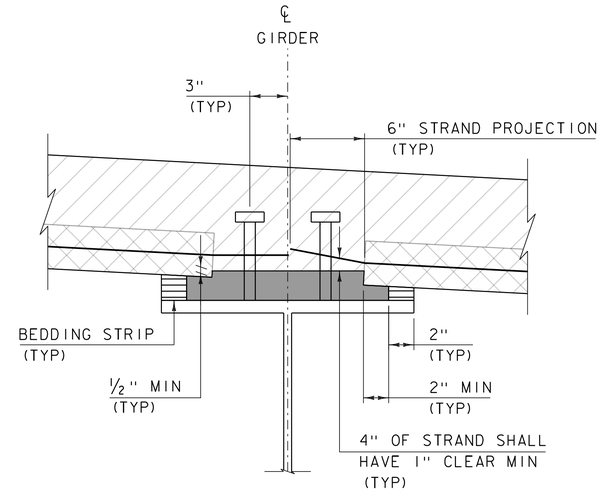

HAUNCH DETAIL

SCALE 2"=1'-0"

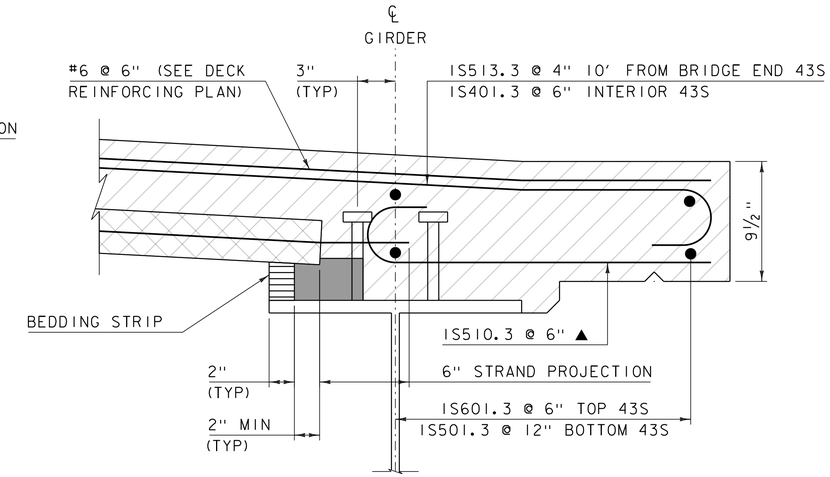

BRIDGE 43S SHOWN, BRIDGE 43N SIMILAR.

TYPICAL OVERHANG

SCALE 2"=1'-0"

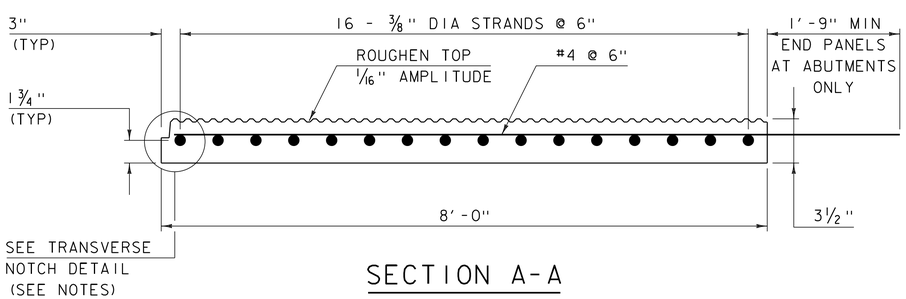

SECTION A-A

HOR. SCALE 1"=1'-0"
VER. SCALE 2"=1'-0"

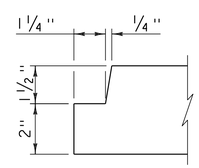

TRANSVERSE NOTCH DETAIL

SCALE 4"=1'-0"

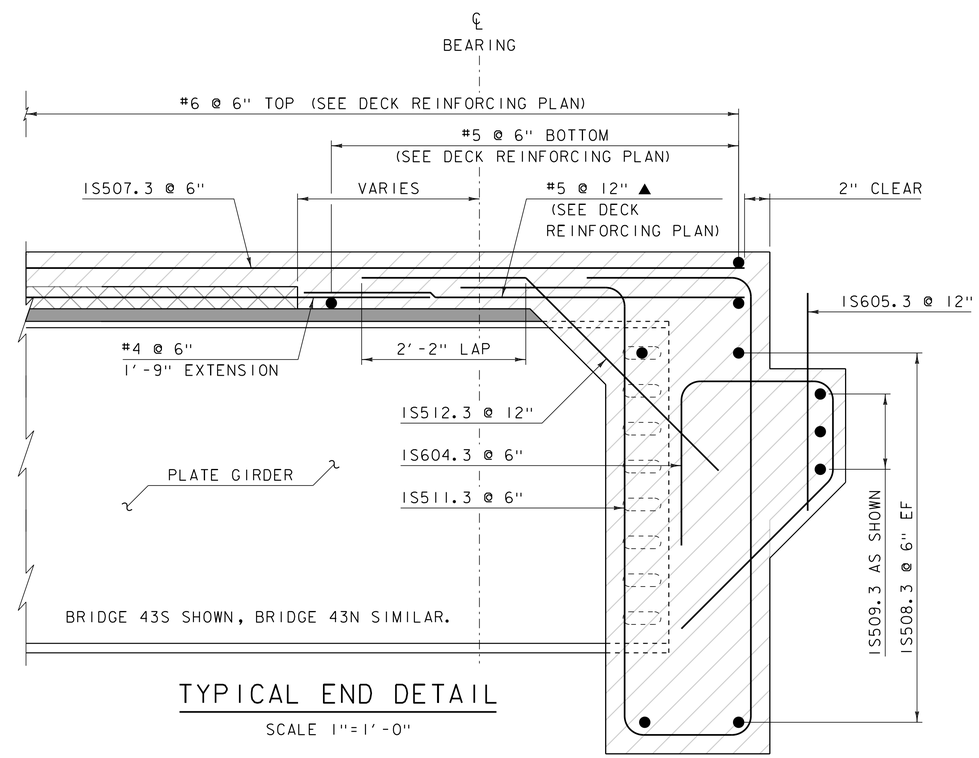

TYPICAL END DETAIL

SCALE 1"=1'-0"

NOTES:

1) LIFTING DEVICE SHALL BE DESIGNED BY THE FABRICATOR.

2) SHEAR CONNECTORS AND STRANDS PROJECTING FROM PANELS SHALL BE CLEANED OF ANY EXCESS MORTAR AFTER GROUT BED PLACEMENT.

3) STRANDS PROJECTING FROM PANELS SHALL BE SECURED IN PLACE DURING DECK CONCRETE PLACEMENT.

4) OMIT TRANSVERSE NOTCH ON END PANELS AT ABUTMENTS.

NOTE:

NF = NEAR FACE
FF = FAR FACE
EF = EACH FACE
▲ = CUT TO FIT IN FIELD
3" CLEAR, UNLESS OTHERWISE SPECIFIED ON THE PLANS.
2'-2" BAR LAP UNLESS OTHERWISE SPECIFIED ON THE PLANS.

LEGEND

CONCRETE, HPC CLASS A

PRECAST PRESTESSED CONCRETE DECK PANEL

MORTAR, TYPE IV

PROJECT NAME: HARTFORD	
PROJECT NUMBER: IM 091-2(79)	
FILE NAME: s12a132sup43S.dgn	PLOT DATE: 15-DEC-2014
PROJECT LEADER: K. HIGGINS	DRAWN BY: K. FRIEDLAND
DESIGNED BY: R. KLINEFELTER	CHECKED BY: W. LAMMER
SUPERSTRUCTURE DETAILS	SHEET 92 OF 166

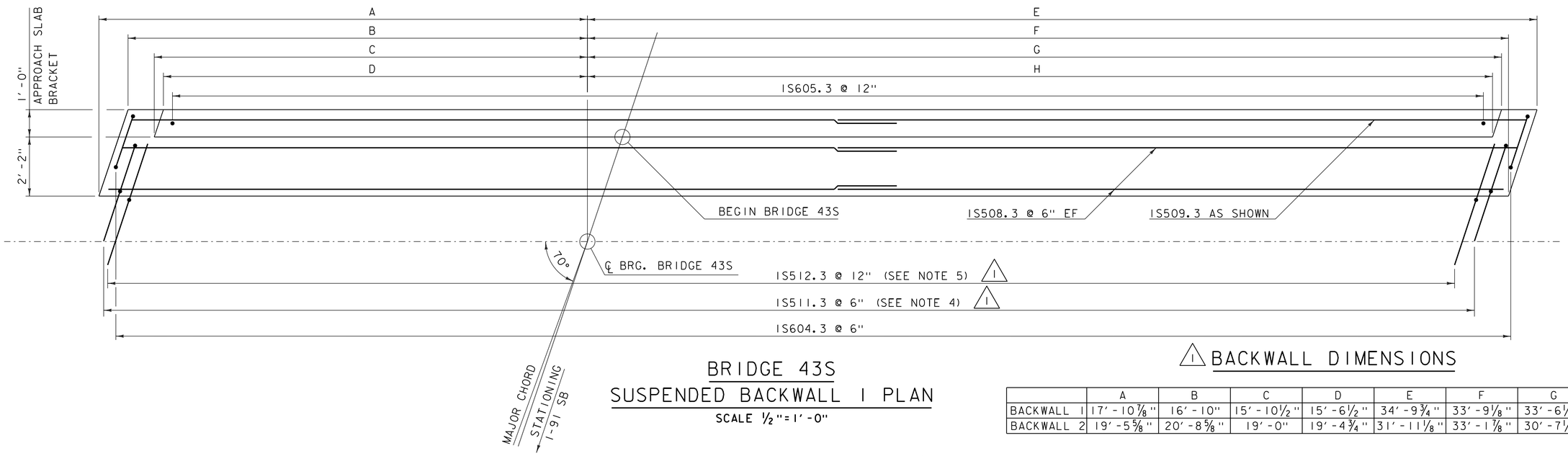

BRIDGE 43S
SUSPENDED BACKWALL 1 PLAN

SCALE ½"=1'-0"

1 BACKWALL DIMENSIONS

	A	B	C	D	E	F	G	H
BACKWALL 1	17'-10⅞"	16'-10"	15'-10½"	15'-6½"	34'-9¾"	33'-9⅛"	33'-6⅛"	33'-2⅛"
BACKWALL 2	19'-5⅝"	20'-8⅝"	19'-0"	19'-4¾"	31'-11⅛"	33'-1⅞"	30'-7¼"	30'-11⅞"

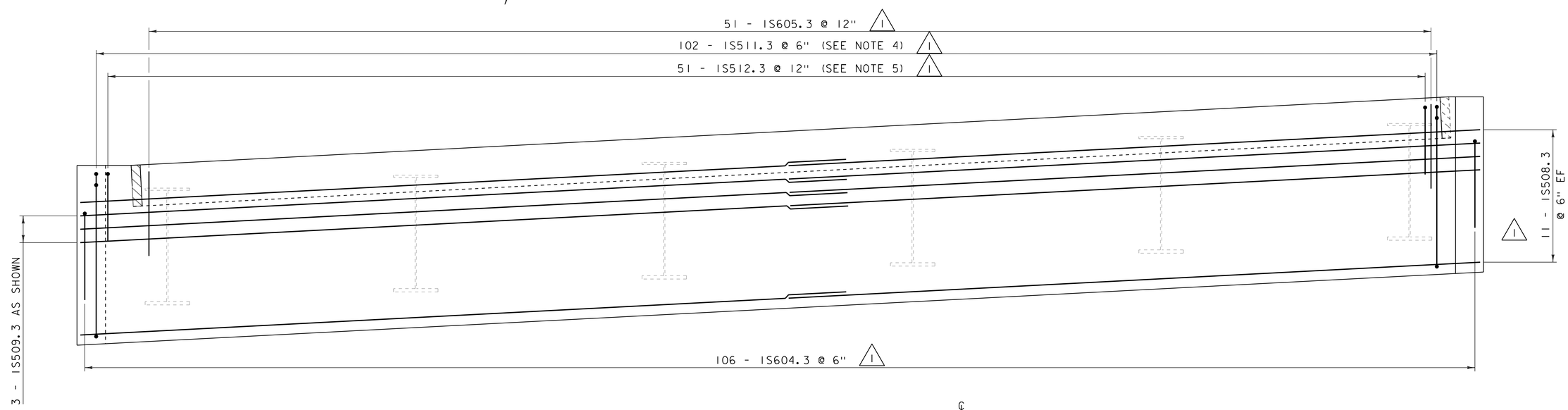

BRIDGE 43S
SUSPENDED BACKWALL 1 ELEVATION

SCALE ½"=1'-0"

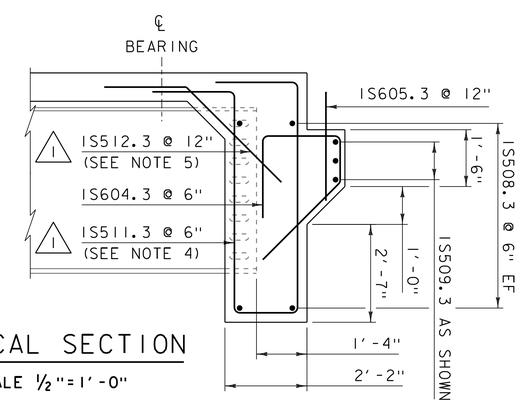

TYPICAL SECTION

SCALE ½"=1'-0"

NOTES:

1) BACKWALL 1 SHOWN. BACKWALL 2 SIMILAR.

2) BRIDGE DECK REINFORCING NOT SHOWN FOR CLARITY.

3) A TEMPLATE SHALL BE USED TO LAYOUT 1S605.3 BARS TO ENSURE PROPER ALIGNMENT WITH DUCTS IN APPROACH SLABS.

1 4) AT EACH GIRDER LOCATION, BUNDLE (2) 1S511.3 BARS ON EACH SIDE OF THE GIRDER FLANGE AND OMIT THE (3) 1S511.3 BARS THAT FALL WITHIN THE WIDTH OF THE FLANGE.

1 5) AT EACH GIRDER LOCATION, OMIT (1) 1S512.3 BAR THAT FALLS WITHIN THE WIDTH OF THE FLANGE.

REVISION	DATE	DESCRIPTION	BY
1	01-06-2015	REINFORCING STEEL BAR COUNTS, NOTES, AND BACKWALL 2 DIMENSIONS	RK

NOTE:

NF = NEAR FACE
FF = FAR FACE
EF = EACH FACE
▲ = CUT TO FIT IN FIELD
3" CLEAR, UNLESS OTHERWISE SPECIFIED ON THE PLANS.
2'-2" BAR LAP FOR #5 REINFORCING

PROJECT NAME: HARTFORD
PROJECT NUMBER: IM 091-2(79)

FILE NAME: s12a132Backwall43S.dgn
PROJECT LEADER: K. HIGGINS
DESIGNED BY: R. KLINEFELTER
43S SUSPENDED BACKWALL DETAILS

PLOT DATE: 06-JAN-2015
DRAWN BY: K. FRIEDLAND
CHECKED BY: R. KLINEFELTER
SHEET 93 OF 166

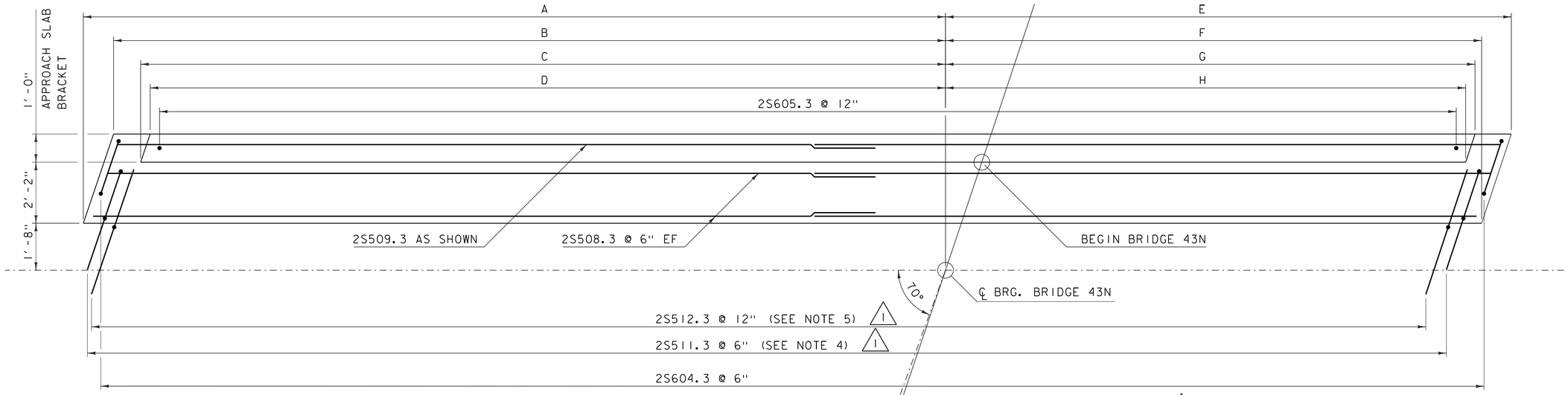

BRIDGE 43N
SUSPENDED BACKWALL 3 PLAN

SCALE ½"=1'-0"

1 BACKWALL DIMENSIONS

	A	B	C	D	E	F	G	H
BACKWALL 3	30'-6⅞"	29'-6"	28'-6½"	28'-2½"	20'-0¾"	19'-0⅛"	18'-9⅜"	18'-5⅜"
BACKWALL 4	32'-4⅝"	33'-7¾"	31'-10⅞"	32'-3⅝"	16'-10⅞"	18'-1⅝"	15'-7"	15'-11¾"

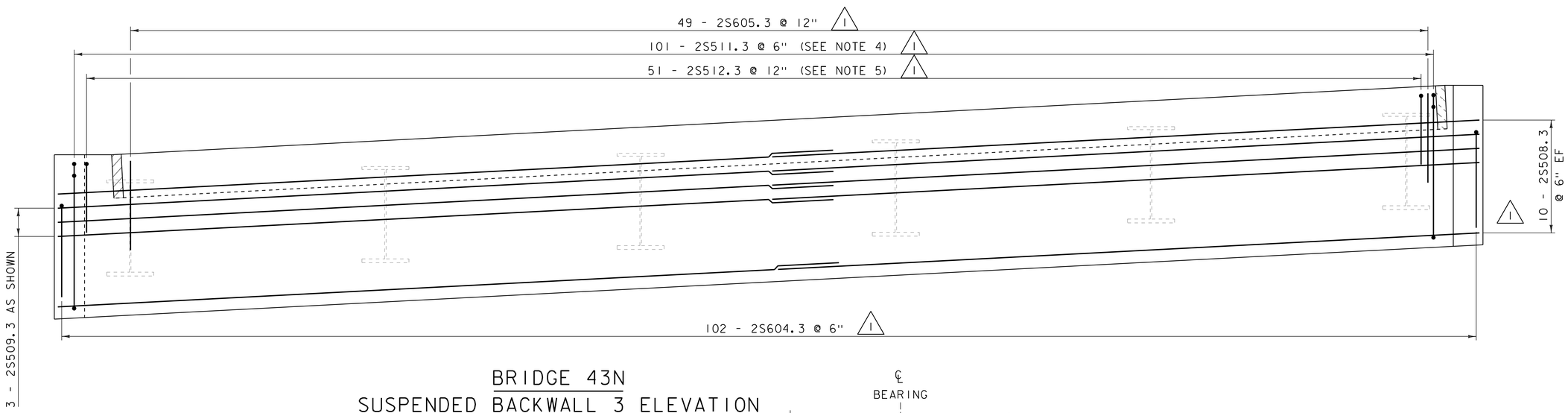

BRIDGE 43N
SUSPENDED BACKWALL 3 ELEVATION

SCALE ½"=1'-0"

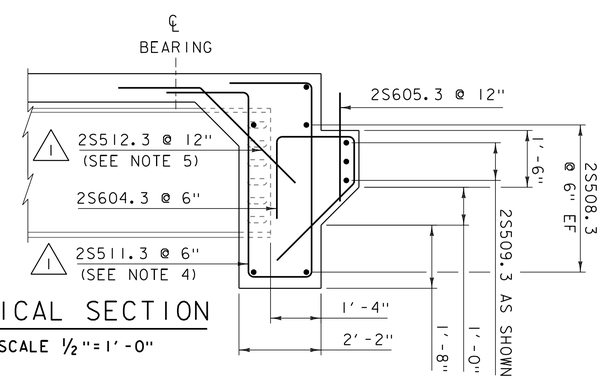

TYPICAL SECTION

SCALE ½"=1'-0"

NOTES:

1) BACKWALL 3 SHOWN. BACKWALL 4 SIMILAR.

2) BRIDGE DECK REINFORCING NOT SHOWN FOR CLARITY.

3) A TEMPLATE SHALL BE USED TO LAYOUT 2S605.3 BARS TO ENSURE PROPER ALIGNMENT WITH DUCTS IN APPROACH SLABS.

1 4) AT EACH GIRDER LOCATION, BUNDLE (2) 2S511.3 BARS ON EACH SIDE OF THE GIRDER FLANGE AND OMIT THE (3) 2S511.3 BARS THAT FALL WITHIN THE WIDTH OF THE FLANGE.

1 5) AT EACH GIRDER LOCATION, OMIT (1) 2S512.3 BAR THAT FALLS WITHIN THE WIDTH OF THE FLANGE.

REVISION	DATE	DESCRIPTION	BY
1	01-06-2015	REINFORCING STEEL BAR COUNTS, NOTES, AND BACKWALL 4 DIMENSIONS	RK

NOTE:

NF = NEAR FACE
FF = FAR FACE
EF = EACH FACE
▲ = CUT TO FIT IN FIELD
3" CLEAR, UNLESS OTHERWISE SPECIFIED ON THE PLANS.
2'-2" BAR LAP FOR #5 REINFORCING

PROJECT NAME: HARTFORD
PROJECT NUMBER: IM 091-2(79)

FILE NAME: s12a132Backwall43N.dgn
PROJECT LEADER: K. HIGGINS
DESIGNED BY: R. KLINEFELTER
43N SUSPENDED BACKWALL DETAILS

PLOT DATE: 06-JAN-2015
DRAWN BY: K. FRIEDLAND
CHECKED BY: R. KLINEFELTER
SHEET 94 OF 166

BEARING NOTES

1) BEARINGS SHALL BE PAID FOR UNDER ITEM 531.18 “BEARING DEVICE ASSEMBLY, ELASTOMERIC PAD WITH EXTERNAL LOAD PLATES”. BEARING DEVICES SHALL CONFORM TO APPLICABLE SUBSECTIONS OF SECTIONS 531 AND 731.

2) ALL MATERIALS SHALL CONFORM TO SECTION 14 OF THE AASHTO LRFD BRIDGE DESIGN SPECIFICATIONS AND SECTION 18 OF AASHTO LRFD BRIDGE CONSTRUCTION SPECIFICATIONS AND ALL AASHTO OR ASTM SPECIFICATIONS REFERENCED IN THE CONTRACT DOCUMENTS.

3) THE ELASTOMERIC COMPOUND SHALL BE VIRGIN CRYSTALLIZATION RESISTANT POLYCHLOROPRENE (NEOPRENE) OR VIRGIN NATURAL POLYISOPRENE (NATURAL RUBBER) AS THE RAW POLYMER. THE RESULTING PRODUCT SHALL BE FREE OF POROUS AREAS, WEAK SECTIONS, BUBBLES, FOREIGN MATTER, OR OTHER DEFECTS AFFECTING SERVICEABILITY. IT SHALL CONFORM TO THE REQUIREMENTS OF AASHTO M 251.

4) BEARING WAS DESIGNED USING METHOD A, WITH A DESIGN HARDNESS OF 50 POINTS AND A DESIGN SHEAR MODULUS OF 110 PSI.

5) ALTERNATE CONFIGURATIONS FOR BEARINGS MAY BE SUBMITTED FOR APPROVAL. ANY ALTERNATE SUBMITTED SHALL BE DESIGNED AND STAMPED IN ACCORDANCE WITH SUBSECTION 105.03 AND SHALL MEET THE DESIGN LOADS AND CRITERIA SHOWN ON THIS SHEET. ANY ALTERNATE SHALL BE DESIGNED PER THE LATEST AASHTO LRFD BRIDGE DESIGN SPECIFICATIONS. BRIDGE SEAT ELEVATIONS MAY BE REVISED TO ACCOMMODATE AN ALTERNATE CONFIGURATION.

6) STEEL REINFORCED ELASTOMERIC PADS SHALL BE WITHIN THE TOLERANCES LISTED IN TABLE 2 IN AASHTO M251. EXTERNAL LOAD PLATES SHALL BE WITHIN THE TOLERANCES GIVEN IN SECTION 18 OF THE AASHTO LRFD BRIDGE CONSTRUCTION SPECIFICATIONS.

7) BEARING SHALL BE SET LEVEL AND PARALLEL. THE CONCRETE UNDER THE BEARING DEVICE SHALL BE LEVEL.

8) DURING ANY WELDING, SURFACES IN CONTACT WITH THE ELASTOMER SHALL BE RESTRICTED TO 200 DEGREES FAHRENHEIT. TEMPERATURE SHALL BE DETERMINED BY TEMPERATURE INDICATING WAX PENCILS OR OTHER SUITABLE MEANS.

9) PRIOR TO ORDERING MATERIALS AND STARTING THE WORK, THE CONTRACTOR SHALL SUBMIT A DRILLING AND MORTARING PROPOSAL TO THE ENGINEER FOR APPROVAL, INCLUDING A PREMIXED MORTAR MATERIAL BRAND NAME.

10) THE DRILLED HOLES TO BE MORTARED SHALL BE THOROUGHLY CLEANED, WETTED, AND FREE OF STANDING WATER.

11) THE MORTAR SHALL BE MIXED IN A MECHANICAL MIXER ACCORDING TO THE MANUFACTURER'S RECOMMENDATIONS AND SHALL BE READILY POURABLE SO THAT WHEN POURED IT COMPLETELY FILLS THE REMAINING HOLE CAVITIES. THE PLACEMENT OF MORTAR FOR EACH BEARING SHALL BE CONTINUOUS AND COMPLETE AT ALL HOLE LOCATIONS.

12) ALL EXPOSED MORTAR SHALL BE CURED FOR A PERIOD OF NOT LESS THAN THREE (3) DAYS BY THE WETTED BURLAP METHOD IN ACCORDANCE WITH SECTION 501. CURING SHALL COMMENCE AS SOON AS PRACTICAL AFTER MORTAR PLACEMENT. THE CONTRACTOR SHALL NOT APPLY ANY FORCES TO THE BEARING RETAINERS DURING THE CURING PERIOD.

13) THE BEARING MANUFACTURER SHALL INCLUDE A TEMPERATURE SETTING TABLE ON THE FABRICATION DRAWINGS.

14) BRIDGE SEAT ELEVATIONS ARE BASED ON THE BEARING HEIGHTS SHOWN. PRIOR TO CASTING SUBSTRUCTURE UNITS, THE CONTRACTOR SHALL SUBMIT TO THE ENGINEER THE PROPOSED BEARING HEIGHT AS PROVIDED BY THE MANUFACTURER AND ANY ELEVATION MODIFICATIONS REQUIRED BEFORE CONSTRUCTING SUBSTRUCTURE UNITS.

15) ANCHOR BOLTS FURNISHED FOR BEARING SIDE RETAINERS SHALL CONFORM TO SUBSECTION 714.08. THE BOLTS, NUTS, AND WASHERS FURNISHED SHALL BE TESTED AND CERTIFIED AS MEETING THE REQUIREMENTS OF THE ZINC THICKNESS TEST AS SPECIFIED IN SUBSECTION 714.05, IN ADDITION TO ANY OTHER TEST AND CERTIFICATION REQUIREMENTS.

16) THE WELDS FOR THE SOLE PLATE CONNECTION SHOULD ONLY BE ALONG THE LONGITUDINAL GIRDER AXIS. TRANSVERSE JOINTS SHOULD BE SEALED WITH AN ACCEPTABLE CAULKING MATERIAL.

17) BEARING RETAINER ASSEMBLIES SHALL BE GALVANIZED IN ACCORDANCE WITH SUBSECTION 726.08 OR METALIZED IN ACCORDANCE WITH SUBSECTION 726.09.

18) METALIZING OR GALVANIZING THAT HAS BEEN DAMAGED SHALL BE REPAIRED USING THE METHODS DESCRIBED IN SUBSECTION 726.08.

19) ELASTOMERIC BEARINGS SHALL BE VULCANIZED TO SOLE PLATES.

20) ALL LOADS PROVIDED ARE UNFACTORED.

LOCATION		BRIDGE 43S ABUTMENT 1	BRIDGE 43S ABUTMENT 2	BRIDGE 43N ABUTMENT 3	BRIDGE 43N ABUTMENT 4
FIXED (F) or EXPANSION (EXP)		EXP	EXP	EXP	EXP
QUANTITY REQUIRED		6	6	6	6
DL+SDL (kips)		167.3	167.3	158.9	158.9
LL+IM (kips)		120.3	120.3	119.0	119.0
TOTAL DESIGN REACTION (kips)		287.6	287.6	277.9	277.9
ASKEW ANGLE (degrees)	A	70	70	70	70
ELASTOMERIC PAD (in)	L	13	13	13	13
	W	20	20	20	20
	Ns	7	7	7	7
	Ts	0.075	0.075	0.075	0.075
	Ne	6	6	6	6
	Te	3/8	3/8	3/8	3/8
	Tc	1/8	1/8	1/8	1/8
	Hp	3.025	3.025	3.025	3.025
ANCHOR BOLTS (in)	PER BRG.	4	4	4	4
	DIA.a	1 1/2	1 1/2	1 1/2	1 1/2
	Ha	21	21	21	21
ANCHOR BOLT HOLES (in)	DIA.h	1 5/8	1 5/8	1 5/8	1 5/8
	Ez	3	3	3	3
	Ex	3 1/4	3 1/4	3 1/4	3 1/4
WELD SIZE (in)	F	5/16	5/16	5/16	5/16
SOLE PLATE (in)	Ws	22	22	22	22
	Ls	15	15	15	15
	T1	1 1/2	1 1/2	1 1/2	1 5/8
	T2	1 11/16	1 11/16	1 1/2	1 1/2
RETAINER (in)	Lr	15	15	15	15
	Or	5/8	5/8	5/8	5/8
GIRDER EXTENSION (in)	EXT	32	32	32	32
BEARING HEIGHT (in)	Ht	4.619	4.619	4.525	4.588

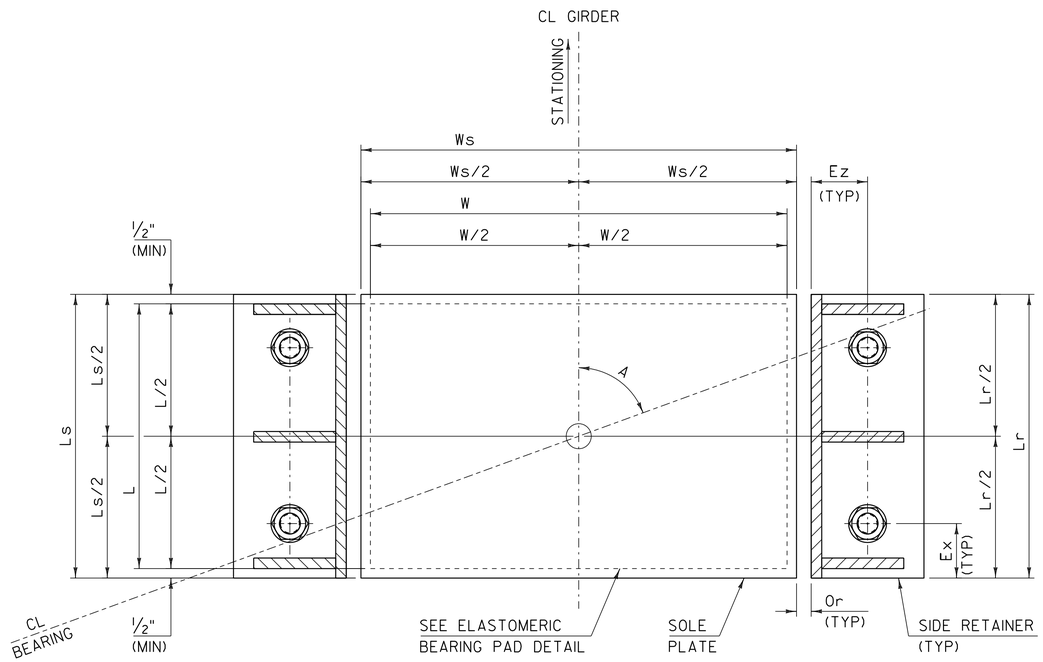

EXPANSION BEARING TYPICAL PLAN
(NTS)

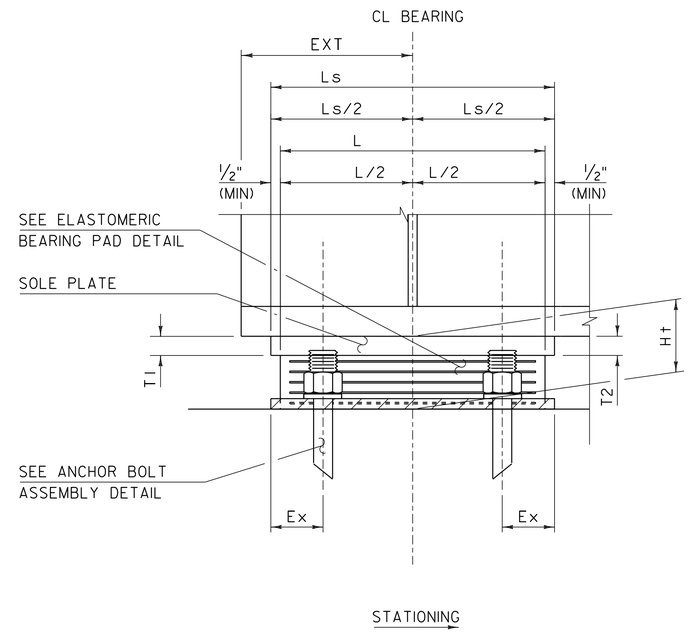

EXPANSION BEARING TYPICAL SECTION
(NTS)

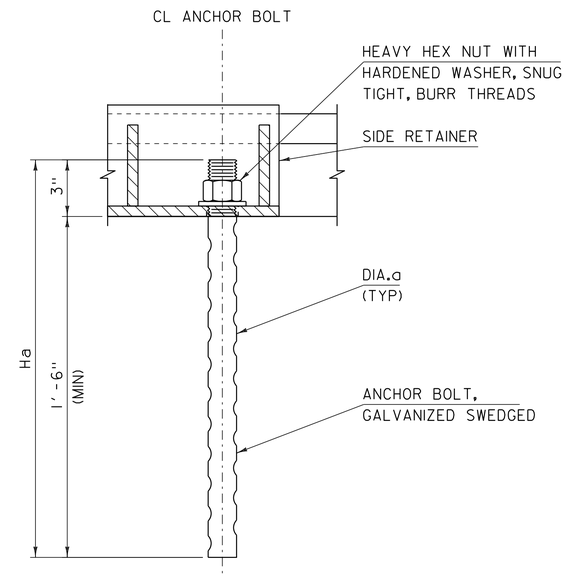

ANCHOR BOLT ASSEMBLY DETAIL
(NTS)

NOTES:
1. SECTION SHOWN AT BEGIN BRIDGE, ACTUAL LOCATION MAY VARY.
2. T2 IS ALWAYS UP STATION OF T1.
3. VERTICAL LEG AND PLATES REMOVED FOR CLARITY.

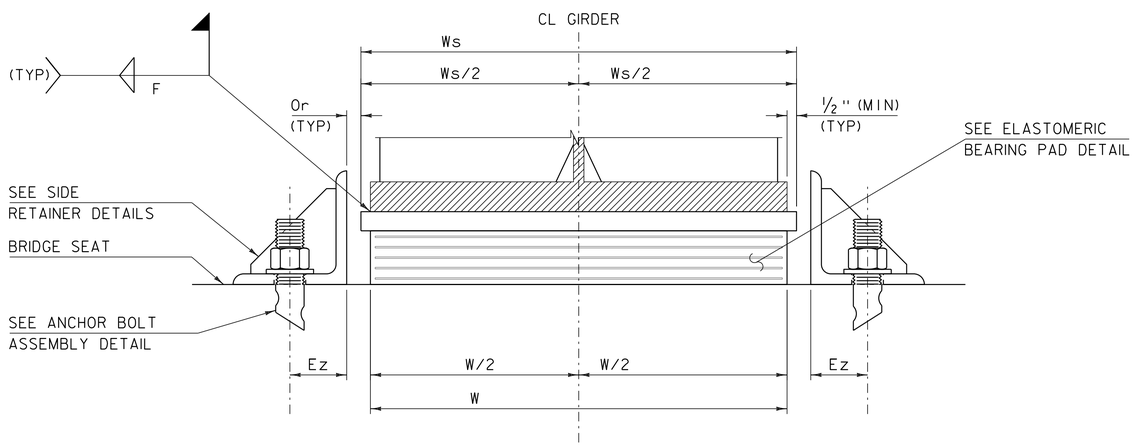

EXPANSION BEARING TYPICAL ELEVATION
(NTS)

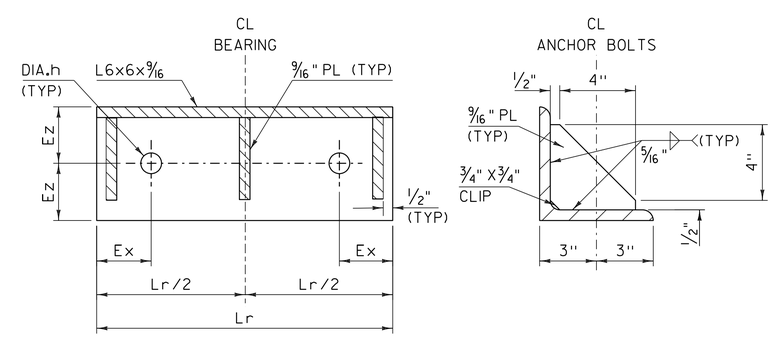

SIDE RETAINER DETAILS
(NTS)

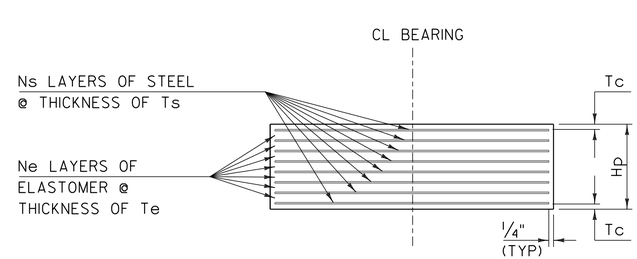

ELASTOMERIC BEARING PAD DETAIL
(NTS)

NOTE:
1. SEE BEARING TABLE ON BEARING NOTES SHEET FOR DIMENSIONS.

PROJECT NAME: HARTFORD	
PROJECT NUMBER: IM 091-2(79)	
FILE NAME: s12a132bearings.dgn	PLOT DATE: 15-DEC-2014
PROJECT LEADER: K. HIGGINS	DRAWN BY: R. KLINEFELTER
DESIGNED BY: R. KLINEFELTER	CHECKED BY: W. LAMMER
BEARING DETAILS	SHEET 96 OF 166

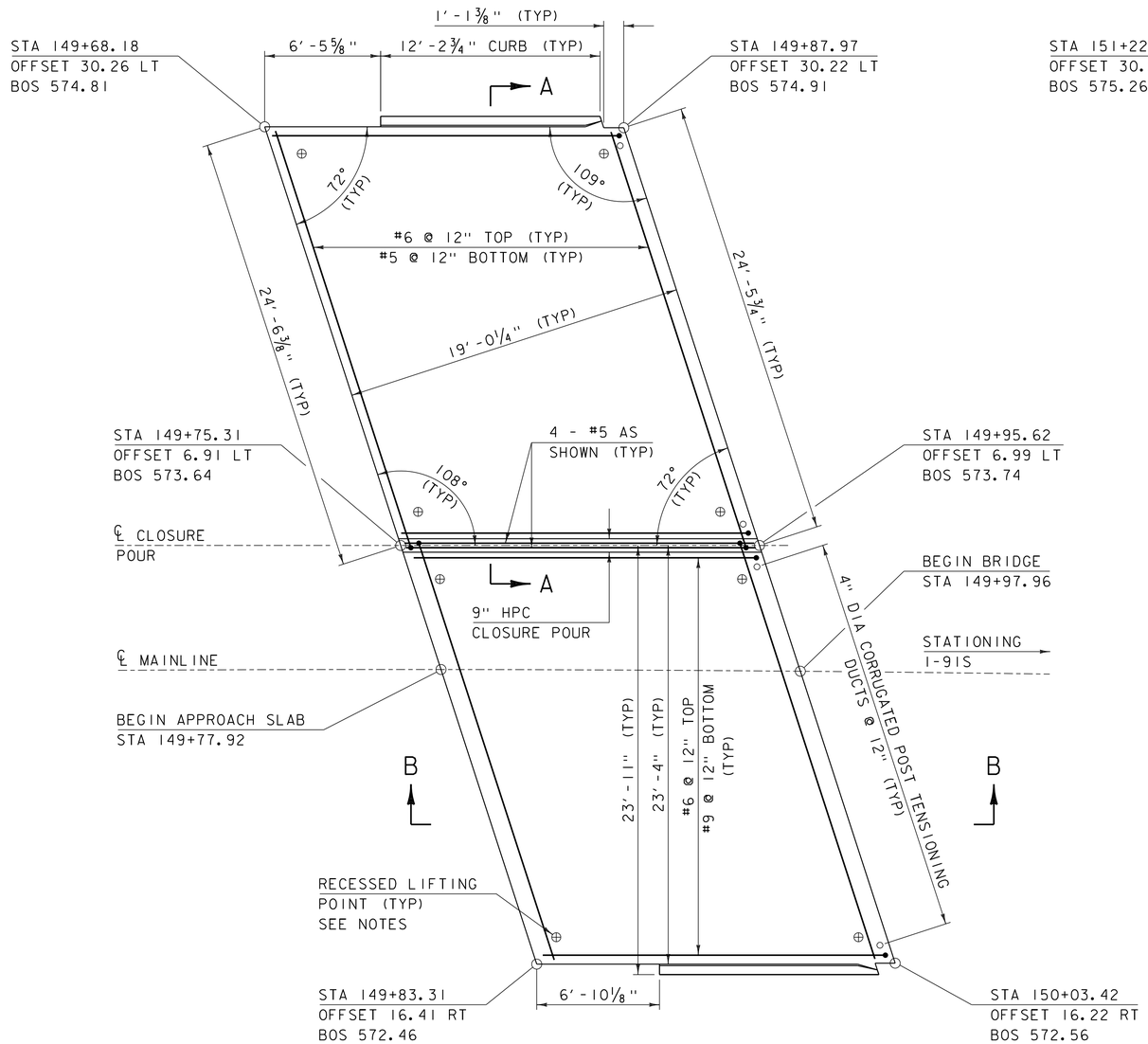

APPROACH SLAB 1 PLAN

SCALE 1/4" = 1'-0"

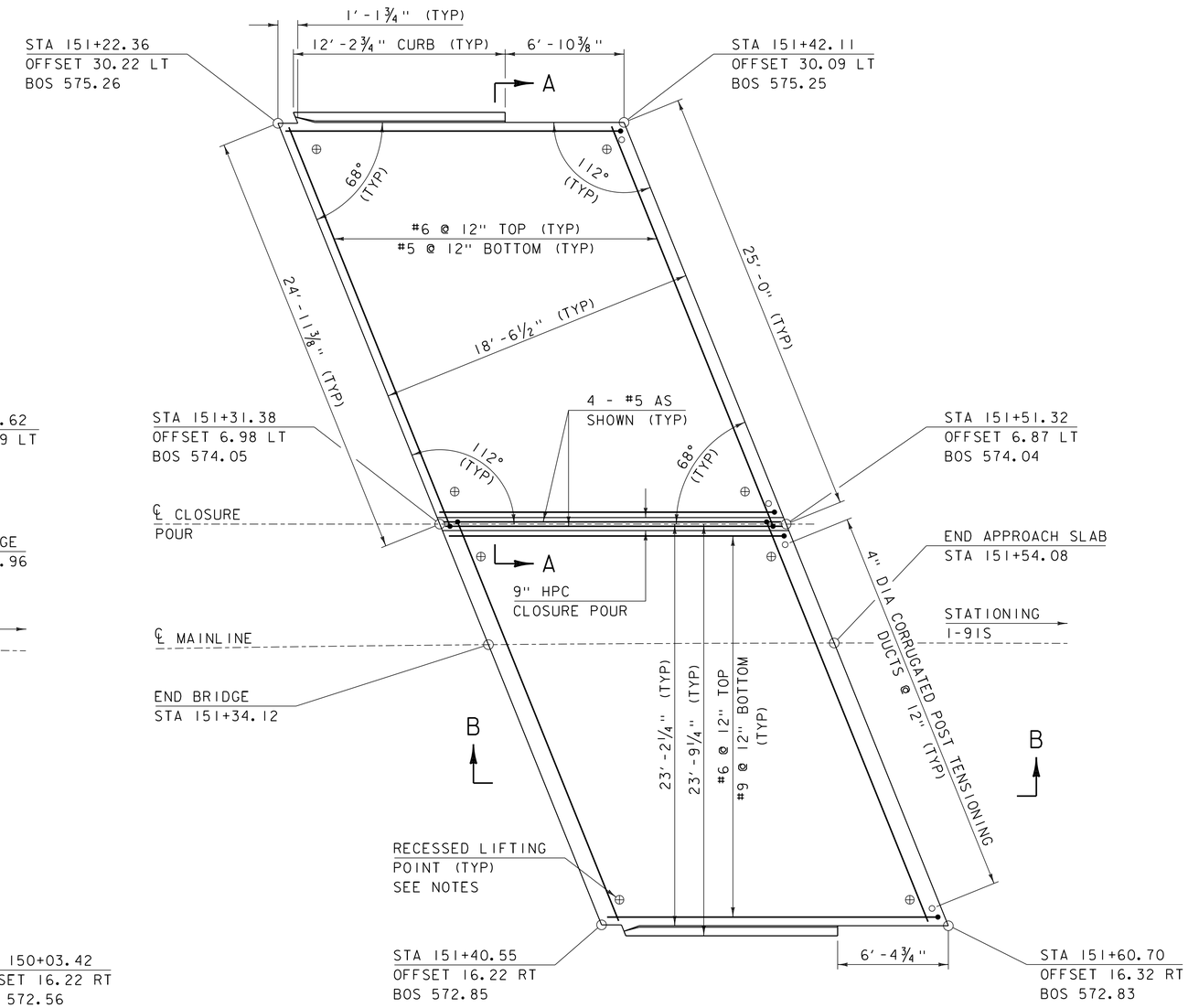

APPROACH SLAB 2 PLAN

SCALE 1/4" = 1'-0"

NOTES:

1) ALL APPROACH SLAB REINFORCING STEEL SHALL BE LEVEL II OR HIGHER.

2) BOS = BOTTOM OF SLAB

3) LIFTING POINTS SAHLL BE DESIGNED BY OTHERS AND CALCULATIONS INCLUDED WITH SUBMITTAL.

NOTE:

NF = NEAR FACE
FF = FAR FACE
EF = EACH FACE
3" CLEAR, UNLESS OTHERWISE SPECIFIED ON THE PLANS.
2'-2" BAR LAP UNLESS OTHERWISE SPECIFIED ON THE PLANS.

PROJECT NAME: HARTFORD	
PROJECT NUMBER: IM 091-2(79)	
FILE NAME: s12a132apslabs_43S.dgn	PLOT DATE: 15-DEC-2014
PROJECT LEADER: K. HIGGINS	DRAWN BY: K. FRIEDLAND
DESIGNED BY: G. LAROCHE	CHECKED BY: W. LAMMER
APPROACH SLAB DETAILS 43S	SHEET 97 OF 166

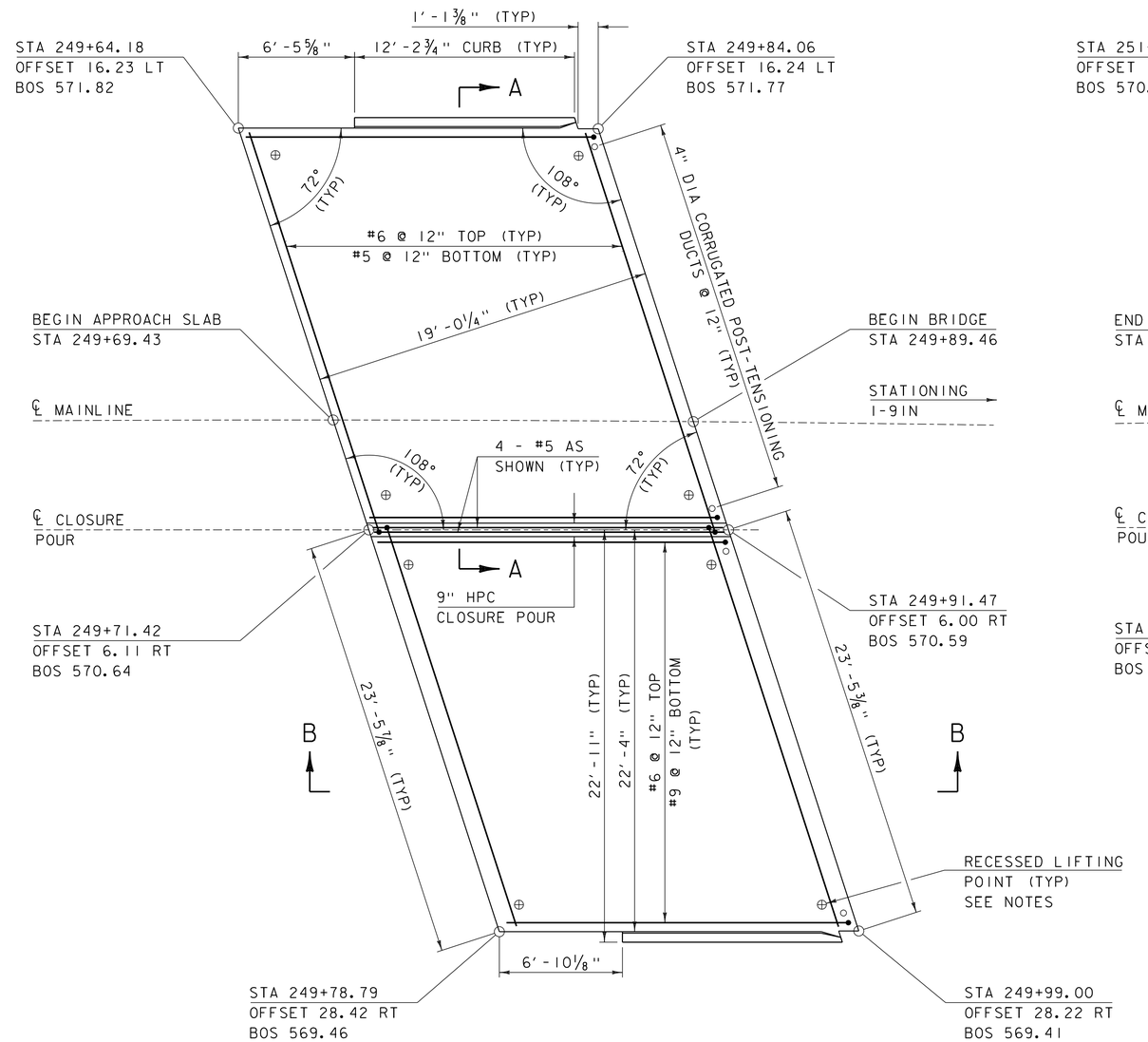

APPROACH SLAB 3 PLAN

SCALE 1/4" = 1'-0"

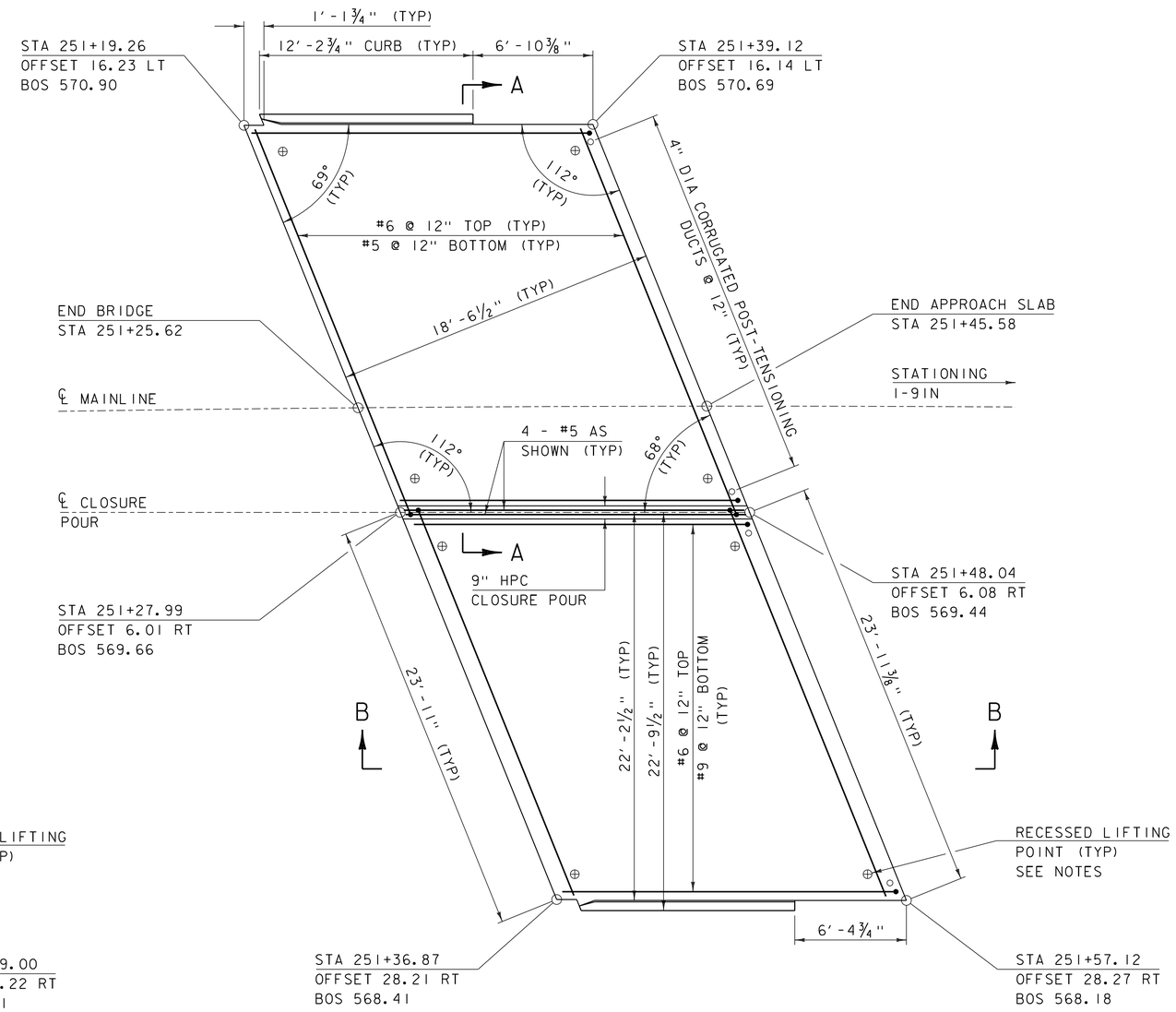

APPROACH SLAB 4 PLAN

SCALE 1/4" = 1'-0"

NOTES:

1) ALL APPROACH SLAB REINFORCING STEEL SHALL BE LEVEL II OR HIGHER.

2) BOS = BOTTOM OF SLAB

3) LIFTING POINTS SAHLL BE DESIGNED BY OTHERS AND CALCULATIONS INCLUDED WITH SUBMITTAL.

NOTE:

NF = NEAR FACE
FF = FAR FACE
EF = EACH FACE
3" CLEAR, UNLESS OTHERWISE SPECIFIED ON THE PLANS.
2'-2" BAR LAP UNLESS OTHERWISE SPECIFIED ON THE PLANS.

PROJECT NAME: HARTFORD	
PROJECT NUMBER: IM 091-2(79)	
FILE NAME: sl2al32apslabs_43N.dgn	PLOT DATE: 15-DEC-2014
PROJECT LEADER: K. HIGGINS	DRAWN BY: K. FRIEDLAND
DESIGNED BY: G. LAROCHE	CHECKED BY: W. LAMMER
APPROACH SLAB DETAILS 43N	SHEET 98 OF 166

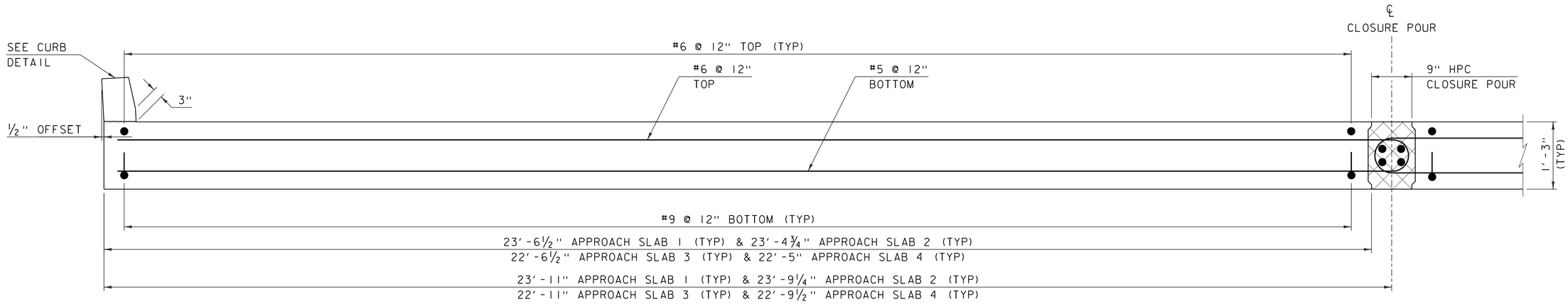

SECTION A-A

SCALE 1" = 1'-0"

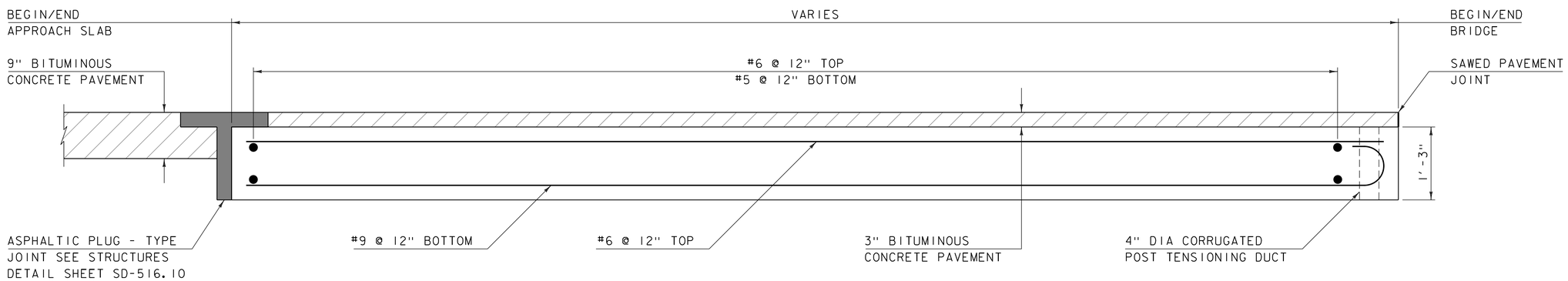

SECTION B-B

SCALE 1" = 1'-0"

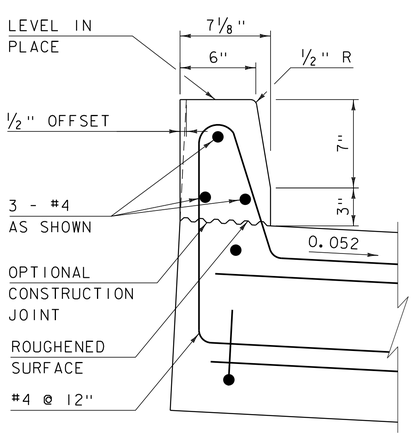

CURB DETAIL

SCALE 2" = 1'-0"

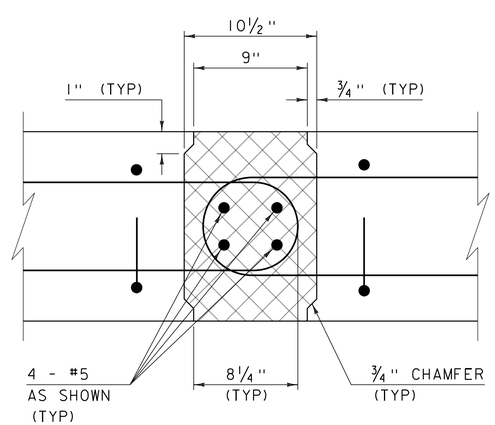

JOINT DETAIL SECTION

SCALE 2" = 1'-0"

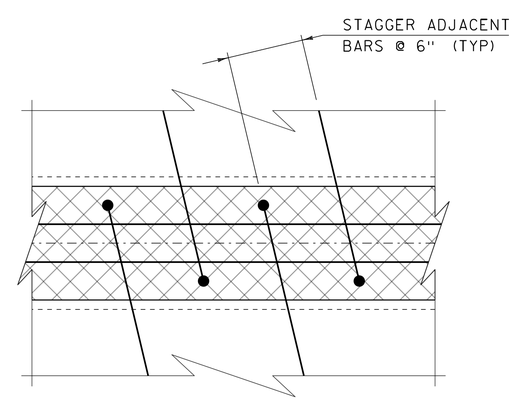

JOINT DETAIL PLAN

SCALE 2" = 1'-0"

NOTE:

NF = NEAR FACE
FF = FAR FACE
EF = EACH FACE
▲ = CUT TO FIT IN FIELD
3" CLEAR, UNLESS OTHERWISE SPECIFIED ON THE PLANS.
2'-2" BAR LAP UNLESS OTHERWISE SPECIFIED ON THE PLANS.

NOTES:

1) ALL APPROACH SLAB REINFORCING STEEL SHALL BE LEVEL II OR HIGHER.

PROJECT NAME: HARTFORD	
PROJECT NUMBER: IM 091-2(79)	
FILE NAME: s12al32apslabs_43S.dgn	PLOT DATE: 15-DEC-2014
PROJECT LEADER: K. HIGGINS	DRAWN BY: K. FRIEDLAND
DESIGNED BY: G. LAROCHE	CHECKED BY: W. LAMMER
APPROACH SLAB DETAILS	SHEET 99 OF 166

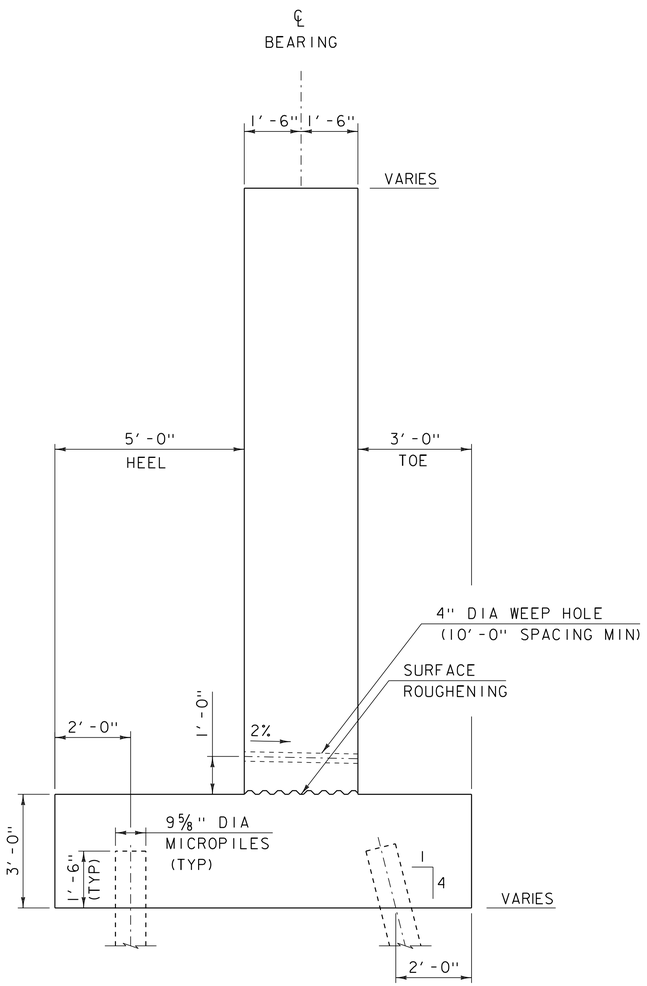

ABUTMENT 1-3 TYPICAL

SCALE ½" = 1'-0"

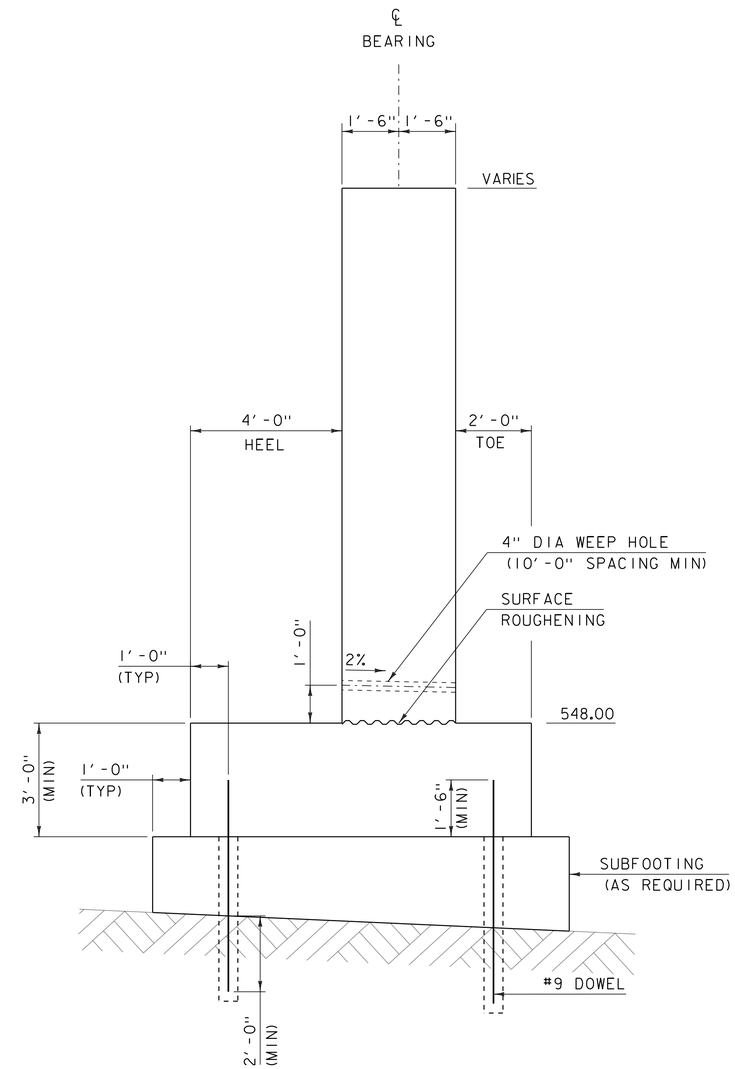

ABUTMENT 4 TYPICAL

SCALE ½" = 1'-0"

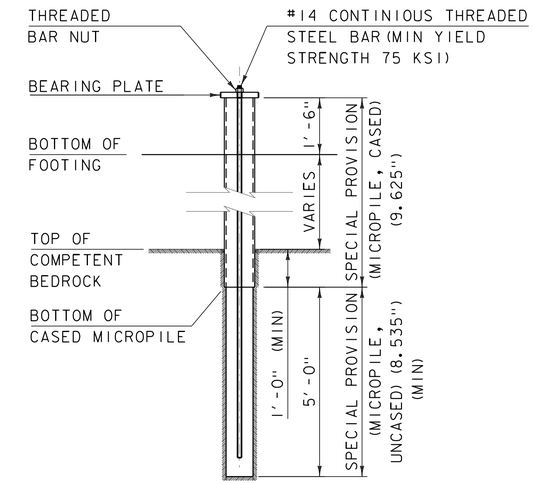

PLUMB MICROPILE ELEVATION

SCALE: ½" = 1'-0"

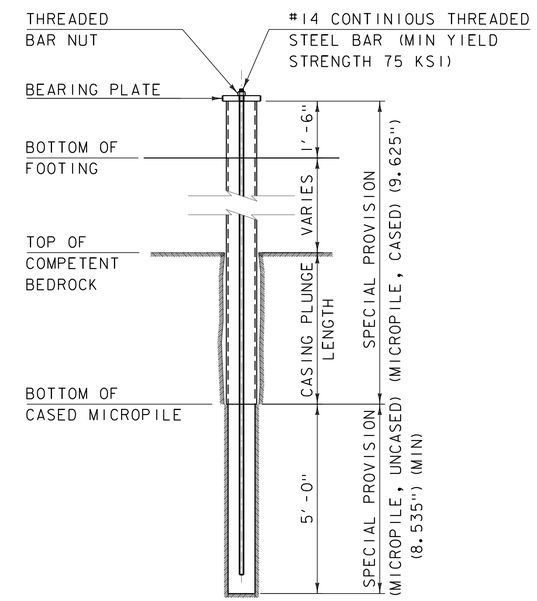

BATTERED MICROPILE ELEVATION

SCALE: ½" = 1'-0"

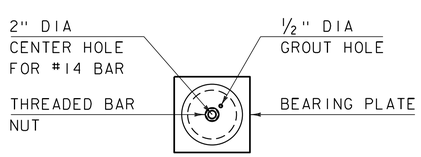

MICROPILE PLAN

SCALE: 1" = 1'-0"

	PILE TYPE	CASING PLUNGE LENGTH IN COMPETENT ROCK	CASING SEATED INTO COMPETENT ROCK	BEARING PLATE SIZE
ABUT 1	FRONT ROW (BATTERED)	3.0 FT	N/A	1¾" X 1' X 1'
	BACK ROW (PLUMB)	N/A	1 FT	
ABUT 2	FRONT ROW (BATTERED)	4.5 FT	N/A	1¾" X 1'1" X 1'1"
	BACK ROW (PLUMB)	N/A	1 FT	
ABUT 3	FRONT ROW (BATTERED)	4.0 FT	N/A	1¾" X 1' X 1'
	BACK ROW (PLUMB)	N/A	1 FT	

PROJECT NAME: HARTFORD
PROJECT NUMBER: IM 091-2(79)

FILE NAME: s12a132sub_abl.dgn
PROJECT LEADER: K. HIGGINS
DESIGNED BY: G. LAROCHE
ABUTMENT TYPICALS

PLOT DATE: 15-DEC-2014
DRAWN BY: J. SALVATORI
CHECKED BY: W. LAMMER
SHEET 100 OF 166

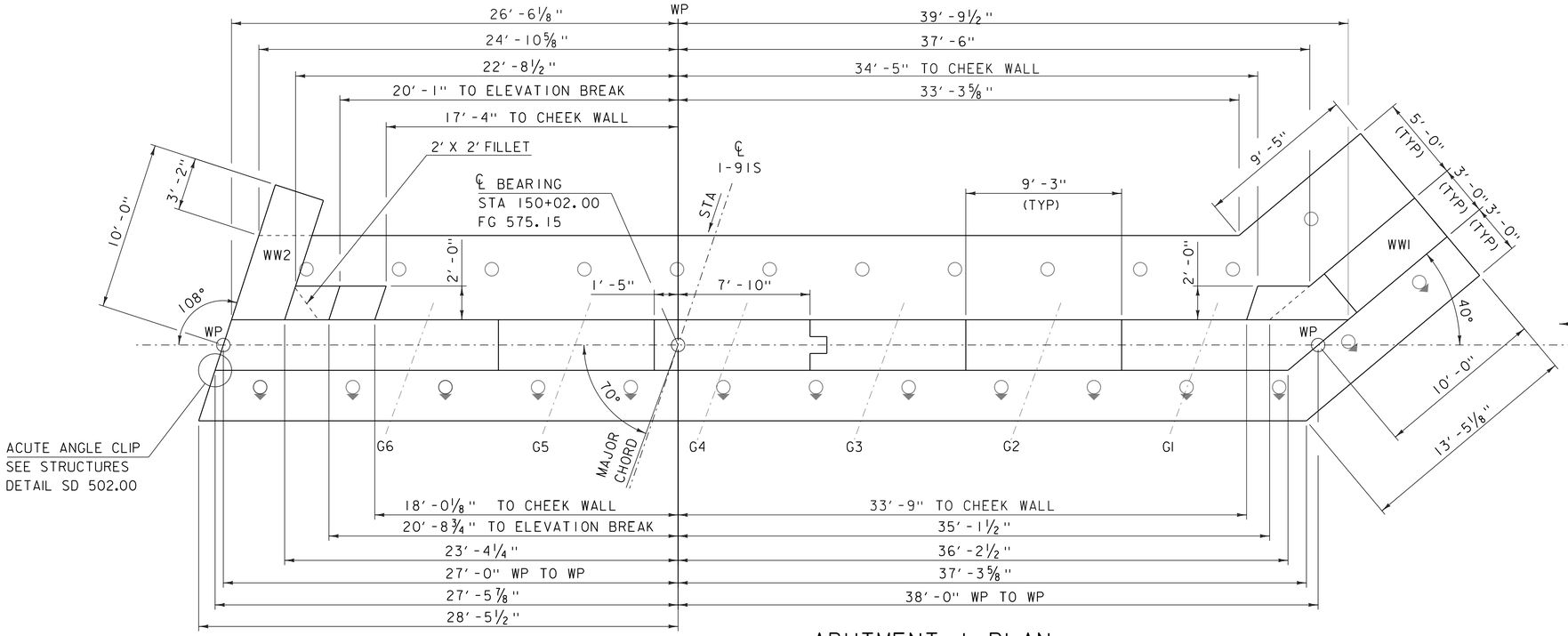

ABUTMENT 1 PLAN

SCALE: 1/4" = 1'-0"

BRIDGE SEAT ELEVATIONS

GIRDER	ELEVATION
G1	570.81
G2	570.37
G3	569.92
G4	569.47
G5	569.03
G6	568.58

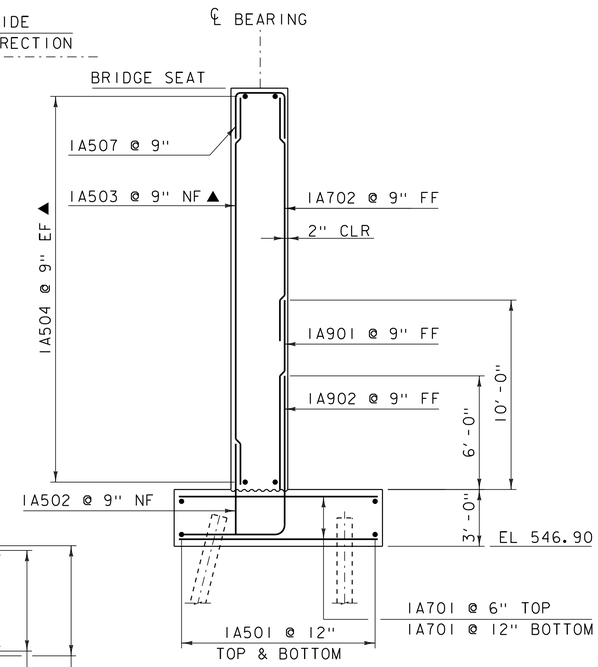

ABUTMENT 1 REINFORCING AT BRIDGE SEAT

SCALE: 1/4" = 1'-0"

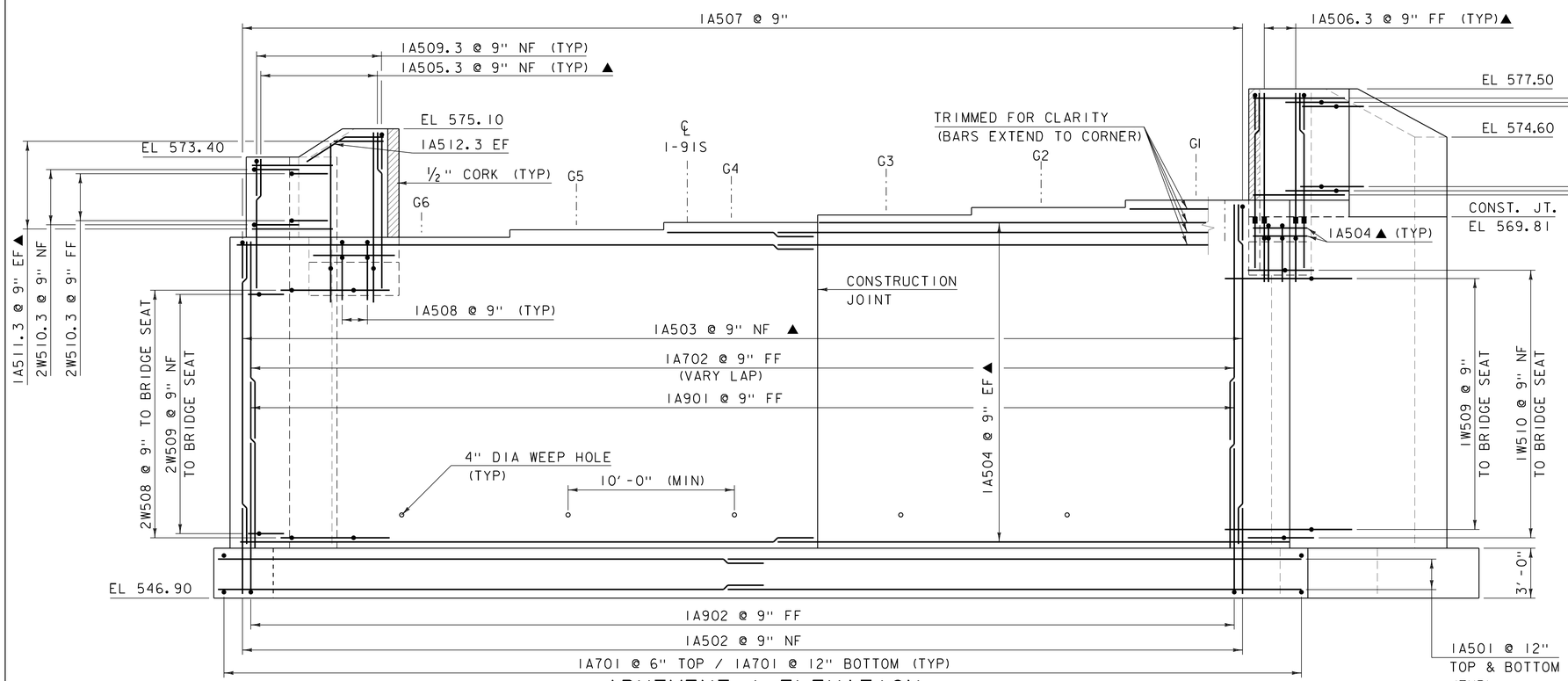

ABUTMENT 1 ELEVATION

SCALE: 1/4" = 1'-0"

NOTE:

NF = NEAR FACE
FF = FAR FACE
EF = EACH FACE
▲ = CUT TO FIT IN FIELD
▬ = MECHANICAL CONNECTOR
3" CLEAR, UNLESS OTHERWISE SPECIFIED ON THE PLANS.
2'-2" LAP FOR #5 BAR
2'-7" LAP FOR #6 BAR
3'-5" LAP FOR #7 BAR
4'-6" LAP FOR #8 BAR

PROJECT NAME: HARFORD
PROJECT NUMBER: IM 091-2(79)

FILE NAME: s12a132sub_abl.dgn
PROJECT LEADER: K. HIGGINS
DESIGNED BY: G. LAROCHE
ABUTMENT 1

PLOT DATE: 15-DEC-2014
DRAWN BY: J. SALVATORI
CHECKED BY: G. LAROCHE
SHEET 101 OF 166

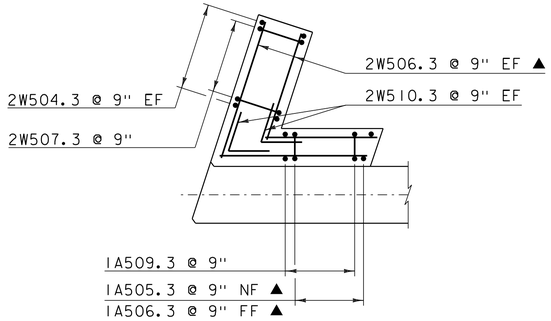

WINGWALL 2 CORNER DETAIL ABOVE BRIDGE SEAT

SCALE: 1/4" = 1'-0"

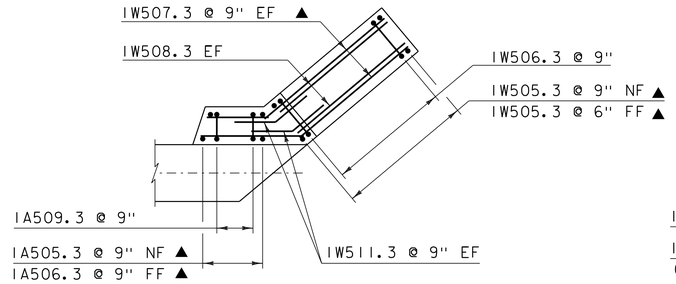

WINGWALL 1 CORNER DETAIL ABOVE BRIDGE SEAT

SCALE: 1/4" = 1'-0"

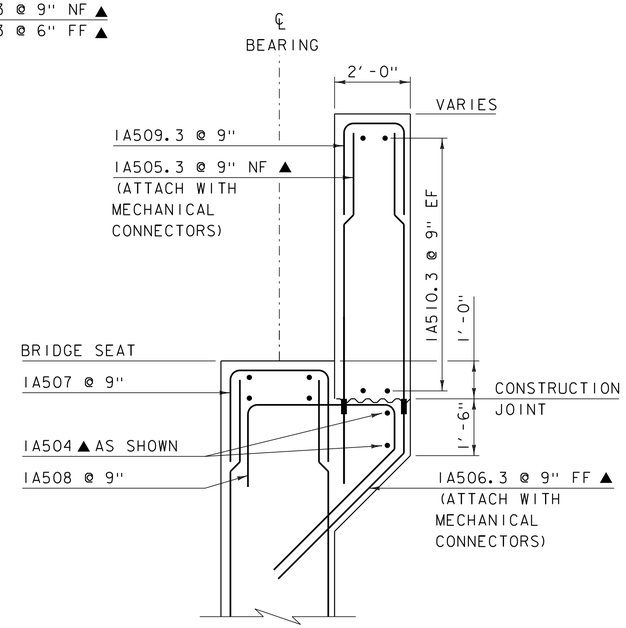

ABUTMENT 1 CHEEK WALL REINFORCING @ WW 1

SCALE: 1/2" = 1'-0"

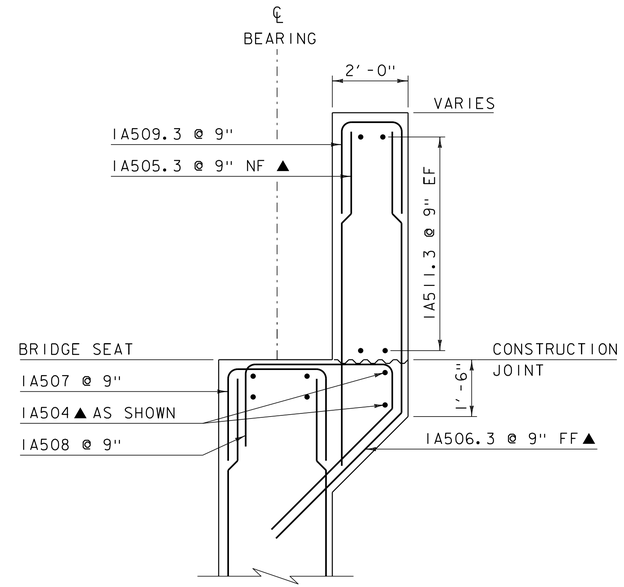

ABUTMENT 1 CHEEK WALL REINFORCING @ WW 2

SCALE: 1/4" = 1'-0"

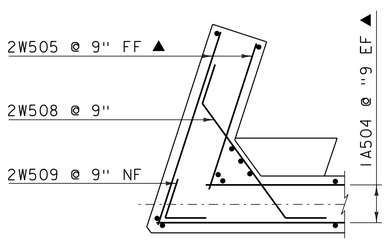

WINGWALL 2 CORNER DETAIL BELOW BRIDGE SEAT

SCALE: 1/4" = 1'-0"

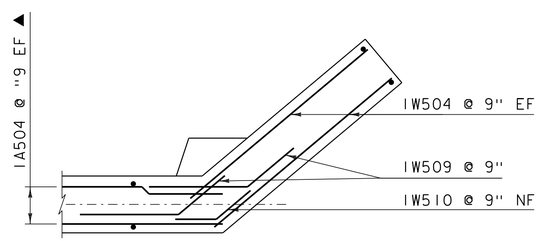

WINGWALL 1 CORNER DETAIL BELOW BRIDGE SEAT

SCALE: 1/4" = 1'-0"

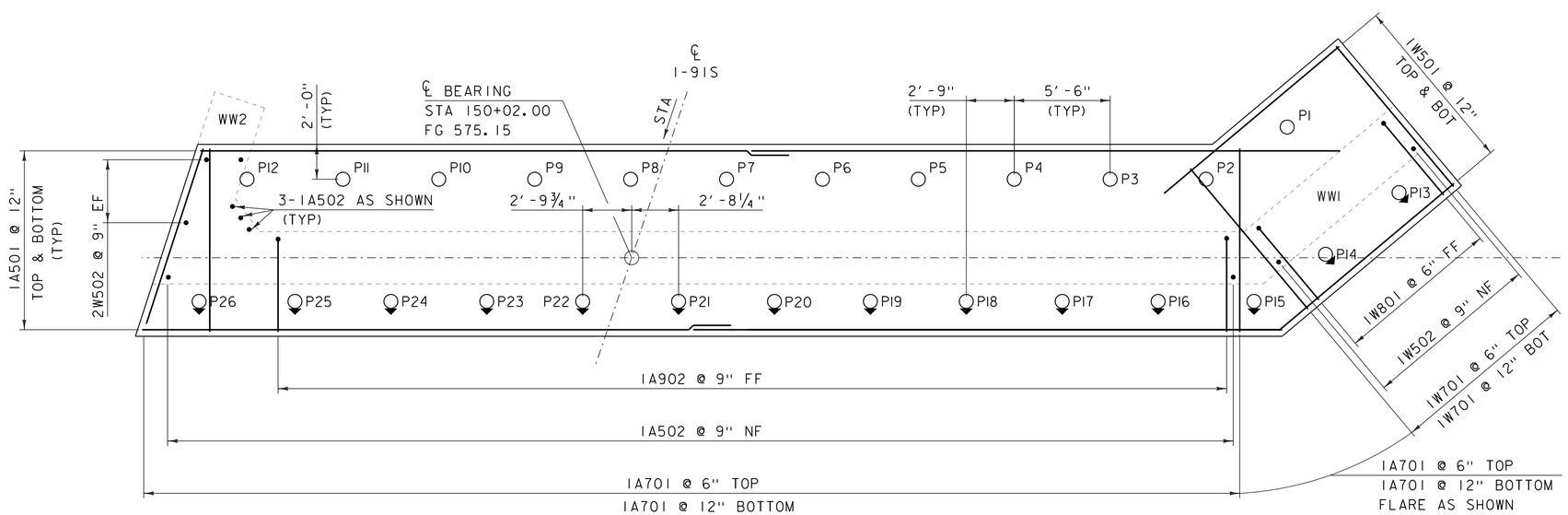

ABUTMENT 1 FOOTING PLAN

SCALE: 1/4" = 1'-0"

NOTE:

NF = NEAR FACE
FF = FAR FACE
EF = EACH FACE
▲ = CUT TO FIT IN FIELD
▬ = MECHANICAL CONNECTOR
3" CLEAR, UNLESS OTHERWISE SPECIFIED ON THE PLANS.
2'-2" LAP FOR #5 BAR
2'-7" LAP FOR #6 BAR
3'-5" LAP FOR #7 BAR
4'-6" LAP FOR #8 BAR

PROJECT NAME: HARFORD	
PROJECT NUMBER: IM 091-2(79)	
FILE NAME: s12a132sub_abl.dgn	PLOT DATE: 15-DEC-2014
PROJECT LEADER: K. HIGGINS	DRAWN BY: J. SALVATORI
DESIGNED BY: G. LAROCHE	CHECKED BY: G. LAROCHE
ABUTMENT 1 FOOTING	SHEET 102 OF 166

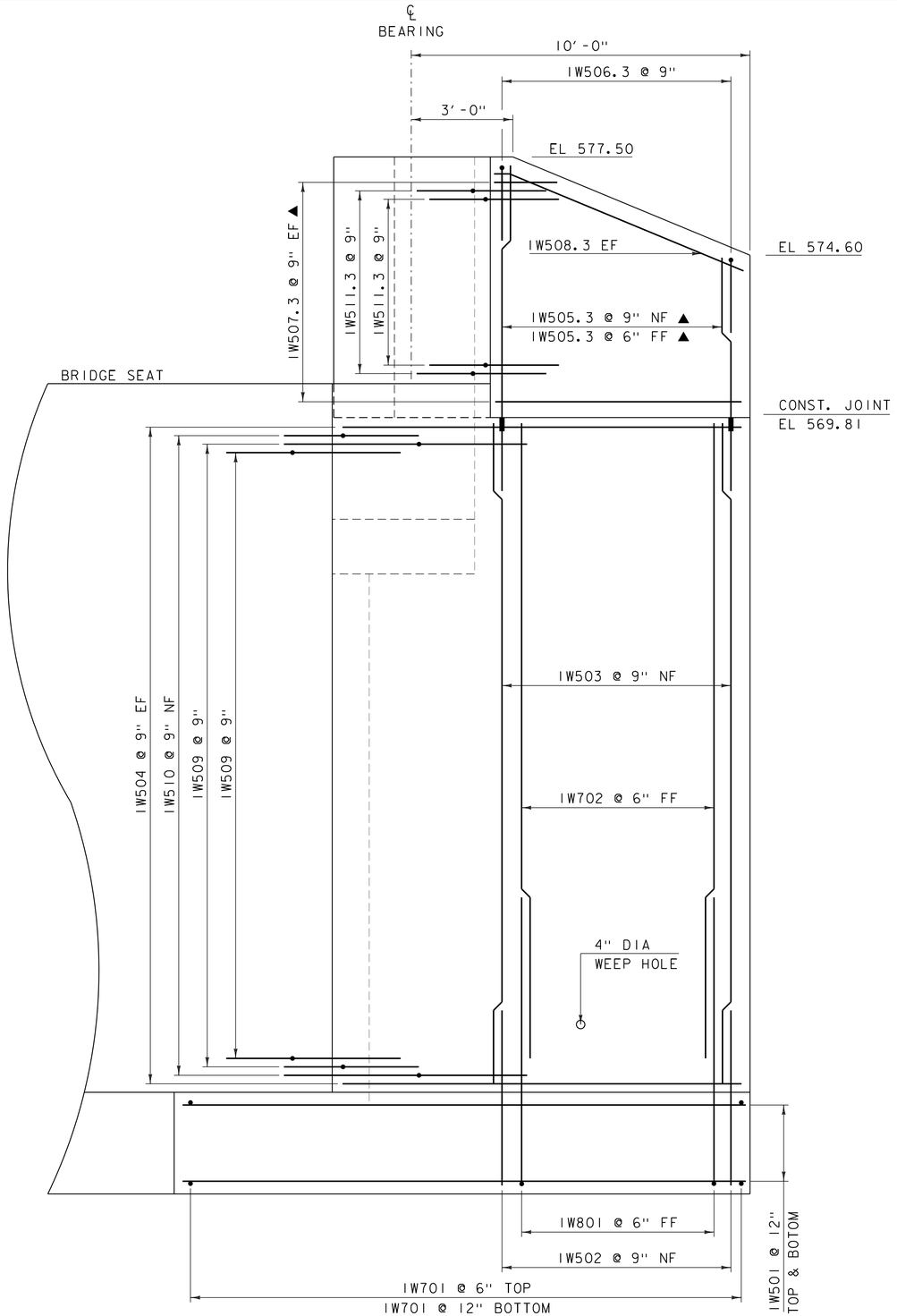

WINGWALL 1 ELEVATION

SCALE: ½" = 1'-0"

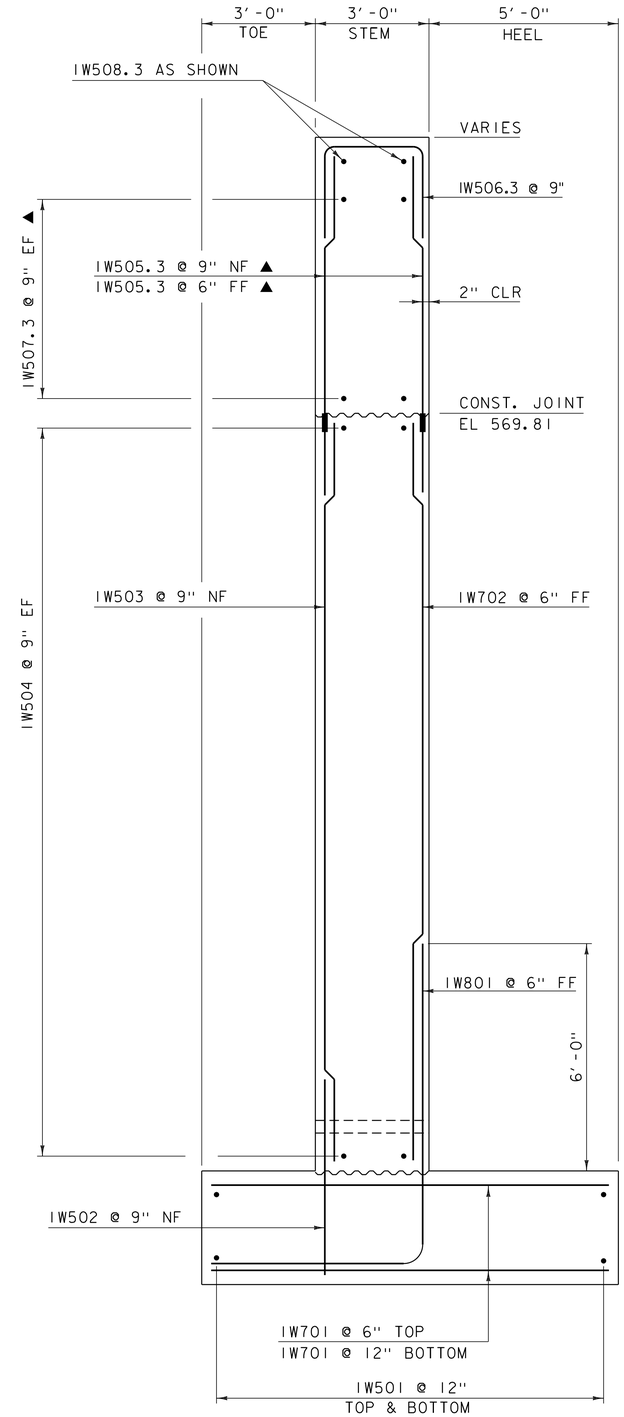

WINGWALL 1 TYPICAL

SCALE: ½" = 1'-0"

NOTE:

NF = NEAR FACE
FF = FAR FACE
EF = EACH FACE
▲ = CUT TO FIT IN FIELD
▬ = MECHANICAL CONNECTOR
3" CLEAR, UNLESS OTHERWISE SPECIFIED ON THE PLANS.
2'-2" LAP FOR #5 BAR
2'-7" LAP FOR #6 BAR
3'-5" LAP FOR #7 BAR
4'-6" LAP FOR #8 BAR

PROJECT NAME: HARTFORD	
PROJECT NUMBER: IM 091-2(79)	
FILE NAME: s12a132sub_abl.dgn	PLOT DATE: 15-DEC-2014
PROJECT LEADER: K. HIGGINS	DRAWN BY: J. SALVATORI
DESIGNED BY: G. LAROCHE	CHECKED BY: G. LAROCHE
WINGWALL 1 DETAILS	SHEET 103 OF 166

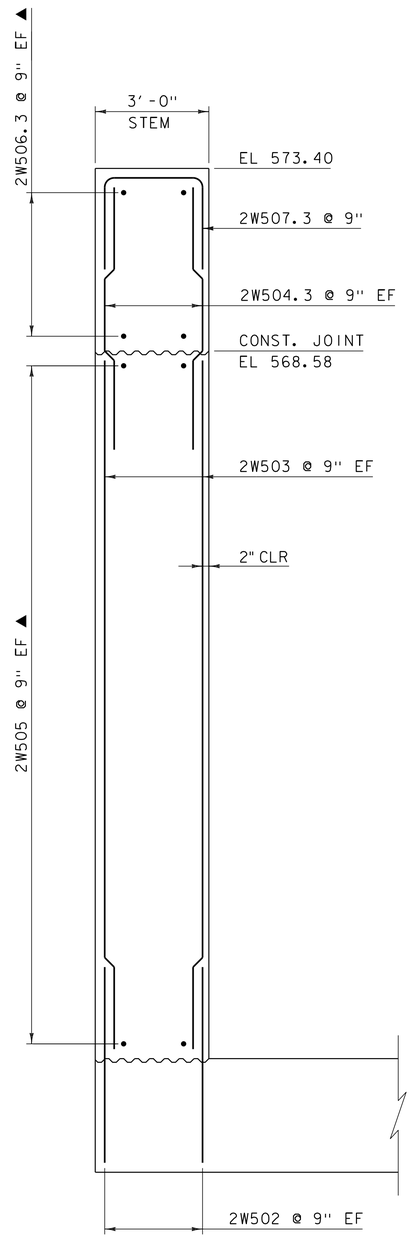

WINGWALL 2 TYPICAL

SCALE: ½" = 1'-0"

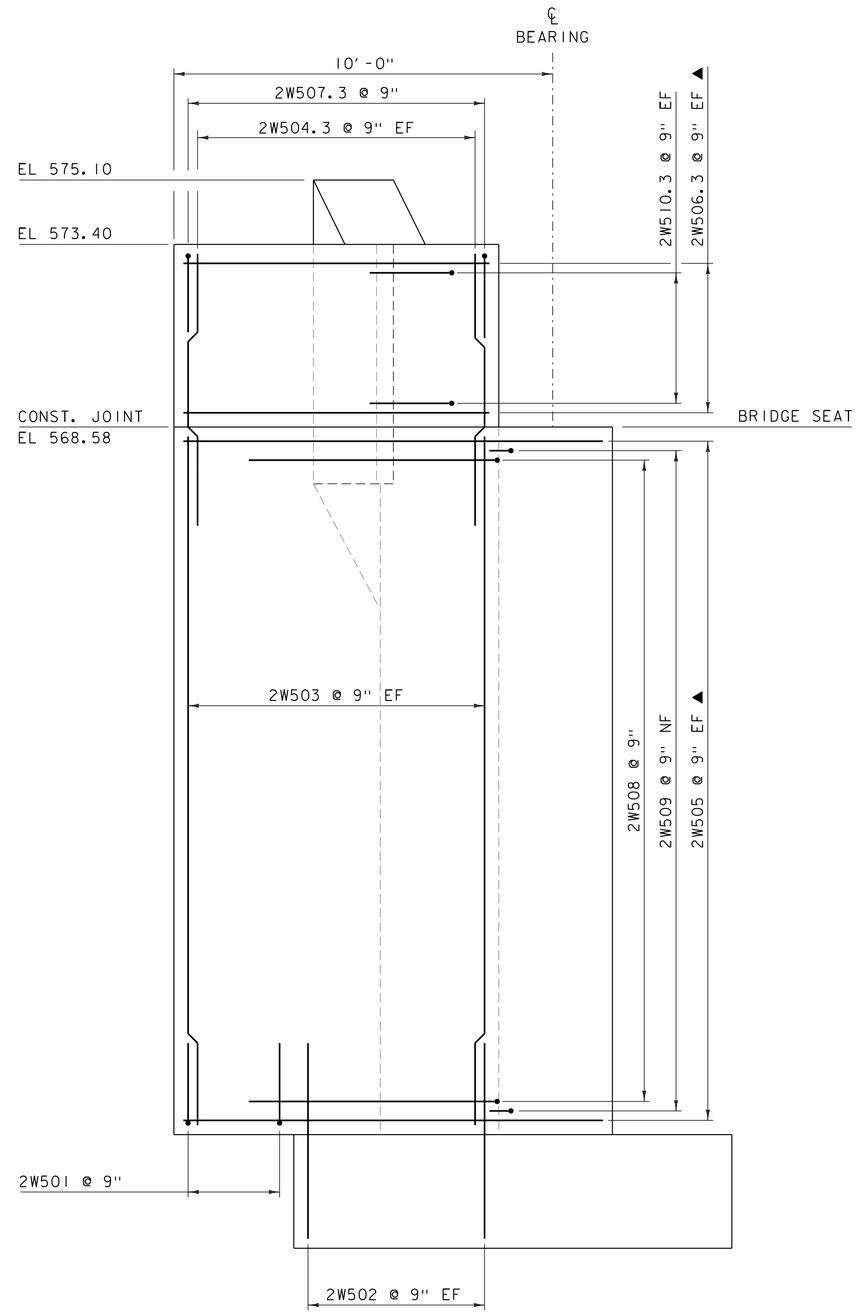

WINGWALL 2 ELEVATION

SCALE: ½" = 1'-0"

NOTE:

NF = NEAR FACE
FF = FAR FACE
EF = EACH FACE
▲ = CUT TO FIT IN FIELD
▬ = MECHANICAL CONNECTOR
3" CLEAR, UNLESS OTHERWISE SPECIFIED ON THE PLANS.
2'-2" LAP FOR #5 BAR
2'-7" LAP FOR #6 BAR
3'-5" LAP FOR #7 BAR
4'-6" LAP FOR #8 BAR

PROJECT NAME: HARTFORD	
PROJECT NUMBER: IM 091-2(79)	
FILE NAME: s12a132sub_abl.dgn	PLOT DATE: 15-DEC-2014
PROJECT LEADER: K. HIGGINS	DRAWN BY: J. SALVATORI
DESIGNED BY: G. LAROCHE	CHECKED BY: G. LAROCHE
WINGWALL 2 DETAILS	SHEET 104 OF 166

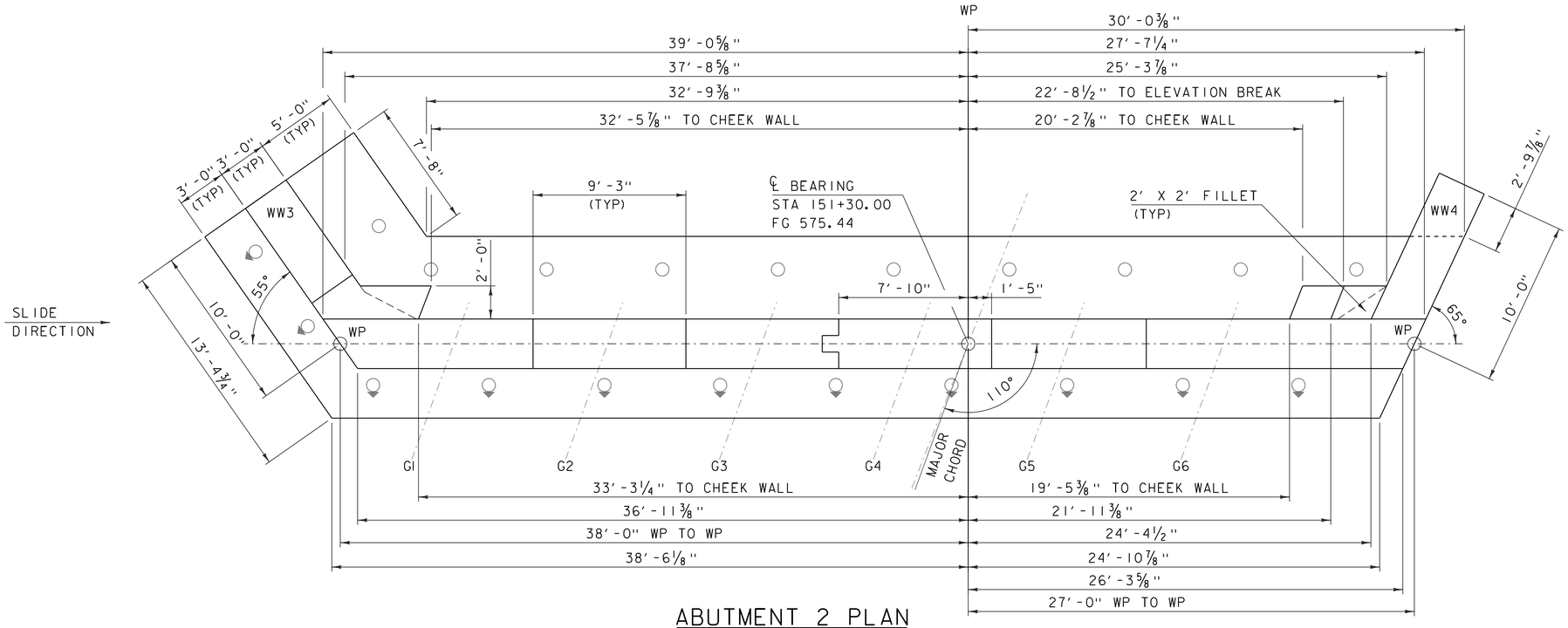

ABUTMENT 2 PLAN

SCALE: 1/4" = 1'-0"

BRIDGE SEAT ELEVATIONS

GIRDER	ELEVATION
G1	571.11
G2	570.66
G3	570.22
G4	569.77
G5	569.32
G6	568.87

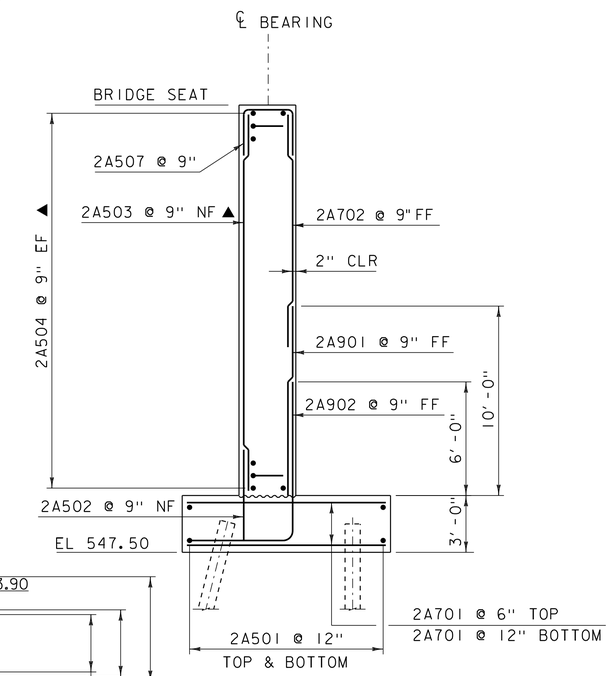

ABUTMENT 2 REINFORCING AT BRIDGE SEAT

SCALE: 1/4" = 1'-0"

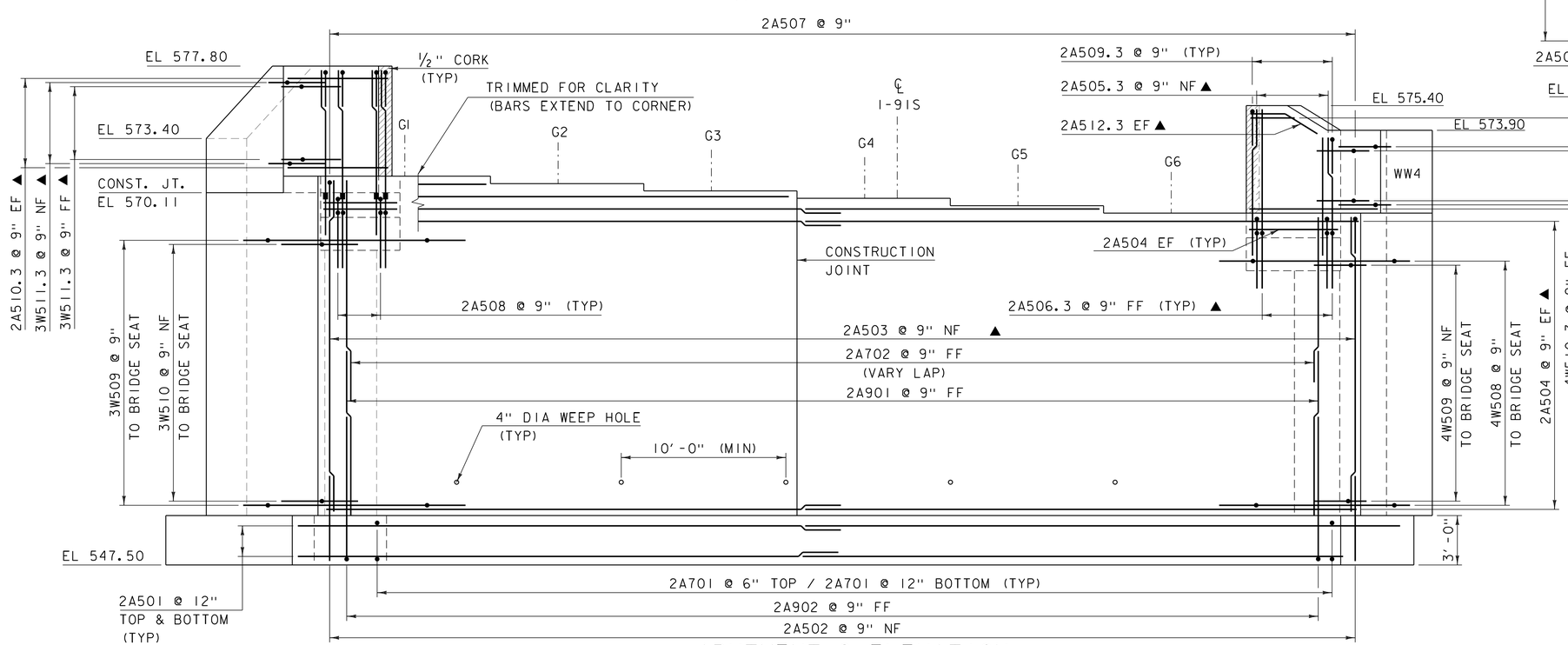

ABUTMENT 2 ELEVATION

SCALE: 1/4" = 1'-0"

NOTE:

NF = NEAR FACE
FF = FAR FACE
EF = EACH FACE
▲ = CUT TO FIT IN FIELD
▬ = MECHANICAL CONNECTOR
3" CLEAR, UNLESS OTHERWISE SPECIFIED ON THE PLANS.
2'-2" LAP FOR #5 BAR
2'-7" LAP FOR #6 BAR
3'-5" LAP FOR #7 BAR
4'-6" LAP FOR #8 BAR

PROJECT NAME: HARTFORD
PROJECT NUMBER: IM 091-2(79)

FILE NAME: s12a132sub_ab2
PROJECT LEADER: K. HIGGINS
DESIGNED BY: G. LAROCHE
ABUTMENT 2

PLOT DATE: 15-DEC-2014
DRAWN BY: J. SALVATORI
CHECKED BY: G. LAROCHE
SHEET 105 OF 166

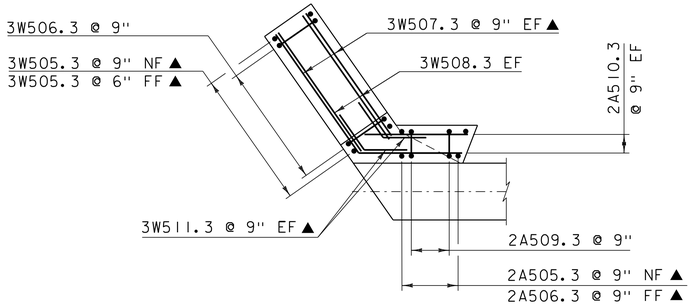

WINGWALL 3 CORNER DETAIL
ABOVE BRIDGE SEAT

SCALE: 1/4" = 1'-0"

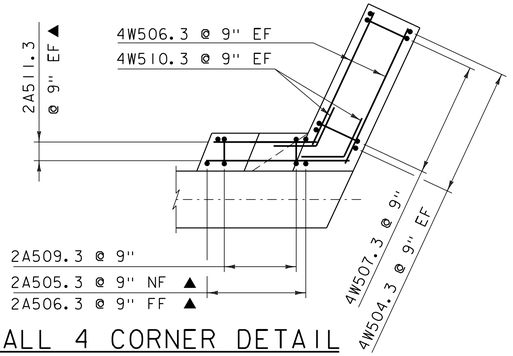

WINGWALL 4 CORNER DETAIL
ABOVE BRIDGE SEAT

SCALE: 1/4" = 1'-0"

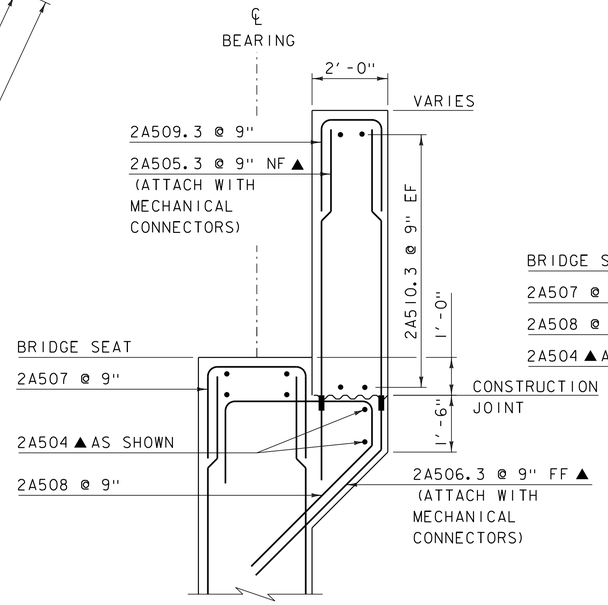

ABUTMENT 2 CHEEK WALL
REINFORCING @ WW3

SCALE: 1/4" = 1'-0"

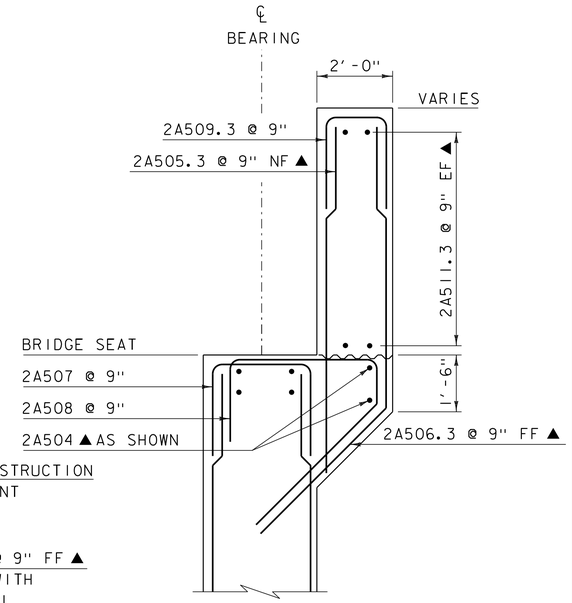

ABUTMENT 2 CHEEK WALL
REINFORCING @ WW4

SCALE: 1/4" = 1'-0"

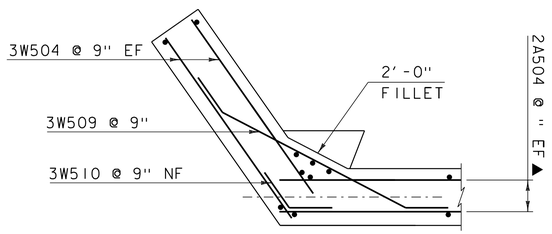

WINGWALL 3 CORNER DETAIL
BELOW BRIDGE SEAT

SCALE: 1/4" = 1'-0"

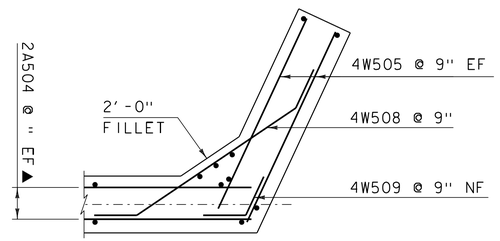

WINGWALL 4 CORNER DETAIL
BELOW BRIDGE SEAT

SCALE: 1/4" = 1'-0"

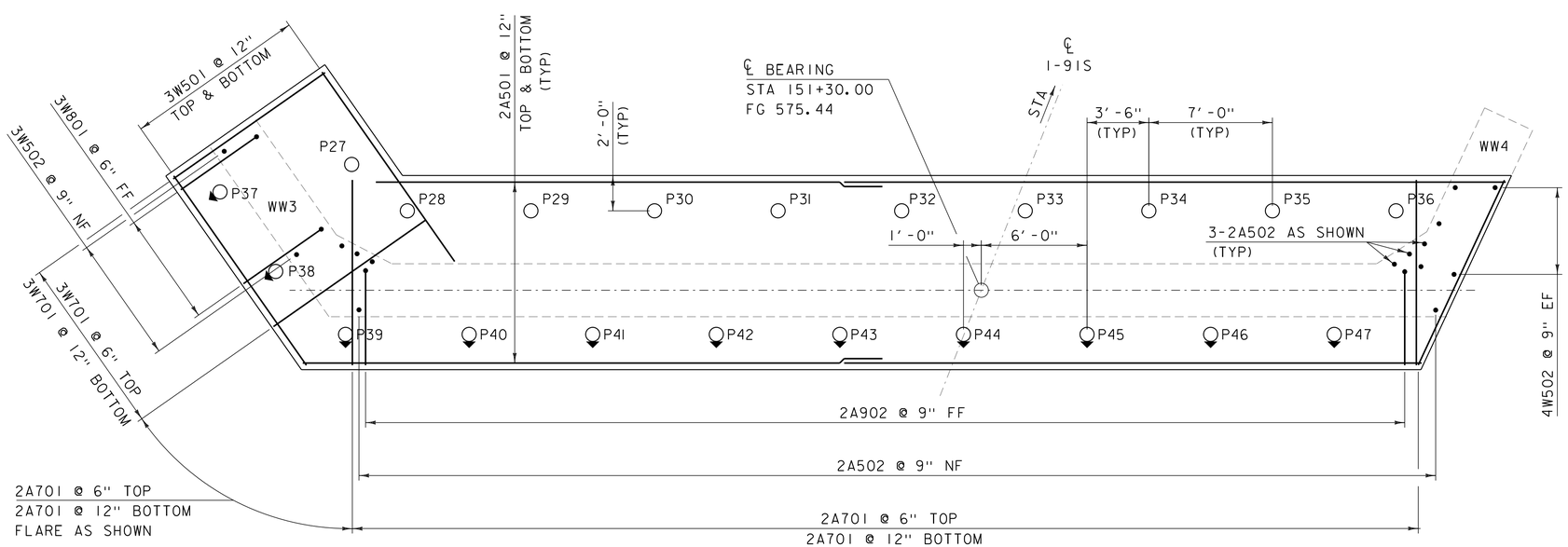

ABUTMENT 2
FOOTING PLAN

SCALE: 1/4" = 1'-0"

NOTE:

NF = NEAR FACE
FF = FAR FACE
EF = EACH FACE
▲ = CUT TO FIT IN FIELD
▬ = MECHANICAL CONNECTOR
3" CLEAR, UNLESS OTHERWISE SPECIFIED ON THE PLANS.
2'-2" LAP FOR #5 BAR
2'-7" LAP FOR #6 BAR
3'-5" LAP FOR #7 BAR
4'-6" LAP FOR #8 BAR

PROJECT NAME: HARTFORD	
PROJECT NUMBER: IM 091-2(79)	
FILE NAME: s12a132sub_ab2	PLOT DATE: 15-DEC-2014
PROJECT LEADER: K. HIGGINS	DRAWN BY: J. SALVATORI
DESIGNED BY: G. LAROCHE	CHECKED BY: G. LAROCHE
ABUTMENT 2 FOOTING	SHEET 106 OF 166

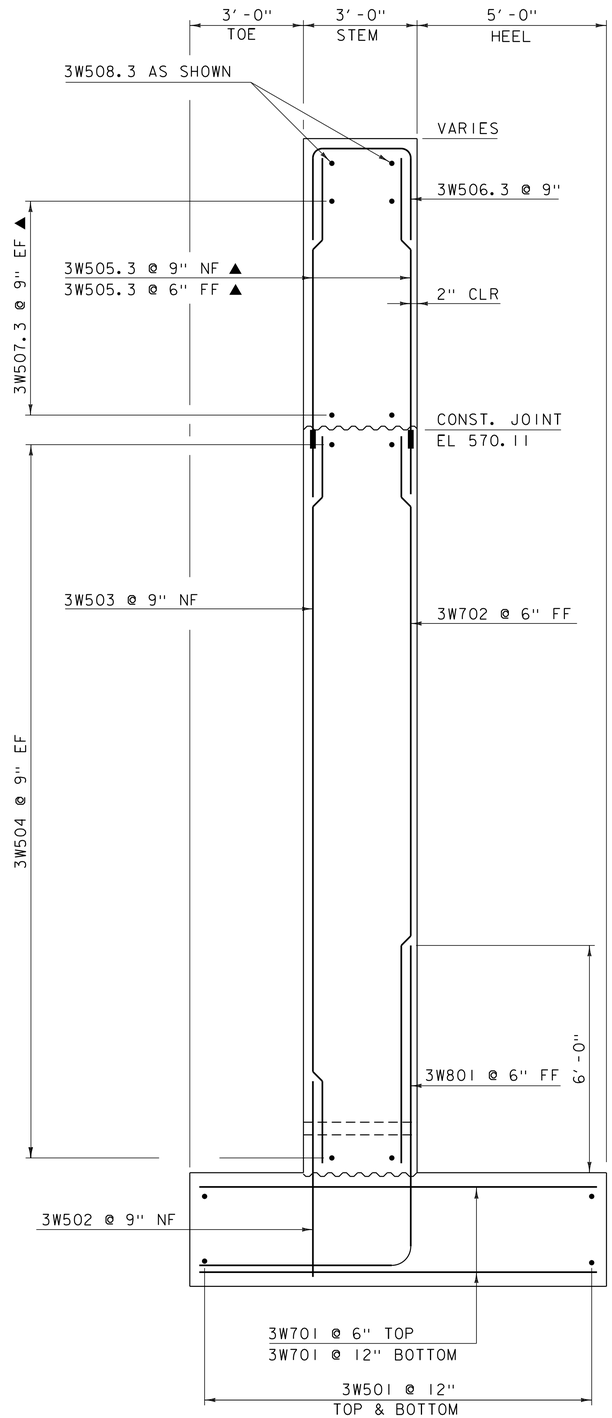

WINGWALL 3 TYPICAL

SCALE: ½" = 1'-0"

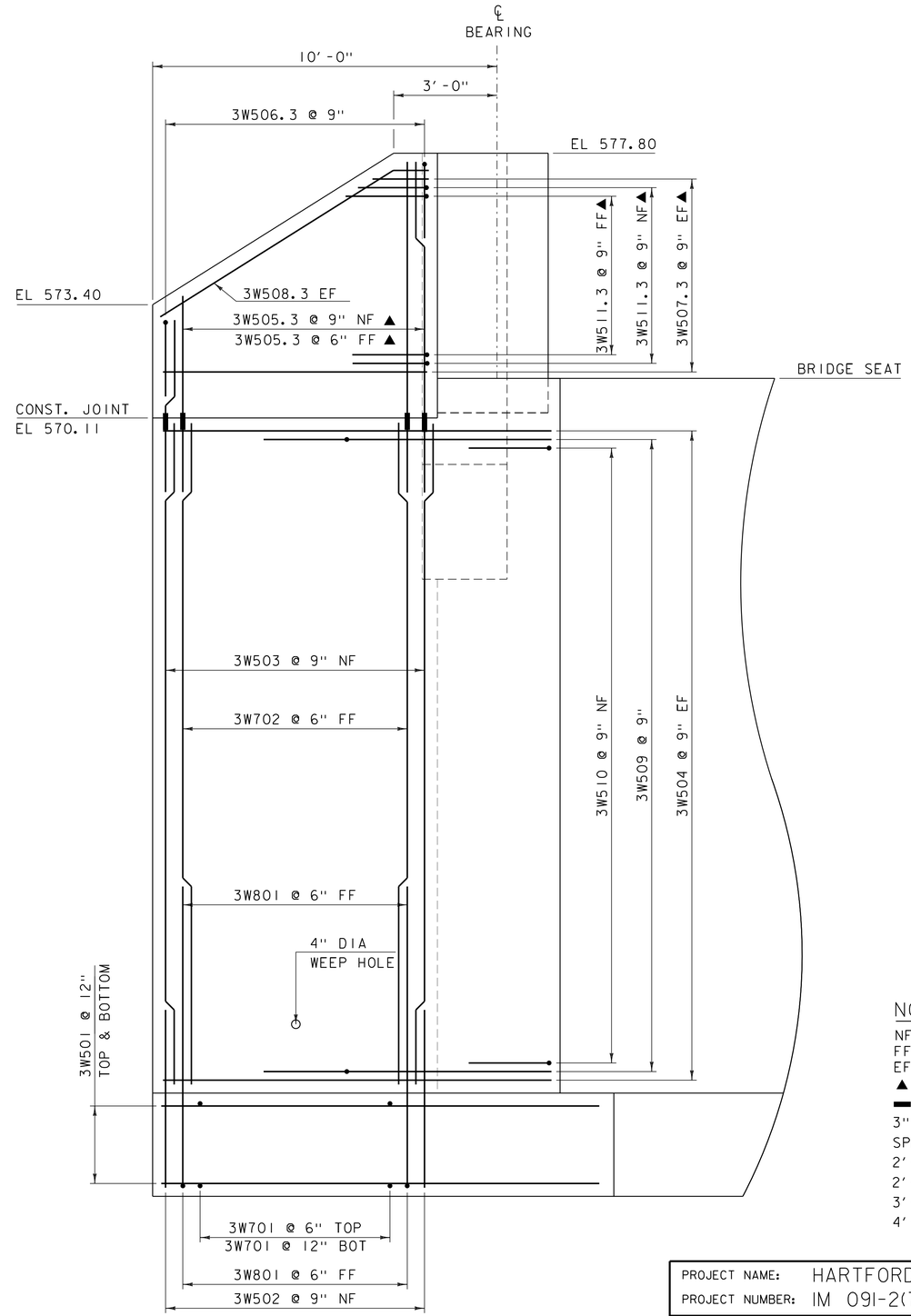

WINGWALL 3 ELEVATION

SCALE: ½" = 1'-0"

NOTE:

NF = NEAR FACE
FF = FAR FACE
EF = EACH FACE
▲ = CUT TO FIT IN FIELD
▬ = MECHANICAL CONNECTOR
3" CLEAR, UNLESS OTHERWISE SPECIFIED ON THE PLANS.
2'-2" LAP FOR #5 BAR
2'-7" LAP FOR #6 BAR
3'-5" LAP FOR #7 BAR
4'-6" LAP FOR #8 BAR

PROJECT NAME: HARTFORD	
PROJECT NUMBER: IM 091-2(79)	
FILE NAME: s12a132sub_ab2	PLOT DATE: 15-DEC-2014
PROJECT LEADER: K. HIGGINS	DRAWN BY: J. SALVATORI
DESIGNED BY: G. LAROCHE	CHECKED BY: G. LAROCHE
WINGWALL 3 DETAILS	SHEET 107 OF 166

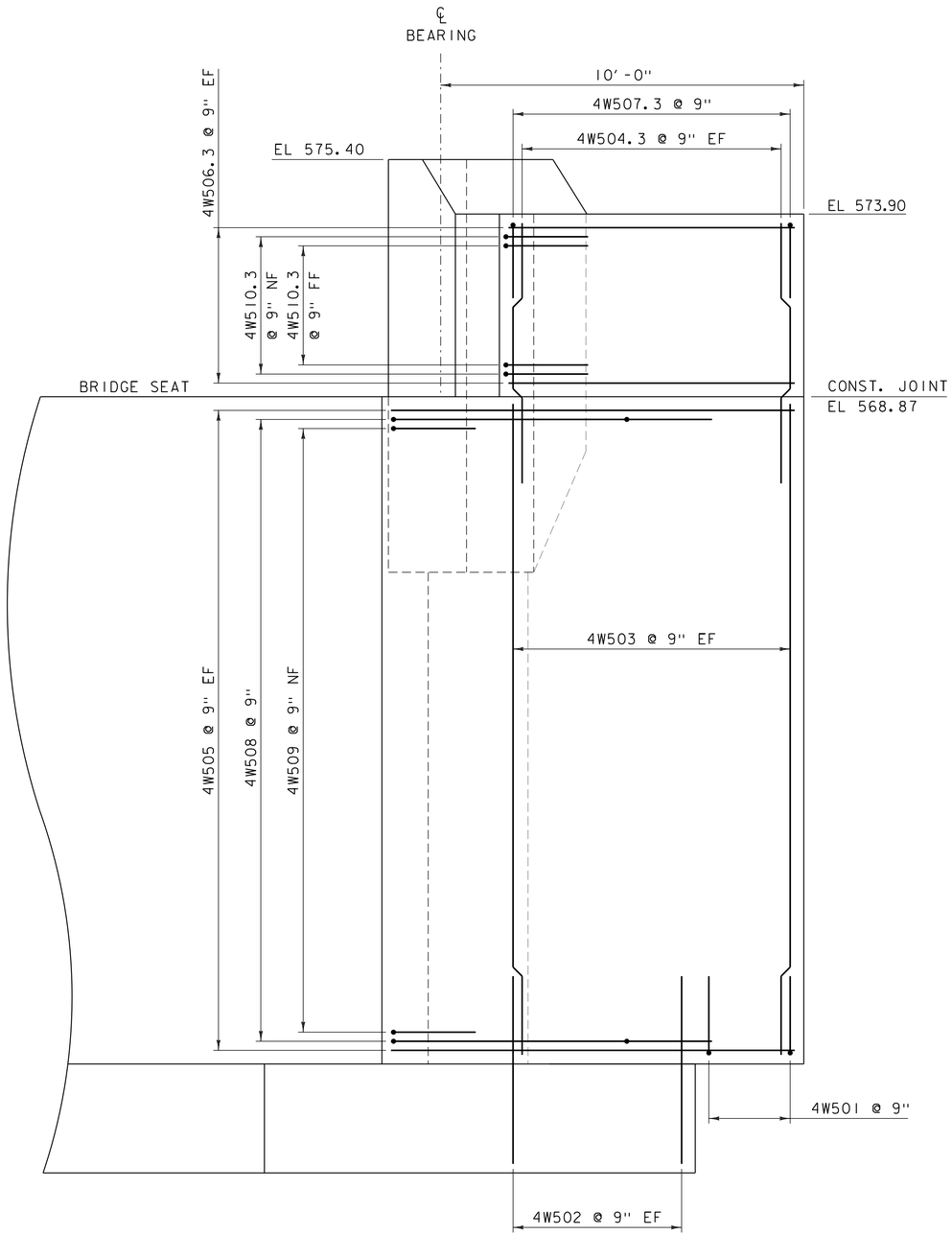

WINGWALL 4 ELEVATION

SCALE: ½" = 1'-0"

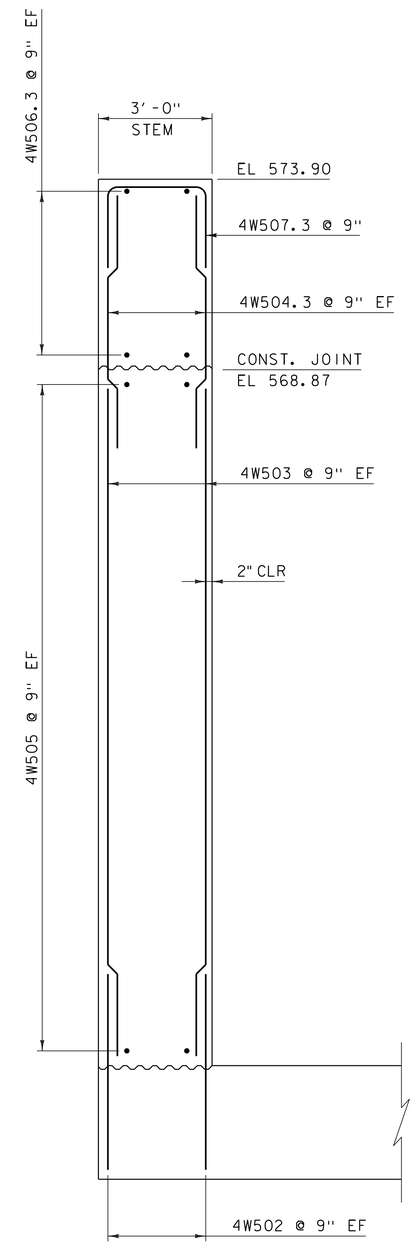

WINGWALL 4 TYPICAL OVER FOOTING

SCALE: ½" = 1'-0"

NOTE:

NF = NEAR FACE
FF = FAR FACE
EF = EACH FACE
▲ = CUT TO FIT IN FIELD
▬ = MECHANICAL CONNECTOR
3" CLEAR, UNLESS OTHERWISE SPECIFIED ON THE PLANS.
2'-2" LAP FOR #5 BAR
2'-7" LAP FOR #6 BAR
3'-5" LAP FOR #7 BAR
4'-6" LAP FOR #8 BAR

PROJECT NAME: HARTFORD	
PROJECT NUMBER: IM 091-2(79)	
FILE NAME: s12a132sub_ab2	PLOT DATE: 15-DEC-2014
PROJECT LEADER: K. HIGGINS	DRAWN BY: J. SALVATORI
DESIGNED BY: G. LAROCHE	CHECKED BY: G. LAROCHE
WINGWALL 4 DETAILS	SHEET 108 OF 166

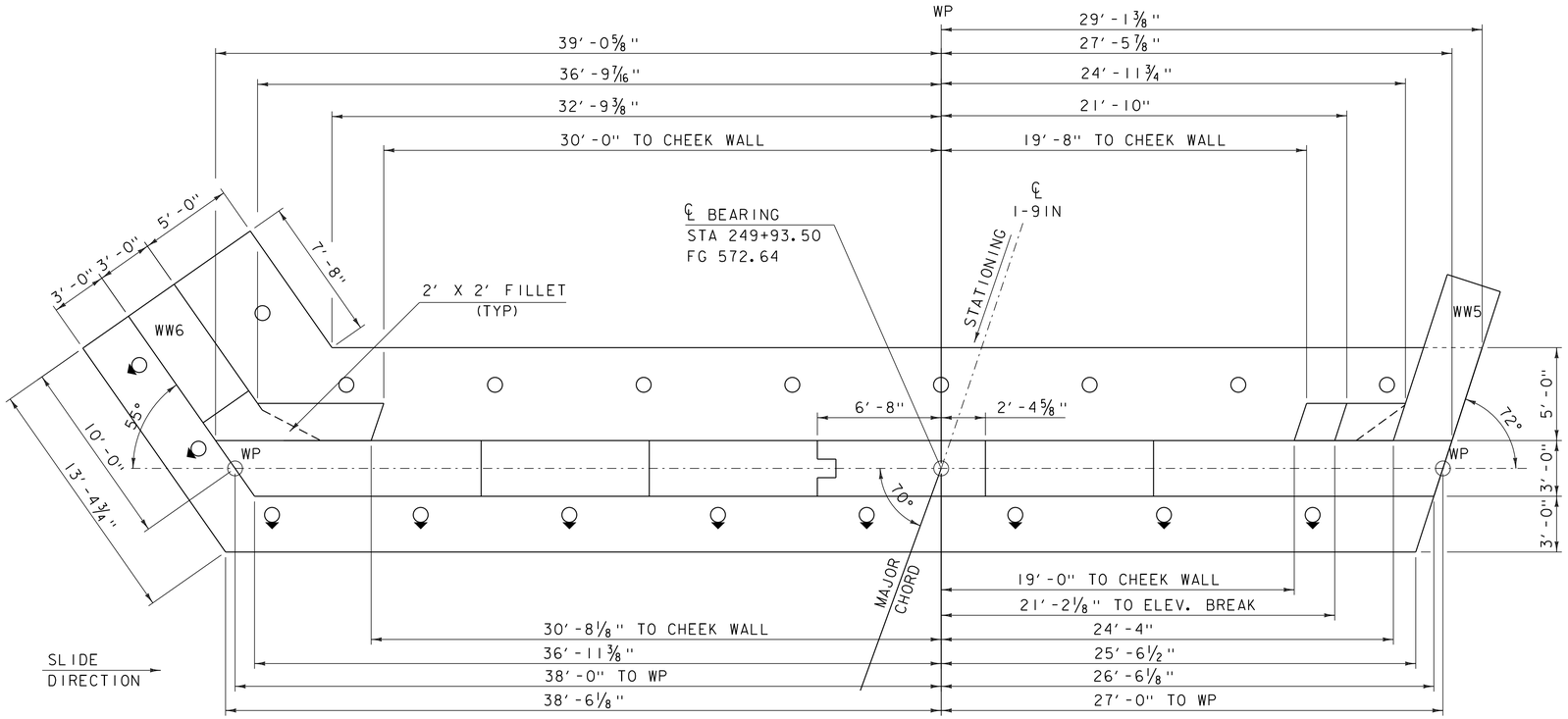

ABUTMENT 3 PLAN

SCALE: 1/4" = 1'-0"

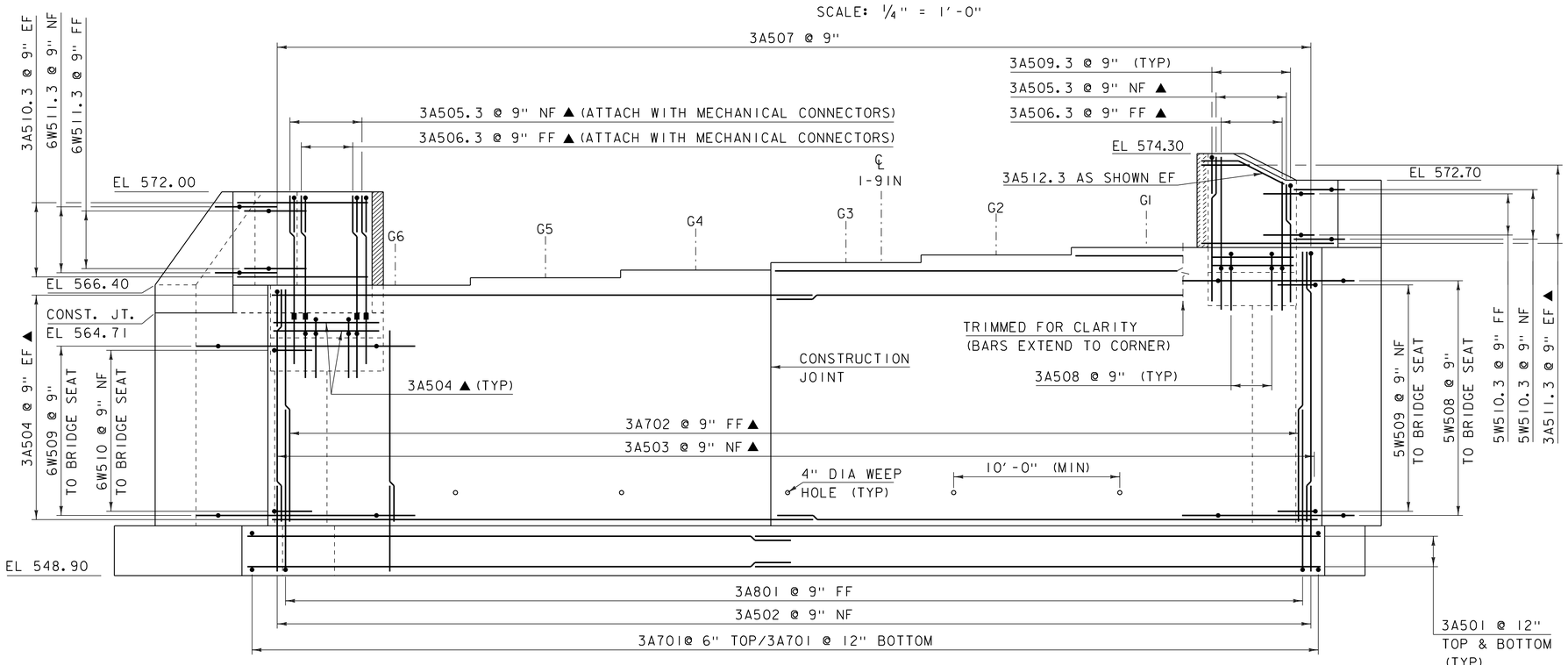

ABUTMENT 3 ELEVATION

SCALE: 1/4" = 1'-0"

BRIDGE SEAT ELEVATIONS

GIRDER	ELEVATION
G1	568.65
G2	568.20
G3	567.74
G4	567.29
G5	566.83
G6	566.38

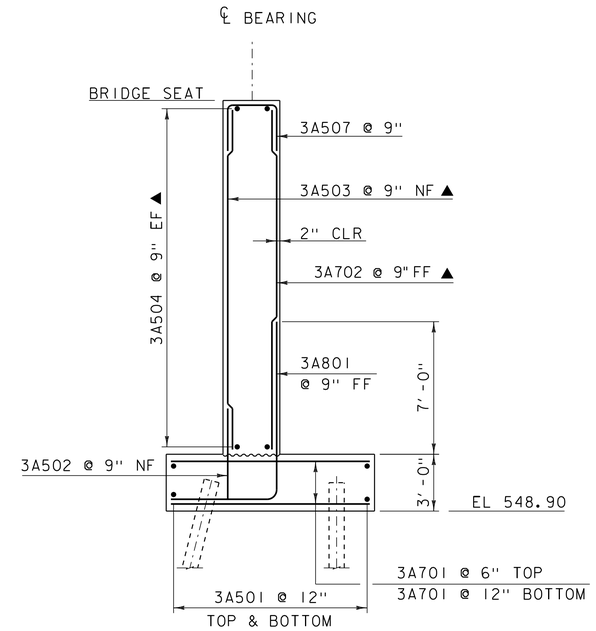

ABUTMENT 3 TYPICAL

SCALE: 1/4" = 1'-0"

NOTE:

NF = NEAR FACE
FF = FAR FACE
EF = EACH FACE
▲ = CUT TO FIT IN FIELD
▬ = MECHANICAL CONNECTOR
3" CLEAR, UNLESS OTHERWISE SPECIFIED ON THE PLANS.
2'-2" LAP FOR #5 BAR
2'-7" LAP FOR #6 BAR
3'-5" LAP FOR #7 BAR
4'-6" LAP FOR #8 BAR

PROJECT NAME: HARTFORD
PROJECT NUMBER: IM 091-2(79)

FILE NAME: s12a132sub_ab3
PROJECT LEADER: K. HIGGINS
DESIGNED BY: G. LAROCHE
ABUTMENT 3

PLOT DATE: 15-DEC-2014
DRAWN BY: J. SALVATORI
CHECKED BY: G. LAROCHE
SHEET 109 OF 166

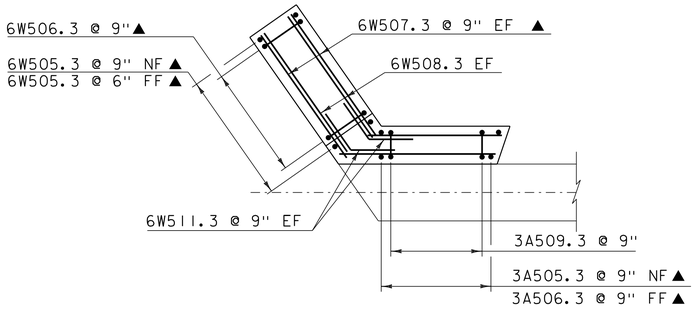

WINGWALL 6 CORNER DETAIL ABOVE BRIDGE SEAT

SCALE: 1/4" = 1'-0"

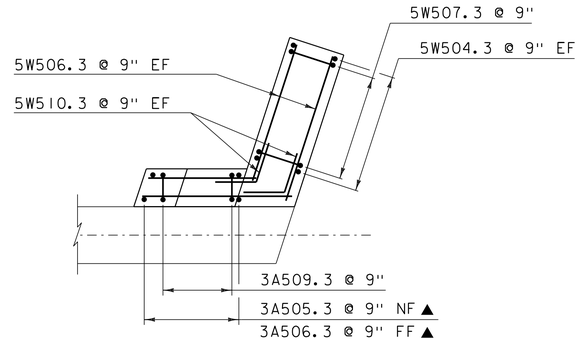

WINGWALL 5 CORNER DETAIL ABOVE BRIDGE SEAT

SCALE: 1/4" = 1'-0"

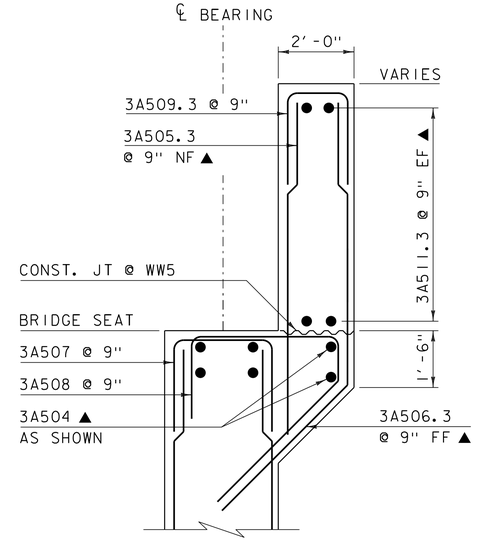

ABUTMENT 3 CHEEK WALL REINFORCING @ WW 5

SCALE: 1/2" = 1'-0"

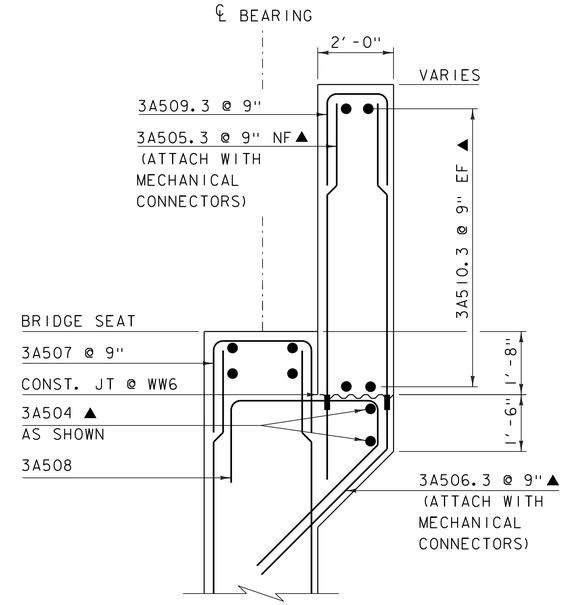

ABUTMENT 3 CHEEK WALL REINFORCING @ WW 6

SCALE: 1/2" = 1'-0"

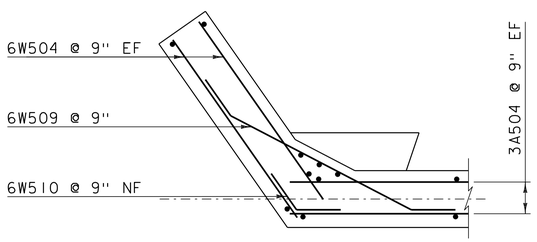

WINGWALL 6 CORNER DETAIL BELOW BRIDGE SEAT

SCALE: 1/4" = 1'-0"

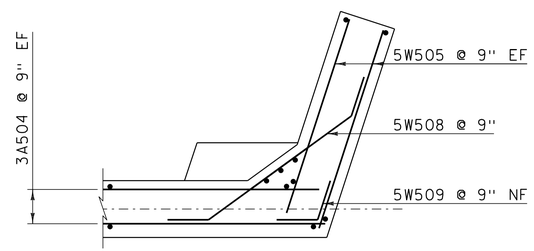

WINGWALL 5 CORNER DETAIL BELOW BRIDGE SEAT

SCALE: 1/4" = 1'-0"

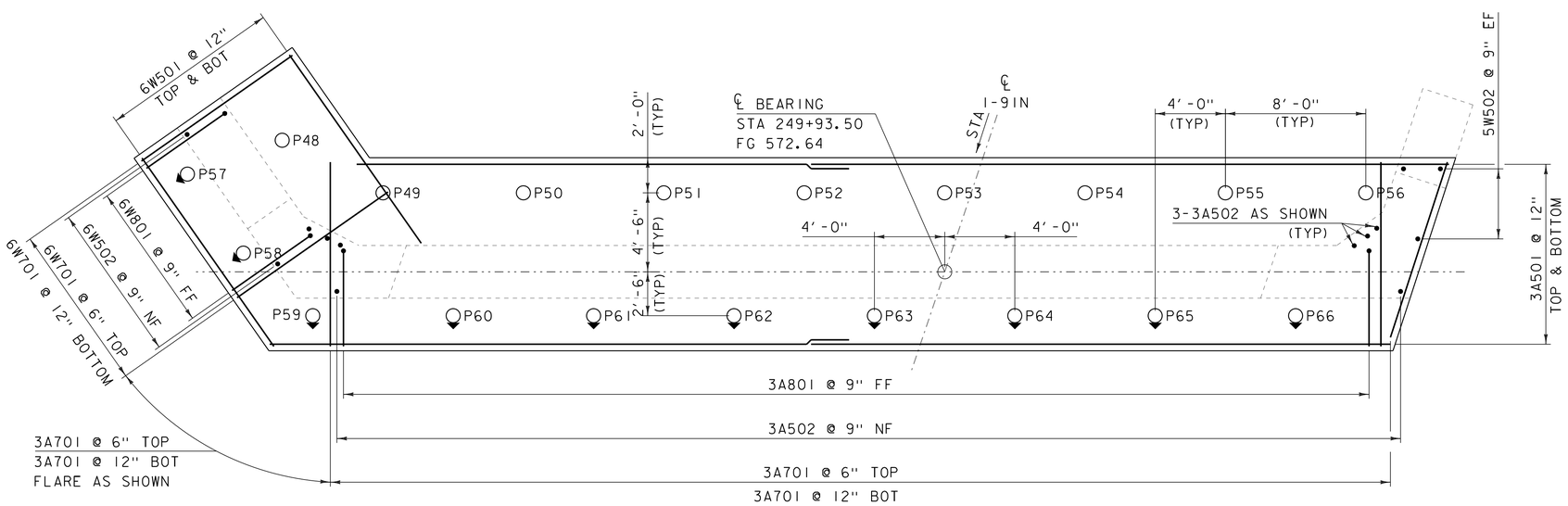

ABUTMENT 3 FOOTING PLAN

SCALE: 1/4" = 1'-0"

NOTE:

NF = NEAR FACE
FF = FAR FACE
EF = EACH FACE
▲ = CUT TO FIT IN FIELD
▬ = MECHANICAL CONNECTOR
3" CLEAR, UNLESS OTHERWISE SPECIFIED ON THE PLANS.
2'-2" LAP FOR #5 BAR
2'-7" LAP FOR #6 BAR
3'-5" LAP FOR #7 BAR
4'-6" LAP FOR #8 BAR
5'-9" LAP FOR #9 BAR

PROJECT NAME: HARTFORD	
PROJECT NUMBER: IM 091-2(79)	
FILE NAME: s12a132sub_ab3	PLOT DATE: 15-DEC-2014
PROJECT LEADER: K. HIGGINS	DRAWN BY: J. SALVATORI
DESIGNED BY: G. LAROCHE	CHECKED BY: G. LAROCHE
ABUTMENT 3 FOOTING	SHEET 110 OF 166

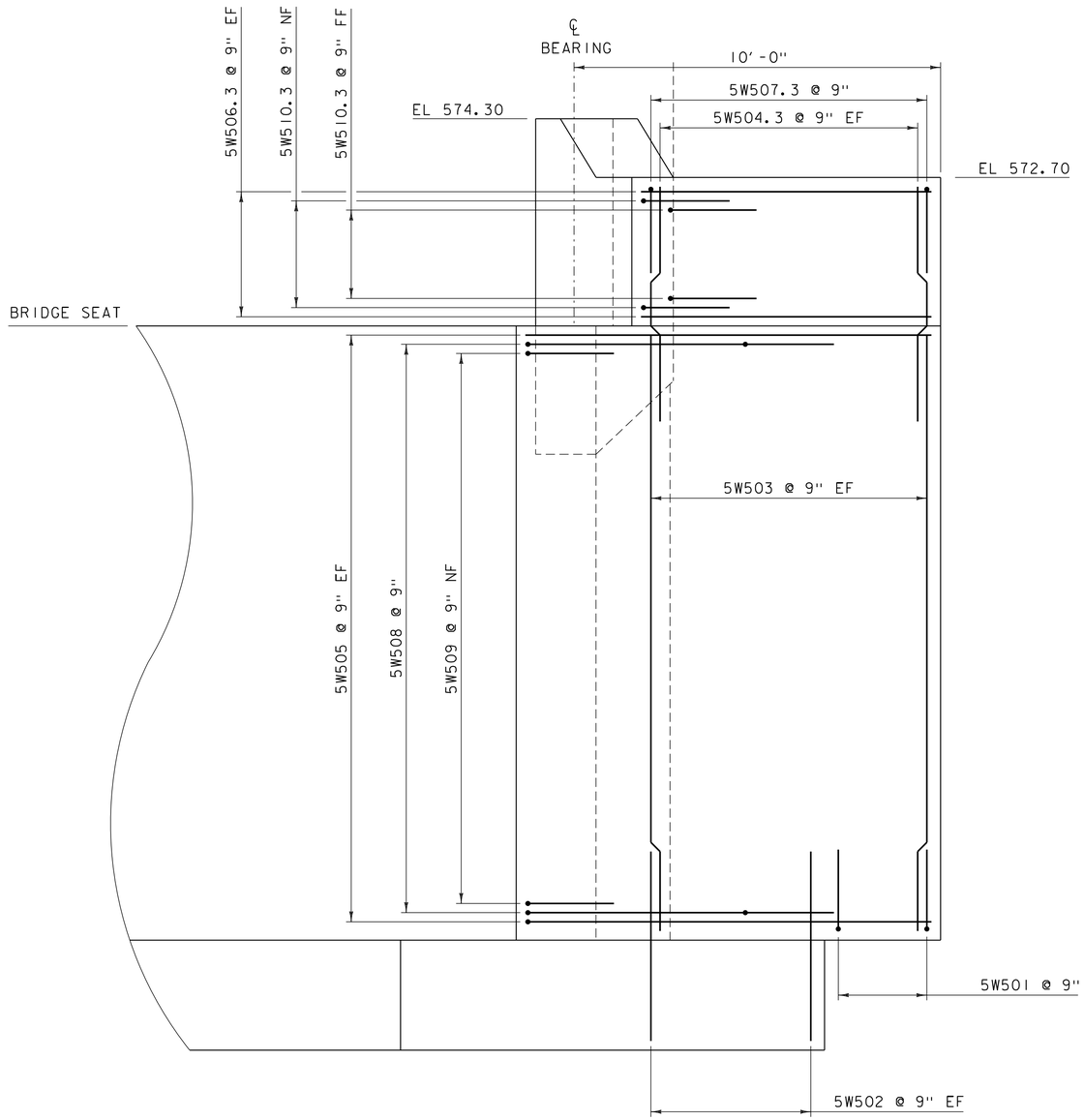

WINGWALL 5 ELEVATION

SCALE: 1/4" = 1'-0"

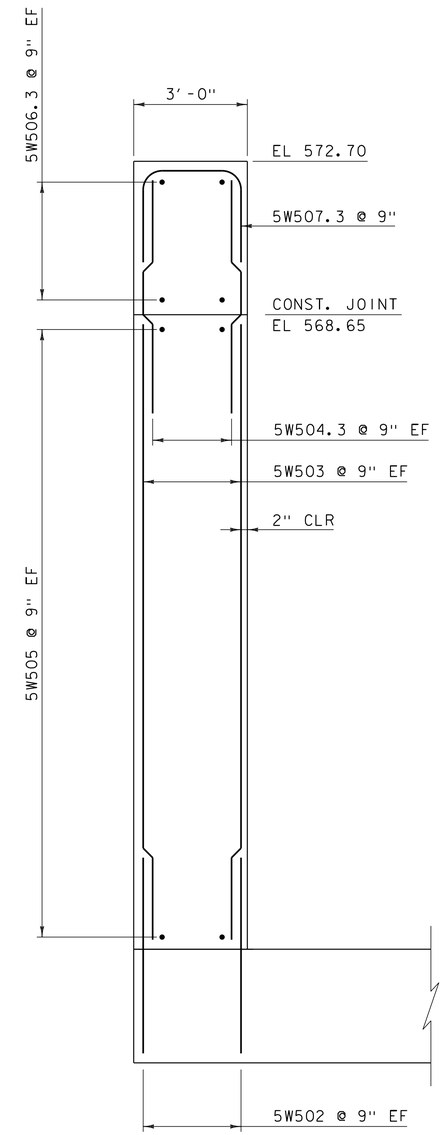

WINGWALL 5 TYPICAL

SCALE: 1/4" = 1'-0"

NOTE:

NF = NEAR FACE
FF = FAR FACE
EF = EACH FACE
▲ = CUT TO FIT IN FIELD
▬ = MECHANICAL CONNECTOR
3" CLEAR, UNLESS OTHERWISE SPECIFIED ON THE PLANS.
2'-2" LAP FOR #5 BAR
2'-7" LAP FOR #6 BAR
3'-5" LAP FOR #7 BAR
4'-6" LAP FOR #8 BAR

PROJECT NAME: HARFORD	
PROJECT NUMBER: IM 091-2(79)	
FILE NAME: s12a132sub_ab3.dgn	PLOT DATE: 15-DEC-2014
PROJECT LEADER: K. HIGGINS	DRAWN BY: J. SALVATORI
DESIGNED BY: G. LAROCHE	CHECKED BY: G. LAROCHE
WINGWALL 5 DETAILS	SHEET 111 OF 166

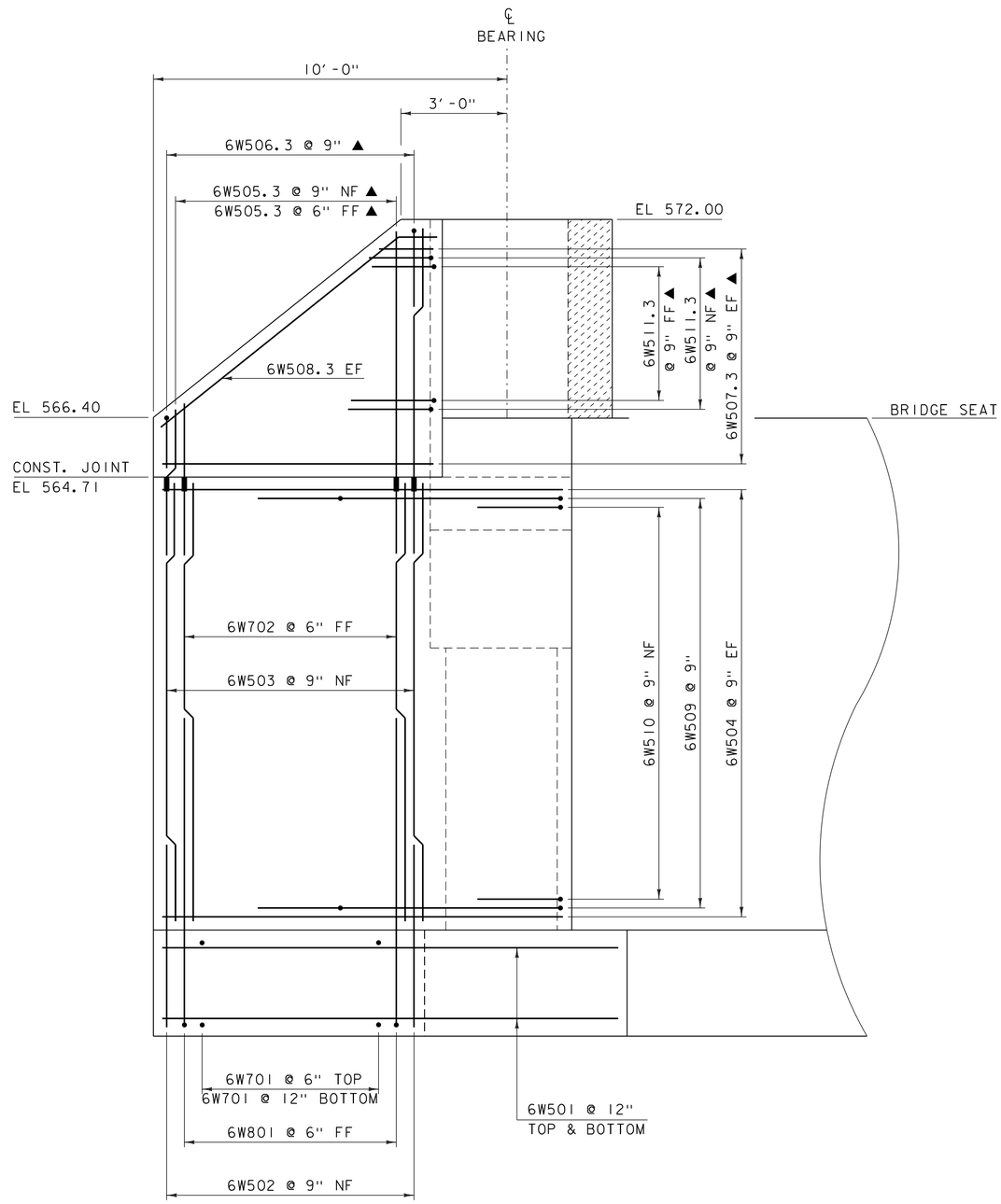

WINGWALL 6 ELEVATION

SCALE: 1/4" = 1'-0"

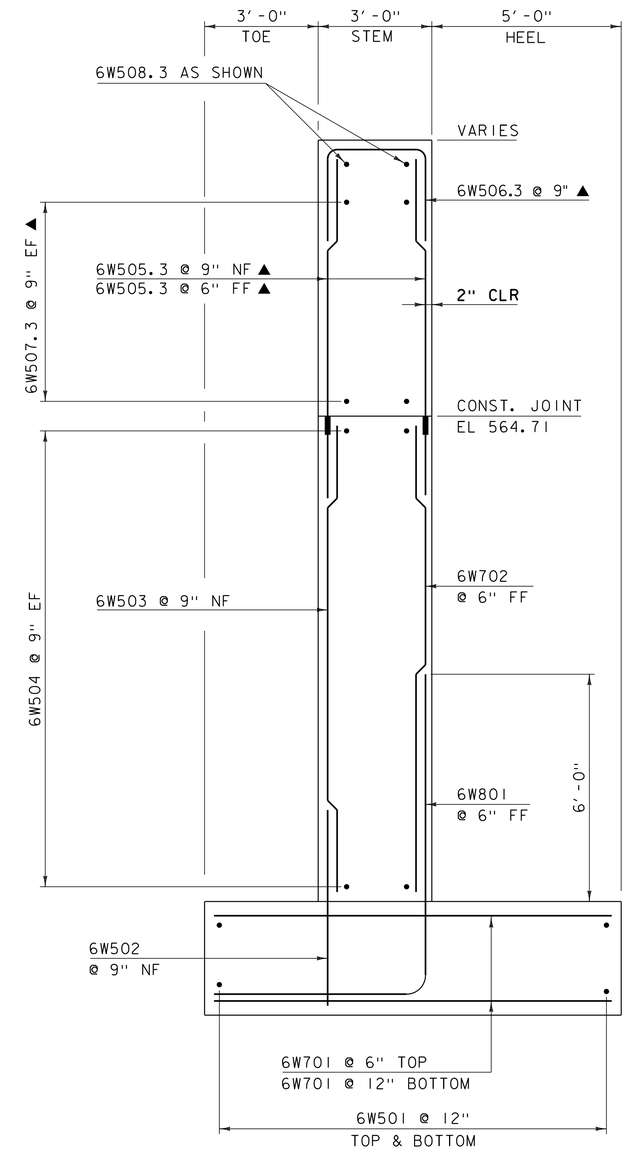

WINGWALL 6 TYPICAL

SCALE: 1/4" = 1'-0"

NOTE:

NF = NEAR FACE
FF = FAR FACE
EF = EACH FACE
▲ = CUT TO FIT IN FIELD
▬ = MECHANICAL CONNECTOR
3" CLEAR, UNLESS OTHERWISE SPECIFIED ON THE PLANS.
2'-2" LAP FOR #5 BAR
2'-7" LAP FOR #6 BAR
3'-5" LAP FOR #7 BAR
4'-6" LAP FOR #8 BAR

PROJECT NAME: HARFORD	
PROJECT NUMBER: IM 091-2(79)	
FILE NAME: s12a132sub_ab3.dgn	PLOT DATE: 15-DEC-2014
PROJECT LEADER: K. HIGGINS	DRAWN BY: J. SALVATORI
DESIGNED BY: G. LAROCHE	CHECKED BY: G. LAROCHE
WINGWALL 6 DETAILS	SHEET 112 OF 166

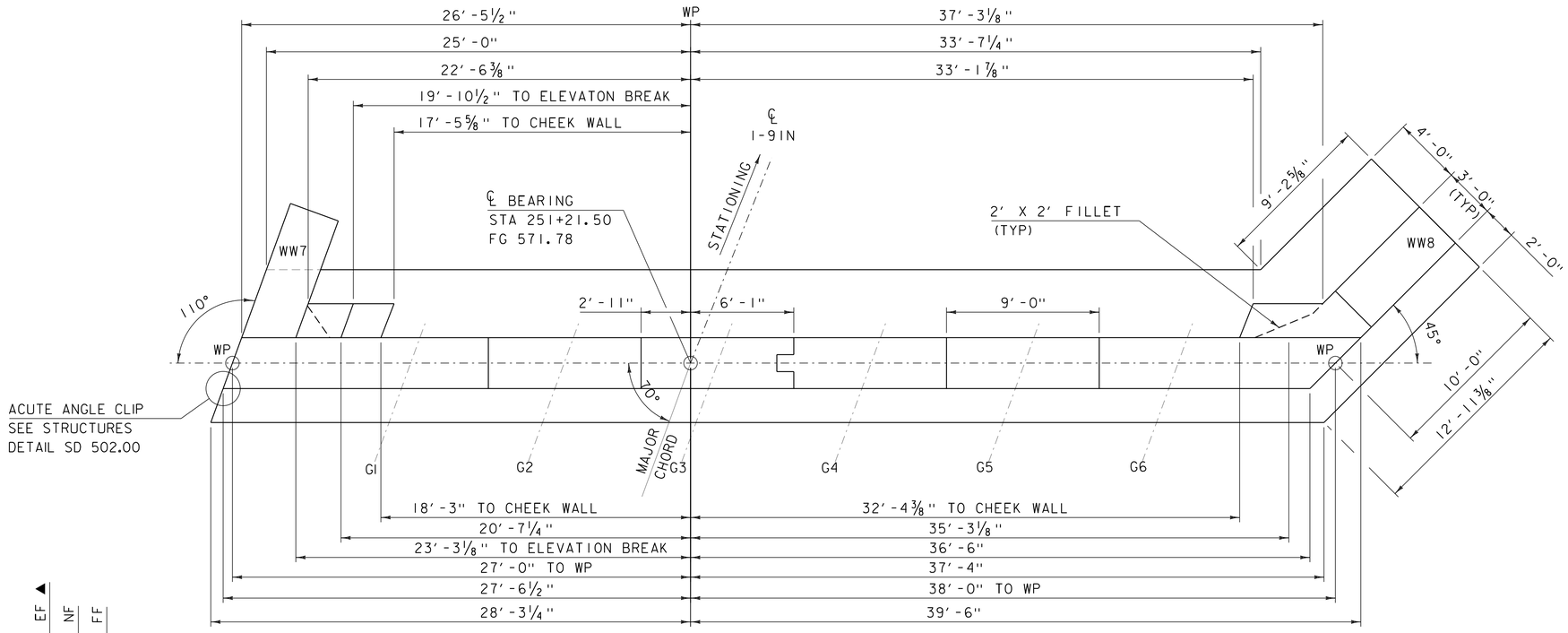

ABUTMENT 4 PLAN

SCALE: ¼" = 1'-0"

BRIDGE SEAT ELEVATIONS

GIRDER	ELEVATION
G1	567.81
G2	567.35
G3	566.88
G4	566.40
G5	565.93
G6	565.47

SLIDE DIRECTION

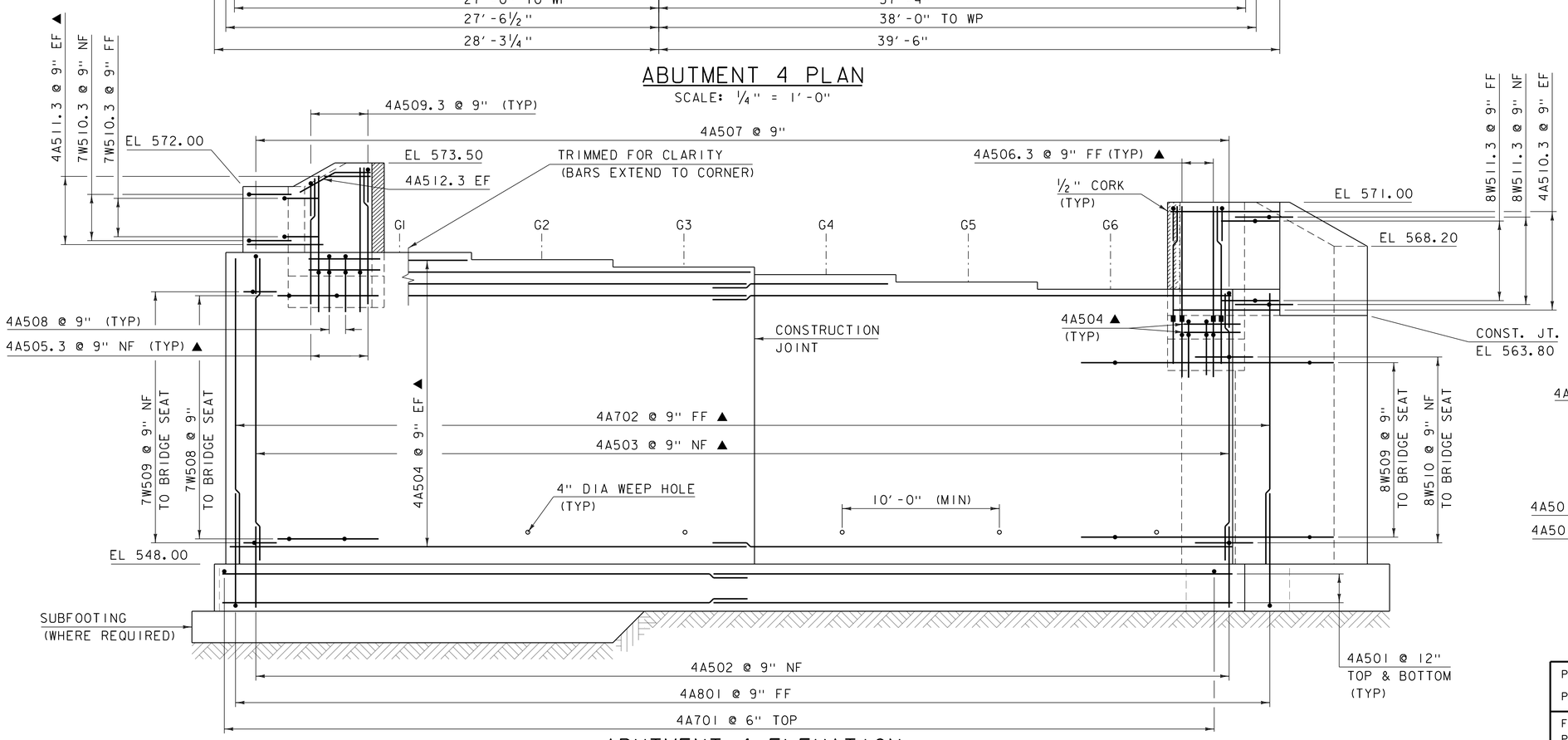

ABUTMENT 4 ELEVATION

SCALE: ¼" = 1'-0"

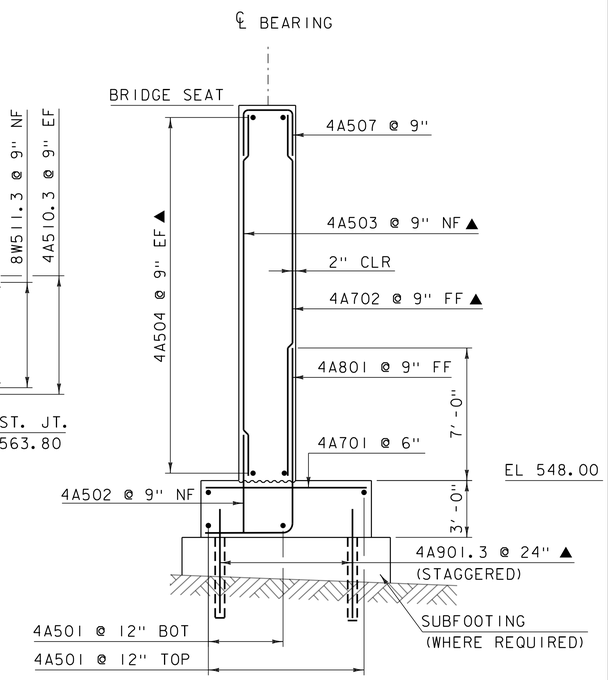

ABUTMENT 4 TYPICAL AT BRIDGE SEAT

SCALE: ¼" = 1'-0"

PROJECT NAME: HARTFORD	
PROJECT NUMBER: IM 091-2(79)	
FILE NAME: s12a132sub_ab4	PLOT DATE: 15-DEC-2014
PROJECT LEADER: K. HIGGINS	DRAWN BY: J. SALVATORI
DESIGNED BY: G. LAROCHE	CHECKED BY: G. LAROCHE
ABUTMENT 4	SHEET 113 OF 166

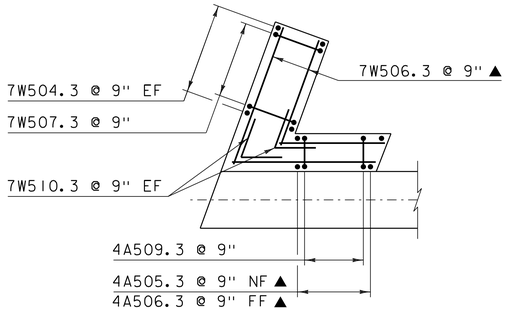

WINGWALL 7 CORNER DETAIL ABOVE BRIDGE SEAT

SCALE: 1/4" = 1'-0"

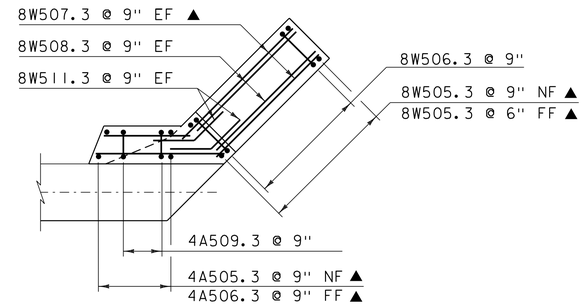

WINGWALL 8 CORNER DETAIL ABOVE BRIDGE SEAT

SCALE: 1/4" = 1'-0"

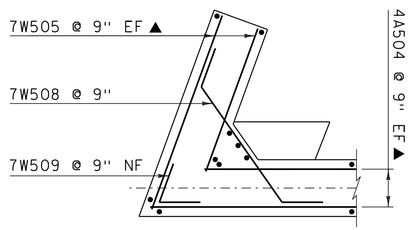

WINGWALL 7 CORNER DETAIL BELOW BRIDGE SEAT

SCALE: 1/4" = 1'-0"

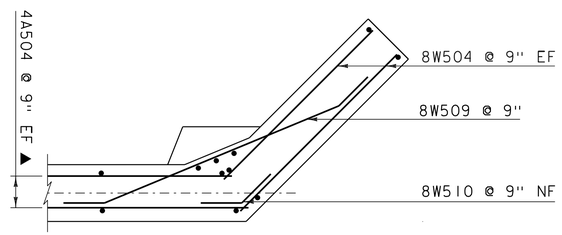

WINGWALL 8 CORNER DETAIL BELOW BRIDGE SEAT

SCALE: 1/4" = 1'-0"

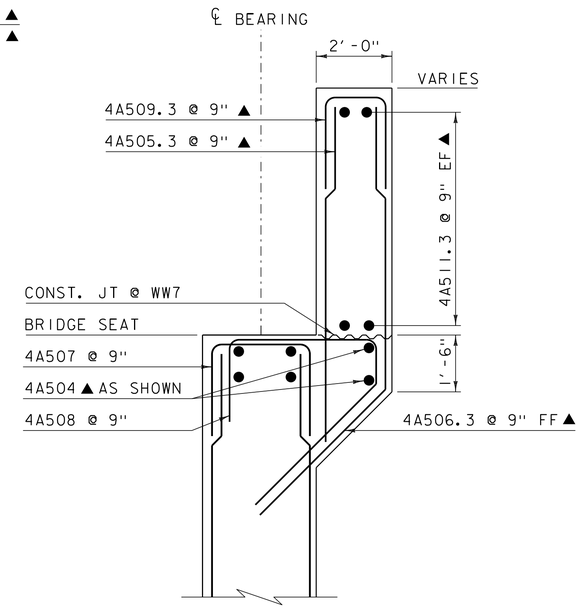

ABUTMENT 4 CHEEK WALL REINFORCING @ WW 7

SCALE: 1/4" = 1'-0"

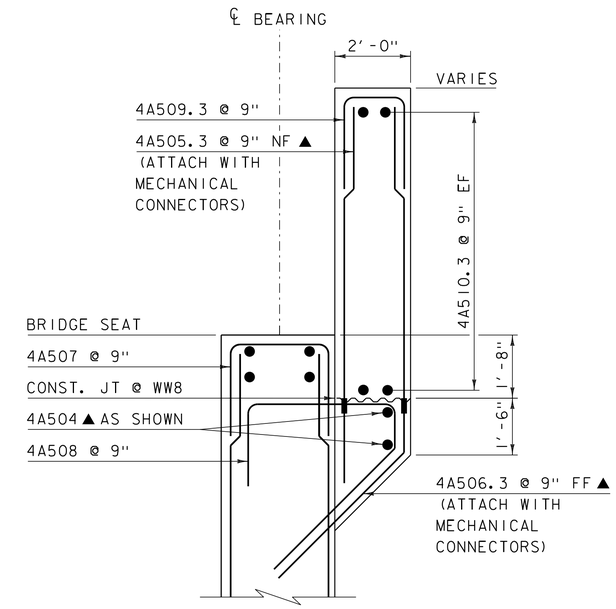

ABUTMENT 4 CHEEK WALL REINFORCING @ WW 8

SCALE: 1/4" = 1'-0"

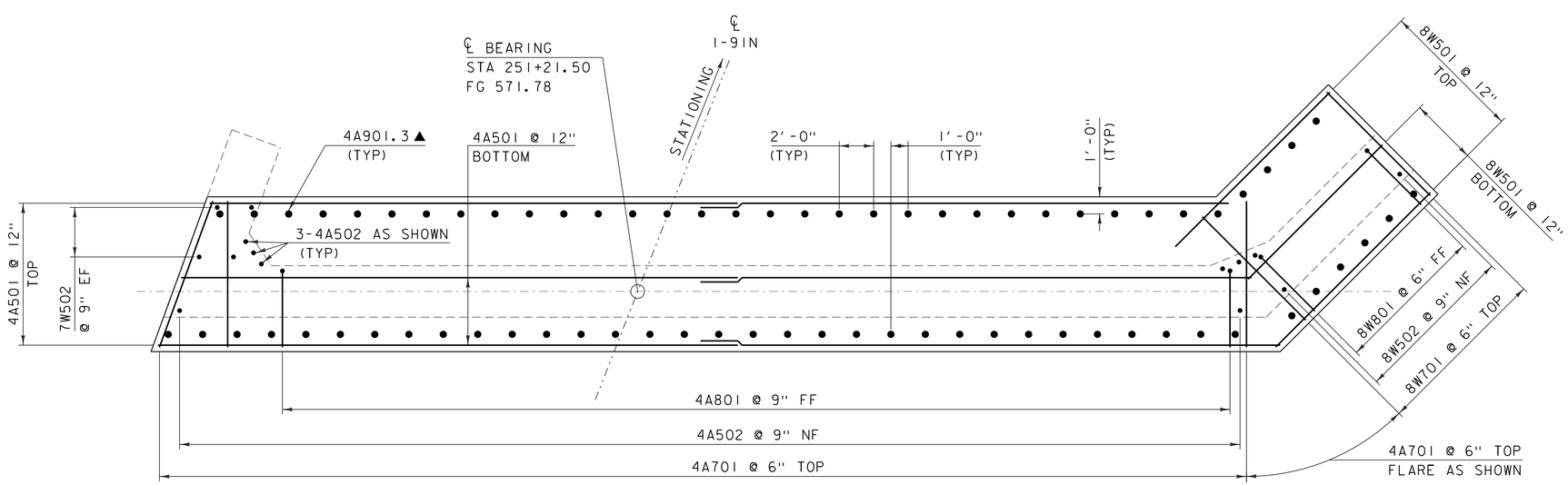

ABUTMENT 4 FOOTING PLAN

SCALE: 1/4" = 1'-0"

NOTE:

NF = NEAR FACE
FF = FAR FACE
EF = EACH FACE
▲ = CUT TO FIT IN FIELD
▬ = MECHANICAL CONNECTOR
3" CLEAR, UNLESS OTHERWISE SPECIFIED ON THE PLANS.
2'-2" LAP FOR #5 BAR
2'-7" LAP FOR #6 BAR
3'-5" LAP FOR #7 BAR
4'-6" LAP FOR #8 BAR

PROJECT NAME: HARTFORD	
PROJECT NUMBER: IM 091-2(79)	
FILE NAME: s12a132sub_ab4	PLOT DATE: 15-DEC-2014
PROJECT LEADER: K. HIGGINS	DRAWN BY: J. SALVATORI
DESIGNED BY: G. LAROCHE	CHECKED BY: G. LAROCHE
ABUTMENT 4 FOOTING	SHEET 114 OF 166

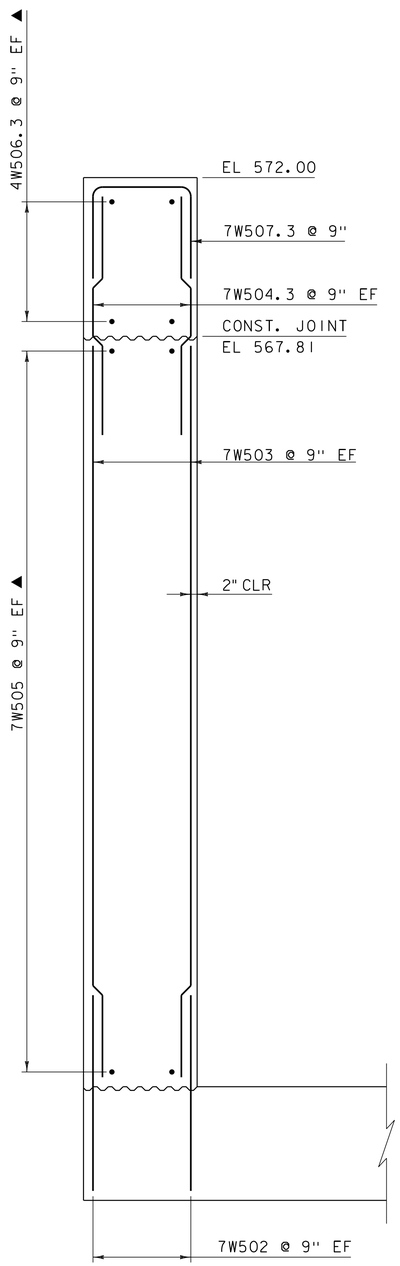

WINGWALL 7 TYPICAL

SCALE: ½" = 1'-0"

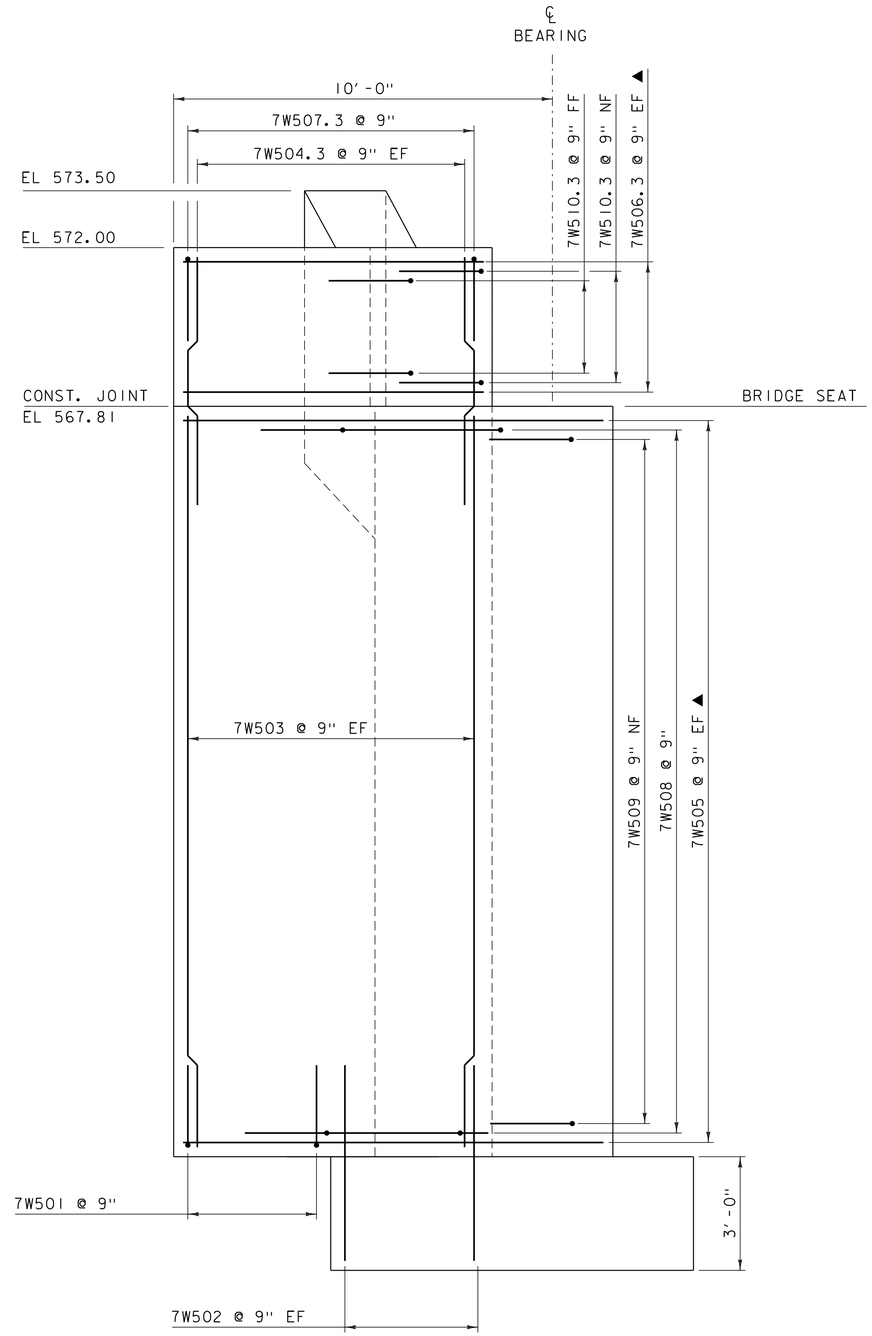

WINGWALL 7 ELEVATION

SCALE: ½" = 1'-0"

NOTE:

NF = NEAR FACE
FF = FAR FACE
EF = EACH FACE
▲ = CUT TO FIT IN FIELD
▬ = MECHANICAL CONNECTOR
3" CLEAR, UNLESS OTHERWISE SPECIFIED ON THE PLANS.
2'-2" LAP FOR #5 BAR
2'-7" LAP FOR #6 BAR
3'-5" LAP FOR #7 BAR
4'-6" LAP FOR #8 BAR

PROJECT NAME: HARTFORD	
PROJECT NUMBER: IM 091-2(79)	
FILE NAME: s12a132sub_ab4	PLOT DATE: 15-DEC-2014
PROJECT LEADER: K. HIGGINS	DRAWN BY: J. SALVATORI
DESIGNED BY: G. LAROCHE	CHECKED BY: G. LAROCHE
WINGWALL 7 DETAILS	SHEET 115 OF 166

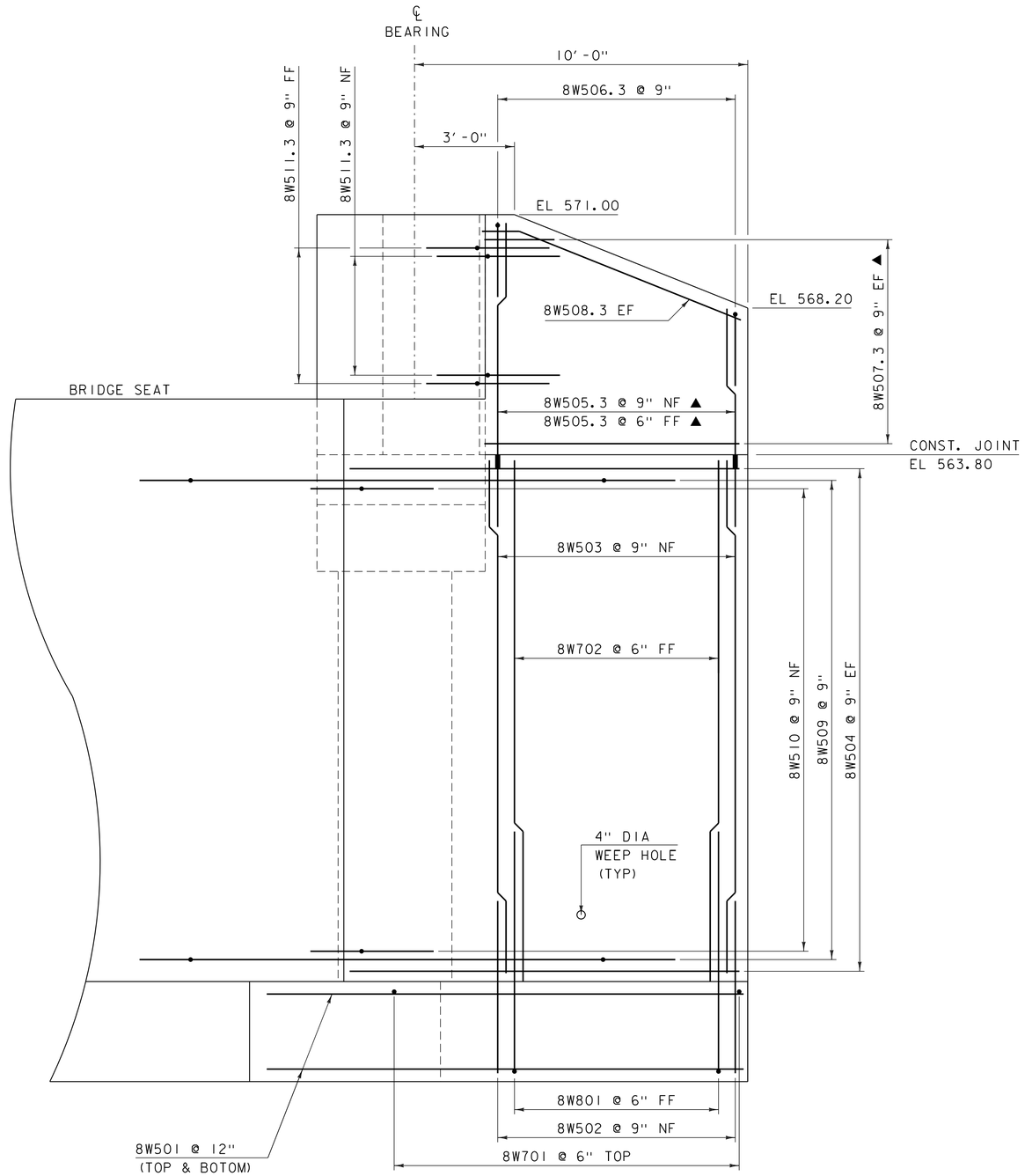

WINGWALL 8 ELEVATION

SCALE: ½" = 1'-0"

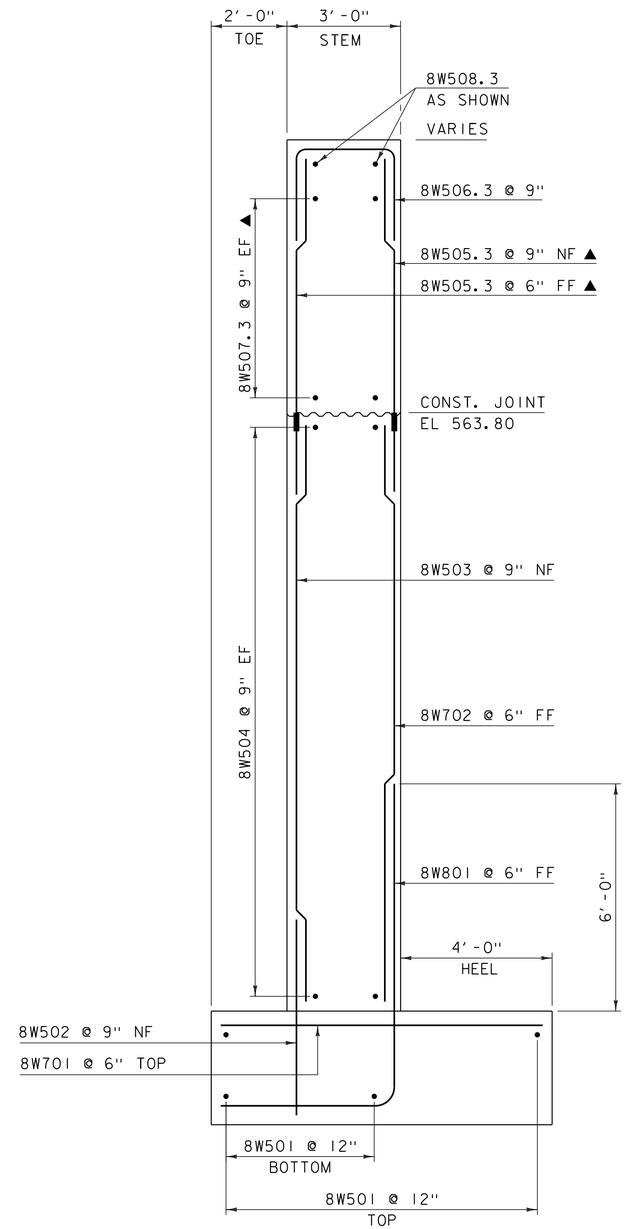

WINGWALL 8 TYPICAL

SCALE: ½" = 1'-0"

NOTE:

NF = NEAR FACE
FF = FAR FACE
EF = EACH FACE
▲ = CUT TO FIT IN FIELD
▬ = MECHANICAL CONNECTOR
3" CLEAR, UNLESS OTHERWISE SPECIFIED ON THE PLANS.
2'-2" LAP FOR #5 BAR
2'-7" LAP FOR #6 BAR
3'-5" LAP FOR #7 BAR
4'-6" LAP FOR #8 BAR

PROJECT NAME: HARTFORD	
PROJECT NUMBER: IM 091-2(79)	
FILE NAME: s12a132sub_ab4	PLOT DATE: 15-DEC-2014
PROJECT LEADER: K. HIGGINS	DRAWN BY: J. SALVATORI
DESIGNED BY: G. LAROCHE	CHECKED BY: G. LAROCHE
WINGWALL 8 DETAILS	SHEET 116 OF 166

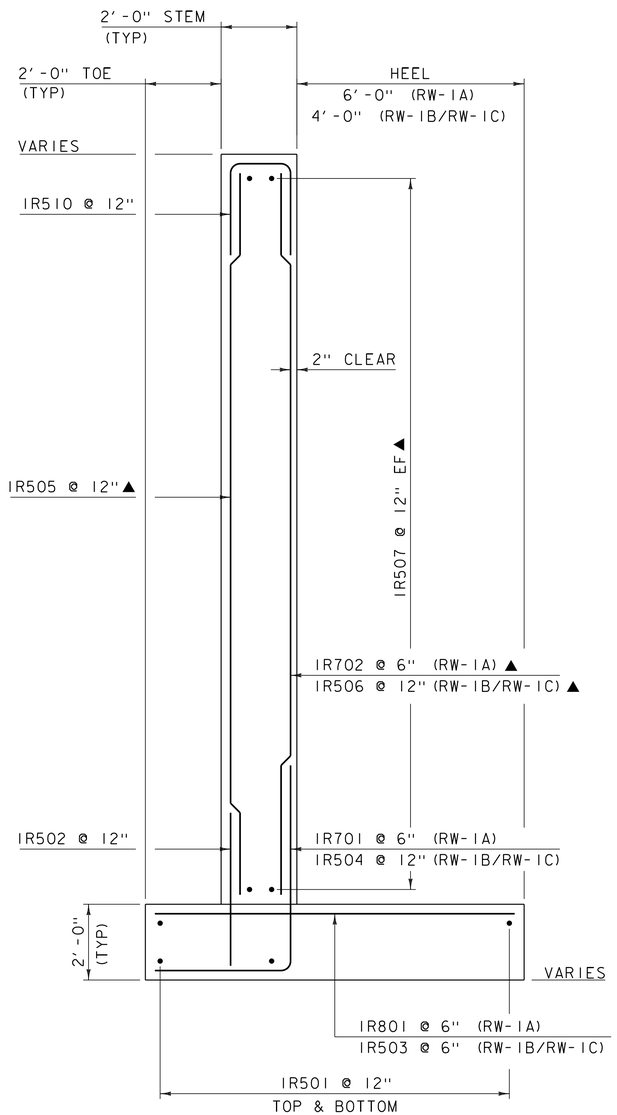

RETAINING WALL #1 TYPICAL

SCALE ½ = 1'-0"

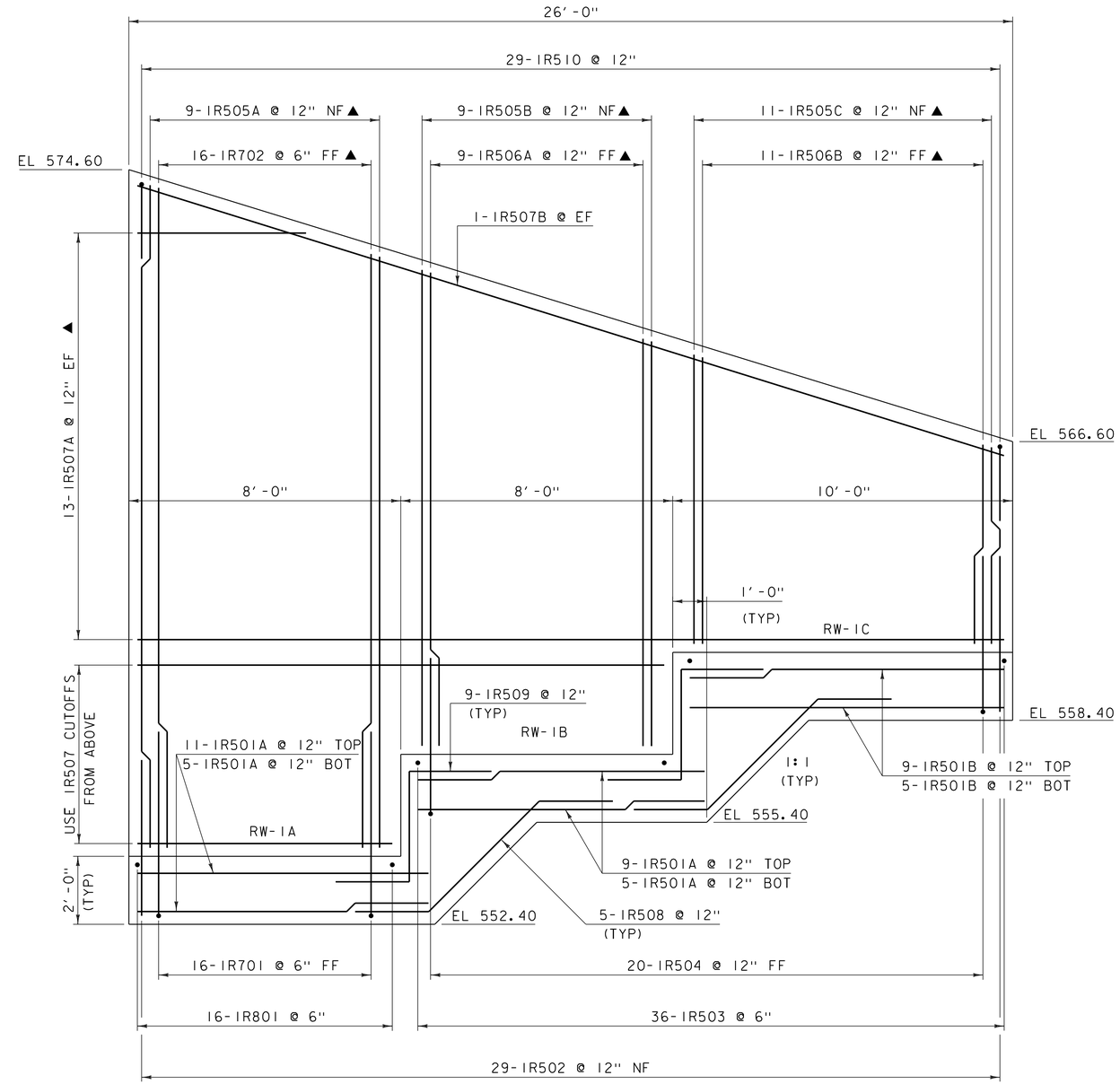

RETAINING WALL #1 ELEVATION

SCALE ½" = 1'-0"

NOTE:

NF = NEAR FACE
FF = FAR FACE
EF = EACH FACE
▲ = CUT TO FIT IN FIELD
3" CLEAR, UNLESS OTHERWISE SPECIFIED ON THE PLANS.
2'-2" LAP FOR #5 BAR
2'-7" LAP FOR #6 BAR
3'-5" LAP FOR #7 BAR
4'-6" LAP FOR #8 BAR

PROJECT NAME: HARTFORD	
PROJECT NUMBER: IM 091-2(79)	
FILE NAME: s12a132retwall.dgn	PLOT DATE: 15-DEC-2014
PROJECT LEADER: K. HIGGINS	DRAWN BY: J. SALVATORI
DESIGNED BY: G. LAROCHE	CHECKED BY: J. GRIGAS
RETAINING WALL #1	SHEET 117 OF 166

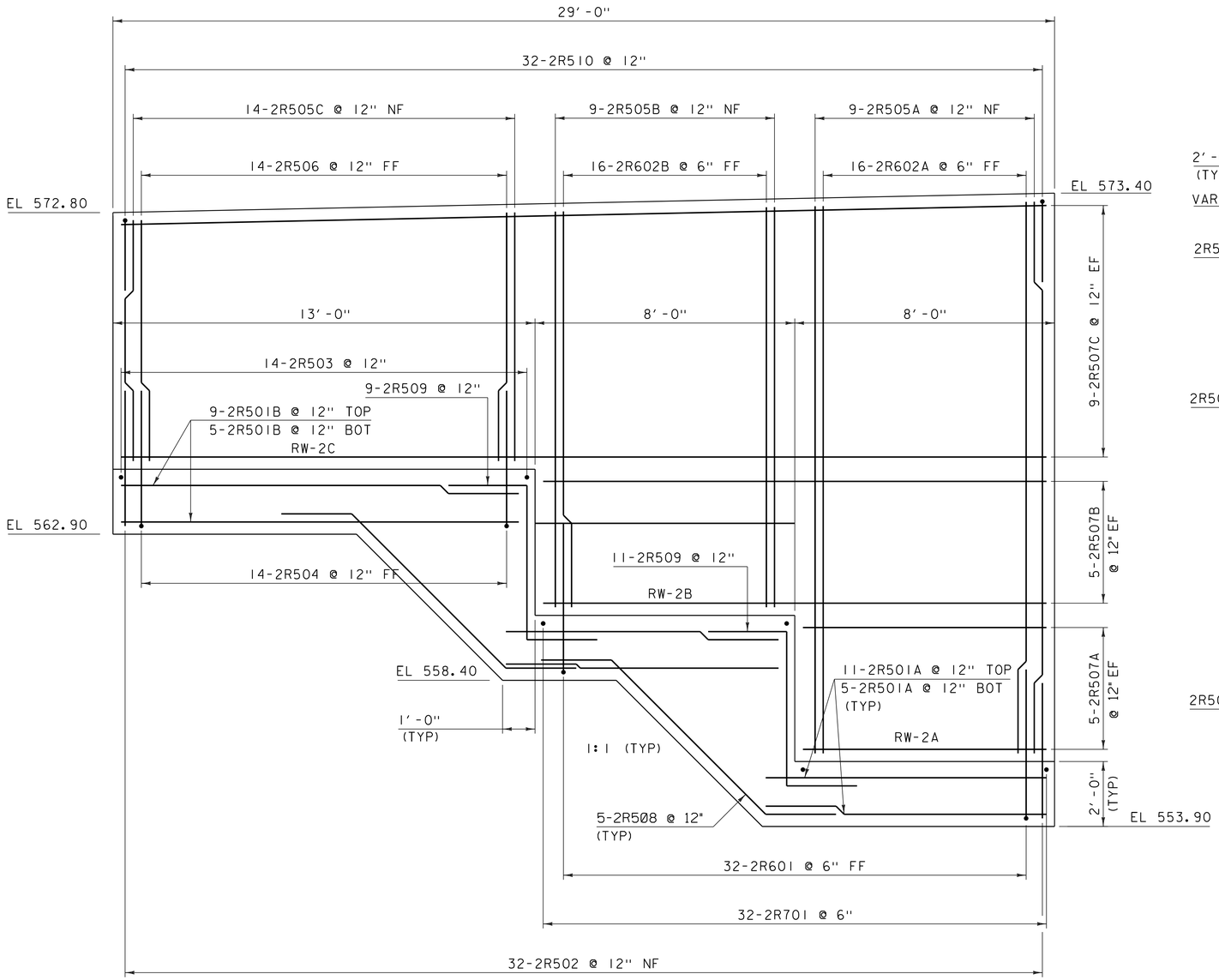

RETAINING WALL #2 ELEVATION

SCALE 1/2 = 1'-0"

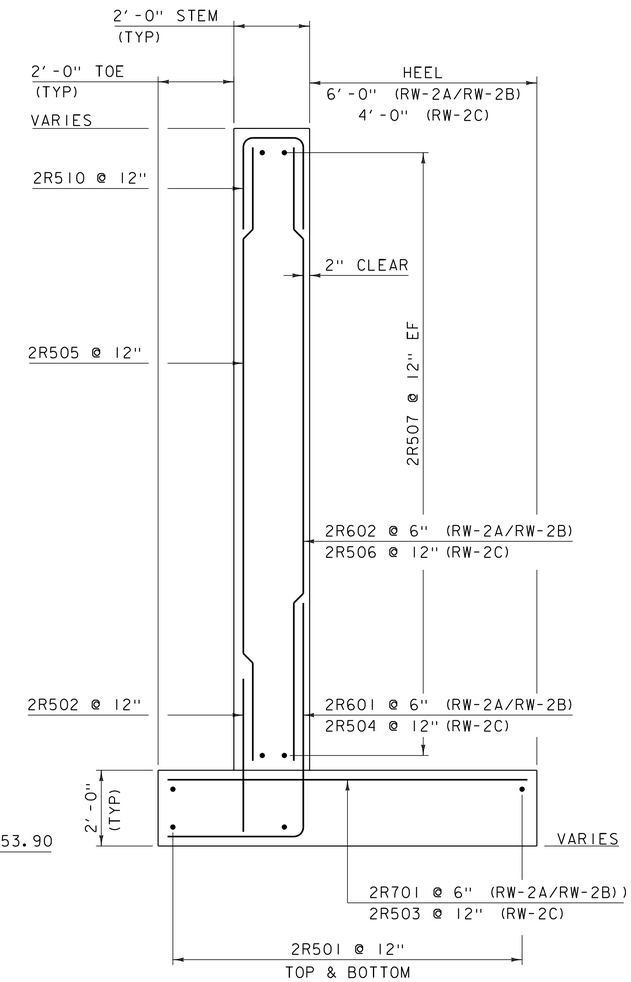

RETAINING WALL #2 TYPICAL

SCALE 1/2 = 1'-0"

NOTE:

NF = NEAR FACE
FF = FAR FACE
EF = EACH FACE
▲ = CUT TO FIT IN FIELD
3" CLEAR, UNLESS OTHERWISE SPECIFIED ON THE PLANS.
2'-2" LAP FOR #5 BAR
2'-7" LAP FOR #6 BAR
3'-5" LAP FOR #7 BAR
4'-6" LAP FOR #8 BAR

PROJECT NAME: HARTFORD	
PROJECT NUMBER: IM 091-2(79)	
FILE NAME: s12a132retwall.dgn	PLOT DATE: 15-DEC-2014
PROJECT LEADER: K. HIGGINS	DRAWN BY: J. SALVATORI
DESIGNED BY: G. LAROCHE	CHECKED BY: J. GRIGAS
RETAINING WALL #2	SHEET 118 OF 166

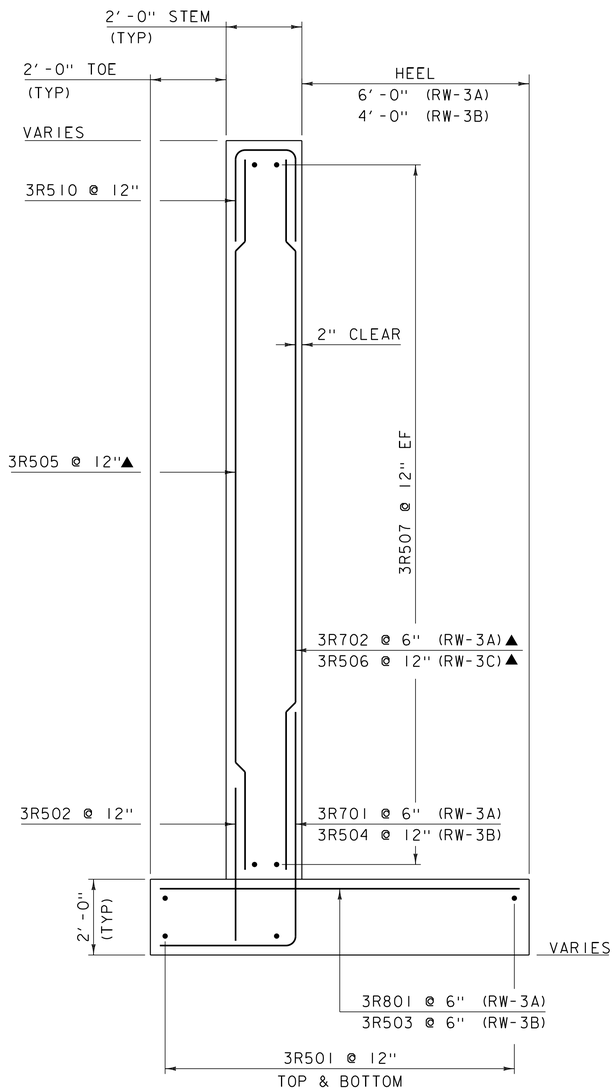

RETAINING WALL #3 TYPICAL

SCALE ½ =1'-0"

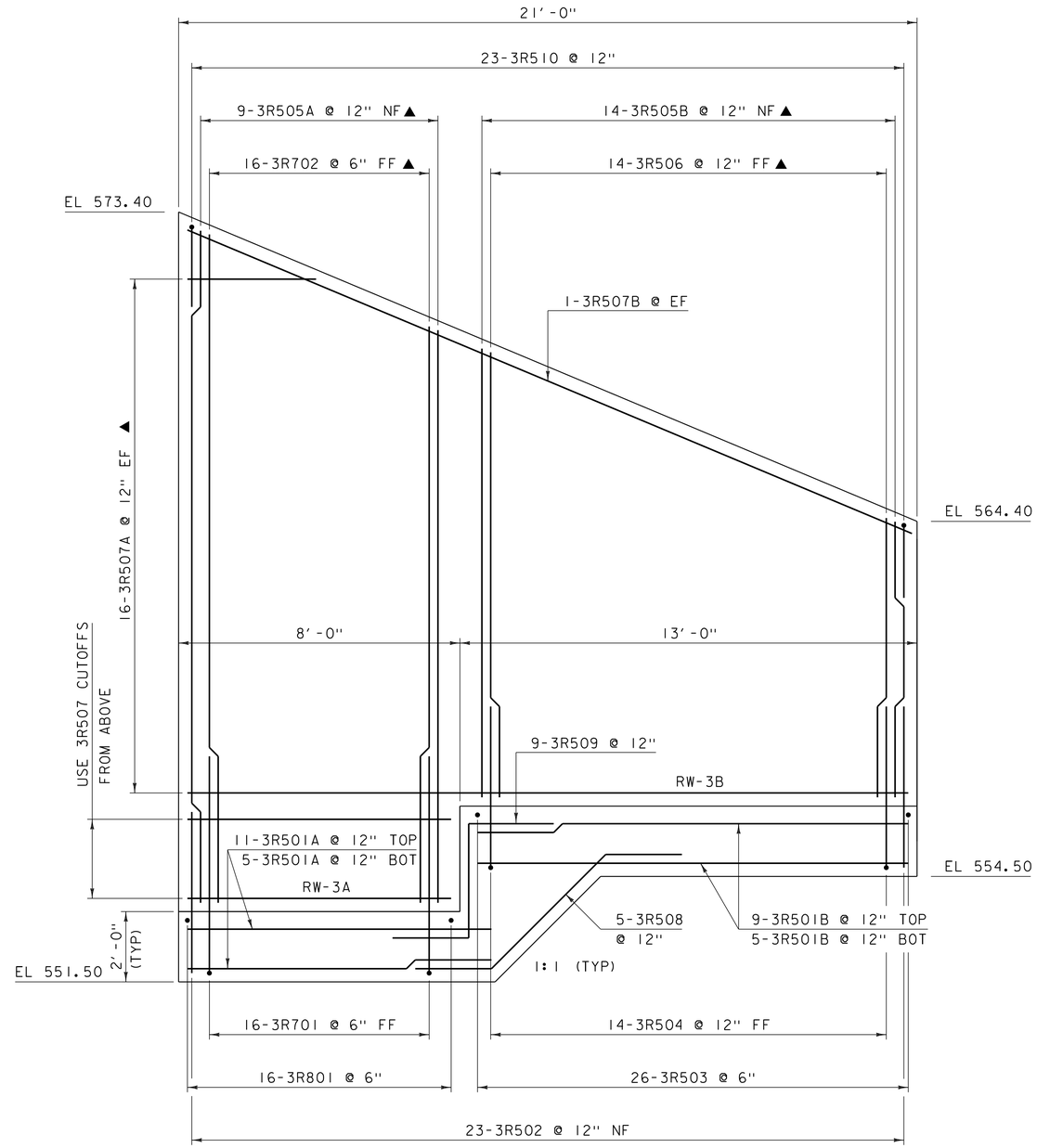

RETAINING WALL #3 ELEVATION

SCALE ½ =1'-0"

NOTE:

NF = NEAR FACE
FF = FAR FACE
EF = EACH FACE
▲ = CUT TO FIT IN FIELD
3" CLEAR, UNLESS OTHERWISE SPECIFIED ON THE PLANS.
2'-2" LAP FOR #5 BAR
2'-7" LAP FOR #6 BAR
3'-5" LAP FOR #7 BAR
4'-6" LAP FOR #8 BAR

PROJECT NAME: HARTFORD	
PROJECT NUMBER: IM 091-2(79)	
FILE NAME: s12al32retwall.dgn	PLOT DATE: 15-DEC-2014
PROJECT LEADER: K. HIGGINS	DRAWN BY: J. SALVATORI
DESIGNED BY: G. LAROCHE	CHECKED BY: J. GRIGAS
RETAINING WALL #3	SHEET 119 OF 166

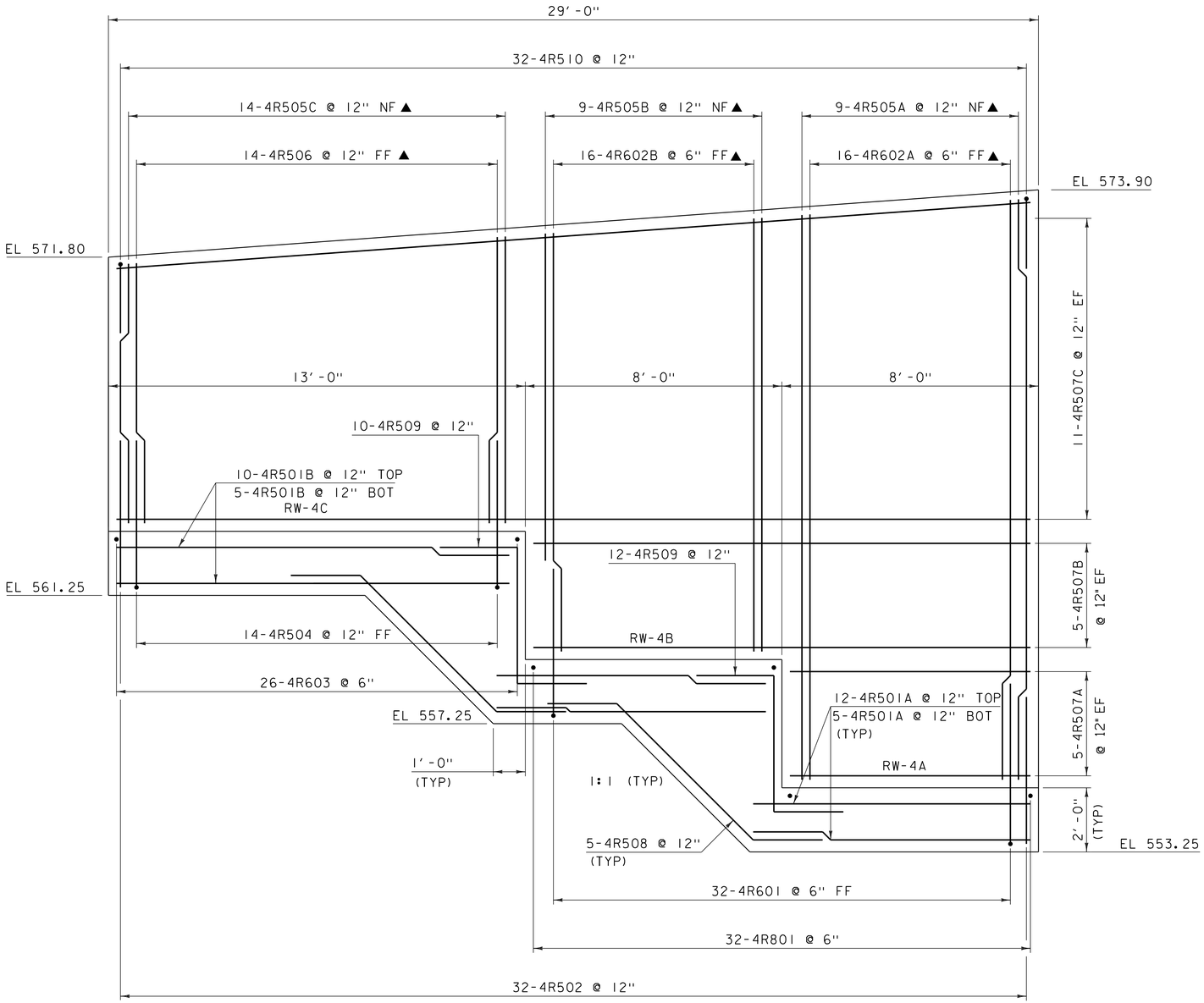

RETAINING WALL #4 ELEVATION

SCALE ½ = 1'-0"

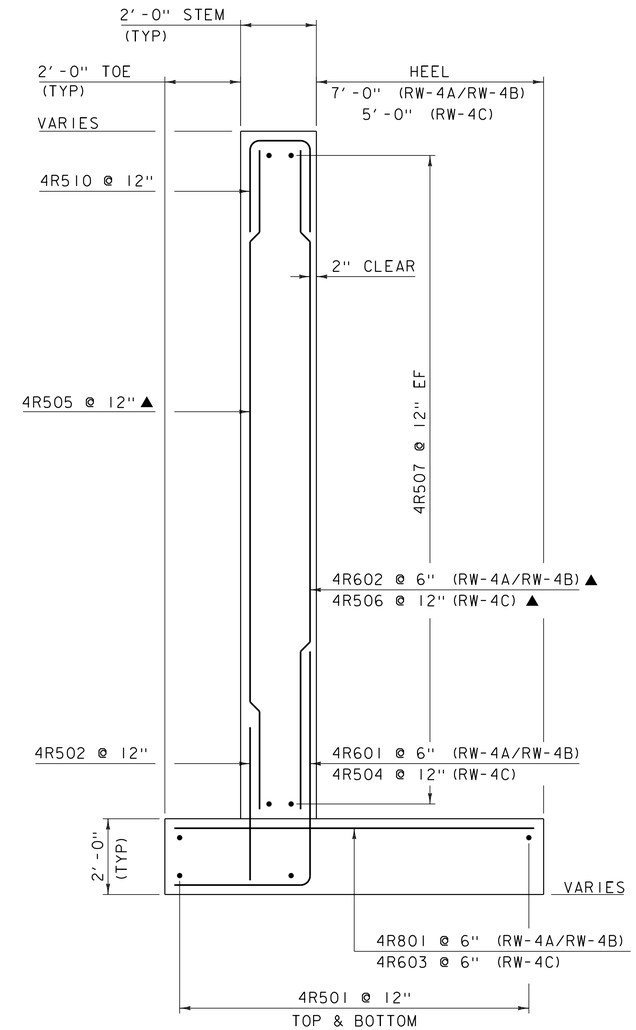

RETAINING WALL #4 TYPICAL

SCALE ½ = 1'-0"

NOTE:

NF = NEAR FACE
FF = FAR FACE
EF = EACH FACE
▲ = CUT TO FIT IN FIELD
3" CLEAR, UNLESS OTHERWISE SPECIFIED ON THE PLANS.
2'-2" LAP FOR #5 BAR
2'-7" LAP FOR #6 BAR
3'-5" LAP FOR #7 BAR
4'-6" LAP FOR #8 BAR

PROJECT NAME: HARTFORD	
PROJECT NUMBER: IM 091-2(79)	
FILE NAME: s12a132retwall.dgn	PLOT DATE: 15-DEC-2014
PROJECT LEADER: K. HIGGINS	DRAWN BY: J. SALVATORI
DESIGNED BY: G. LAROCHE	CHECKED BY: J. GRIGAS
RETAINING WALL #4	SHEET 120 OF 166

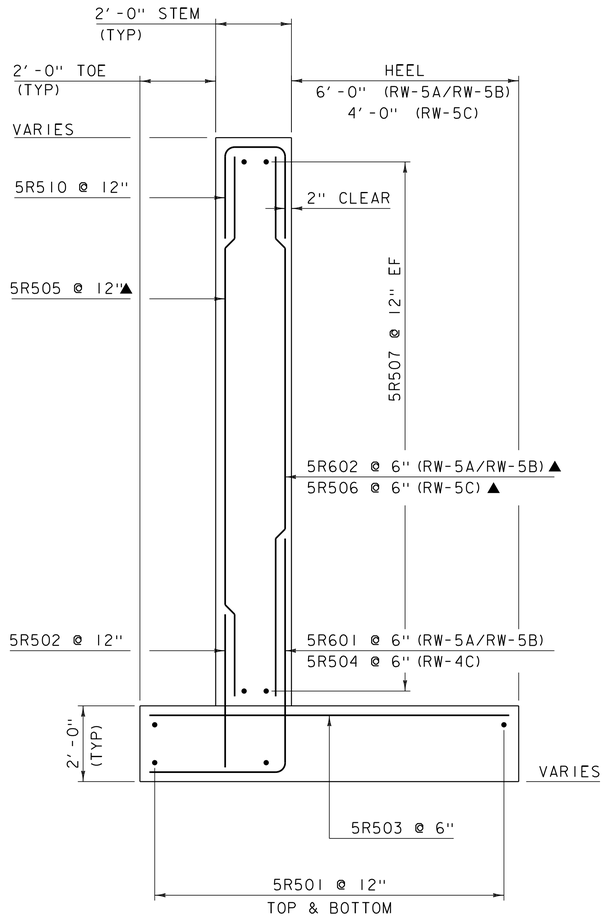

RETAINING WALL #5 TYPICAL

SCALE ½ = 1'-0"

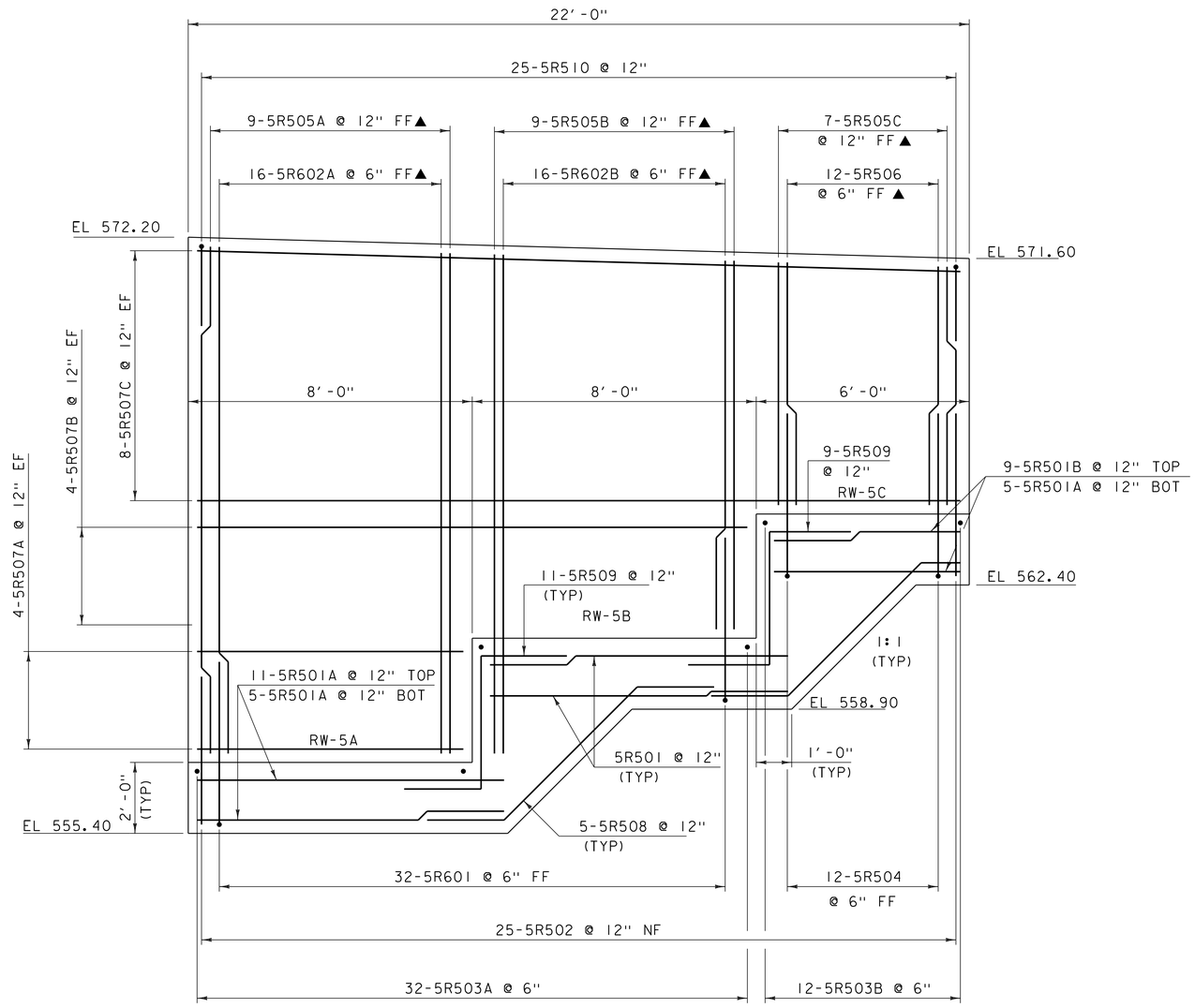

RETAINING WALL #5 ELEVATION

SCALE ½ = 1'-0"

NOTE:

NF = NEAR FACE
FF = FAR FACE
EF = EACH FACE
▲ = CUT TO FIT IN FIELD
3" CLEAR, UNLESS OTHERWISE SPECIFIED ON THE PLANS.
2'-2" LAP FOR #5 BAR
2'-7" LAP FOR #6 BAR
3'-5" LAP FOR #7 BAR
4'-6" LAP FOR #8 BAR

PROJECT NAME: HARTFORD	
PROJECT NUMBER: IM 091-2(79)	
FILE NAME: s12a132retwall.dgn	PLOT DATE: 15-DEC-2014
PROJECT LEADER: K. HIGGINS	DRAWN BY: J. SALVATORI
DESIGNED BY: G. LAROCHE	CHECKED BY: J. GRIGAS
RETAINING WALL #5	SHEET 121 OF 166

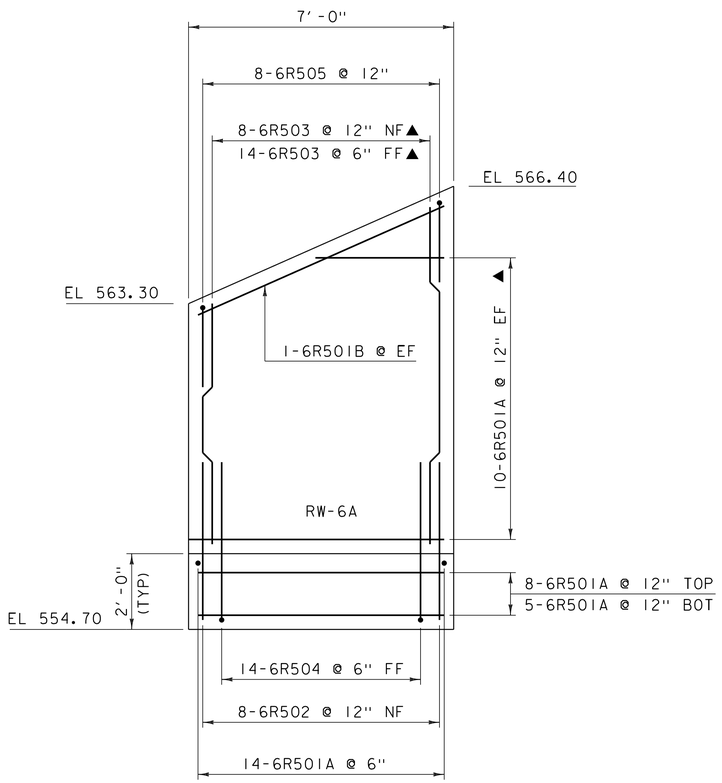

RETAINING WALL #6 TYPICAL

SCALE ½ =1'-0"

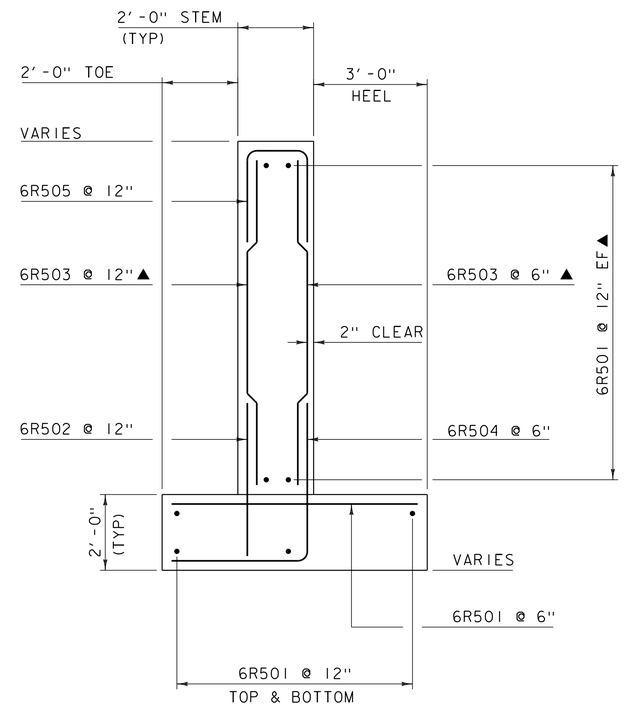

RETAINING WALL #6 TYPICAL

SCALE ½ =1'-0"

NOTE:

NF = NEAR FACE
FF = FAR FACE
EF = EACH FACE
▲ = CUT TO FIT IN FIELD
3" CLEAR, UNLESS OTHERWISE SPECIFIED ON THE PLANS.
2'-2" LAP FOR #5 BAR
2'-7" LAP FOR #6 BAR
3'-5" LAP FOR #7 BAR
4'-6" LAP FOR #8 BAR

PROJECT NAME: HARTFORD	
PROJECT NUMBER: IM 091-2(79)	
FILE NAME: s12a132retwall.dgn	PLOT DATE: 15-DEC-2014
PROJECT LEADER: K. HIGGINS	DRAWN BY: J. SALVATORI
DESIGNED BY: G. LAROCHE	CHECKED BY: J. GRIGAS
RETAINING WALL #6	SHEET 122 OF 166

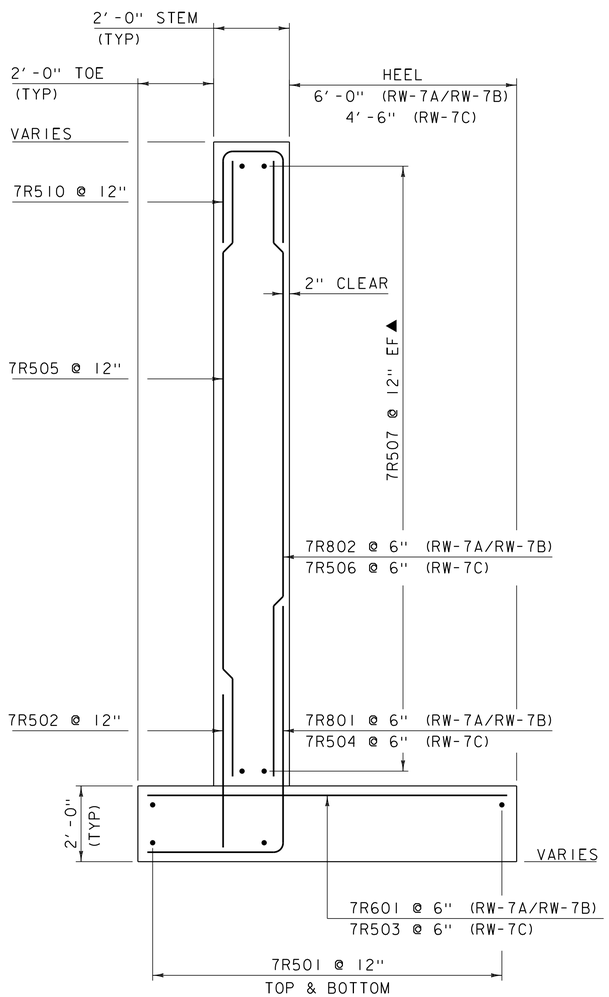

RETAINING WALL #7 TYPICAL

SCALE ½ = 1'-0"

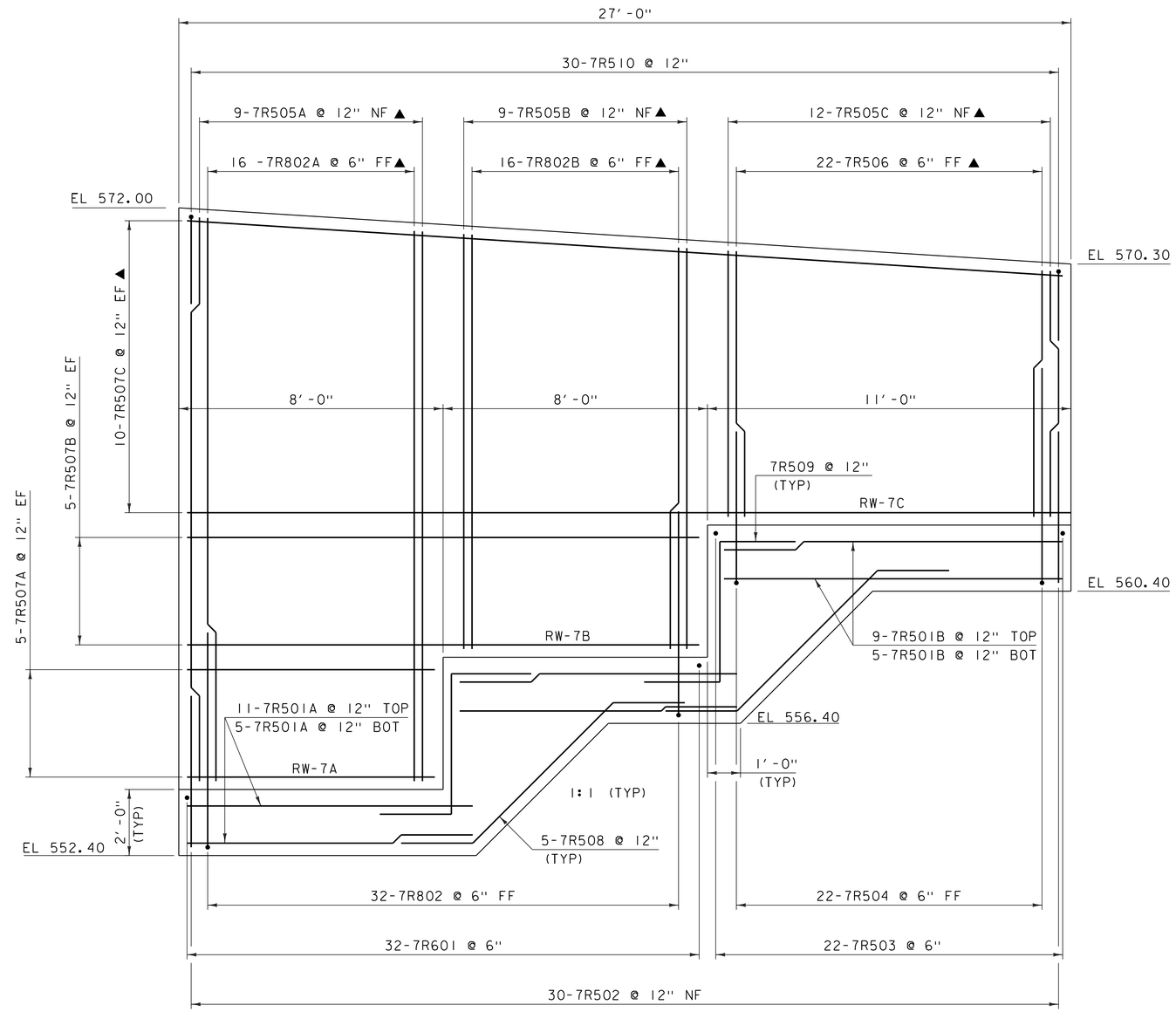

RETAINING WALL #7 ELEVATION

SCALE ½ = 1'-0"

NOTE:

NF = NEAR FACE
FF = FAR FACE
EF = EACH FACE
▲ = CUT TO FIT IN FIELD
3" CLEAR, UNLESS OTHERWISE SPECIFIED ON THE PLANS.
2'-2" LAP FOR #5 BAR
2'-7" LAP FOR #6 BAR
3'-5" LAP FOR #7 BAR
4'-6" LAP FOR #8 BAR

PROJECT NAME: HARTFORD	
PROJECT NUMBER: IM 091-2(79)	
FILE NAME: s12a132retwall.dgn	PLOT DATE: 15-DEC-2014
PROJECT LEADER: K. HIGGINS	DRAWN BY: J. SALVATORI
DESIGNED BY: G. LAROCHE	CHECKED BY: J. GRIGAS
RETAINING WALL #7	SHEET 123 OF 166

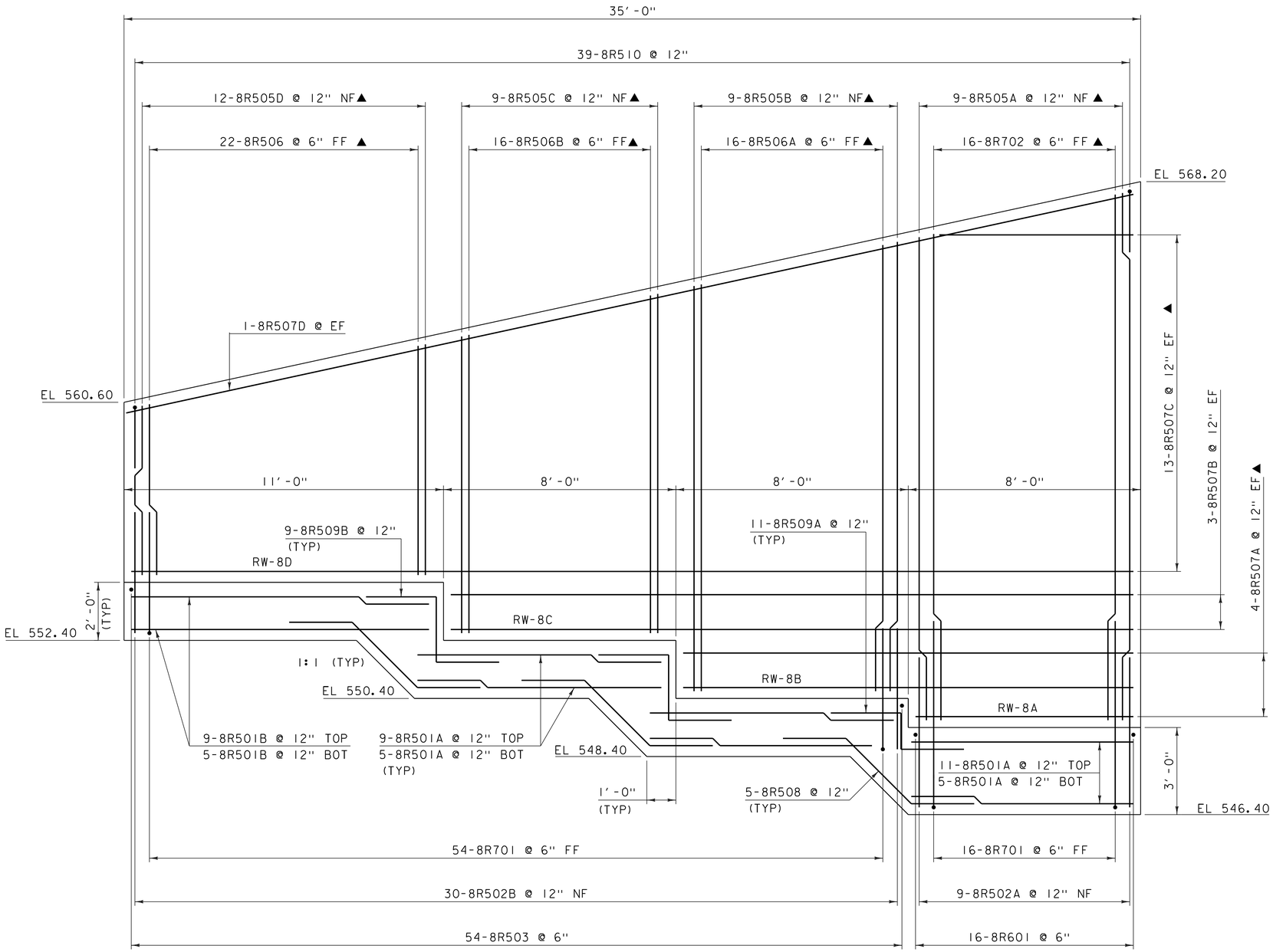

RETAINING WALL #8 ELEVATION

SCALE ½ =1'-0"

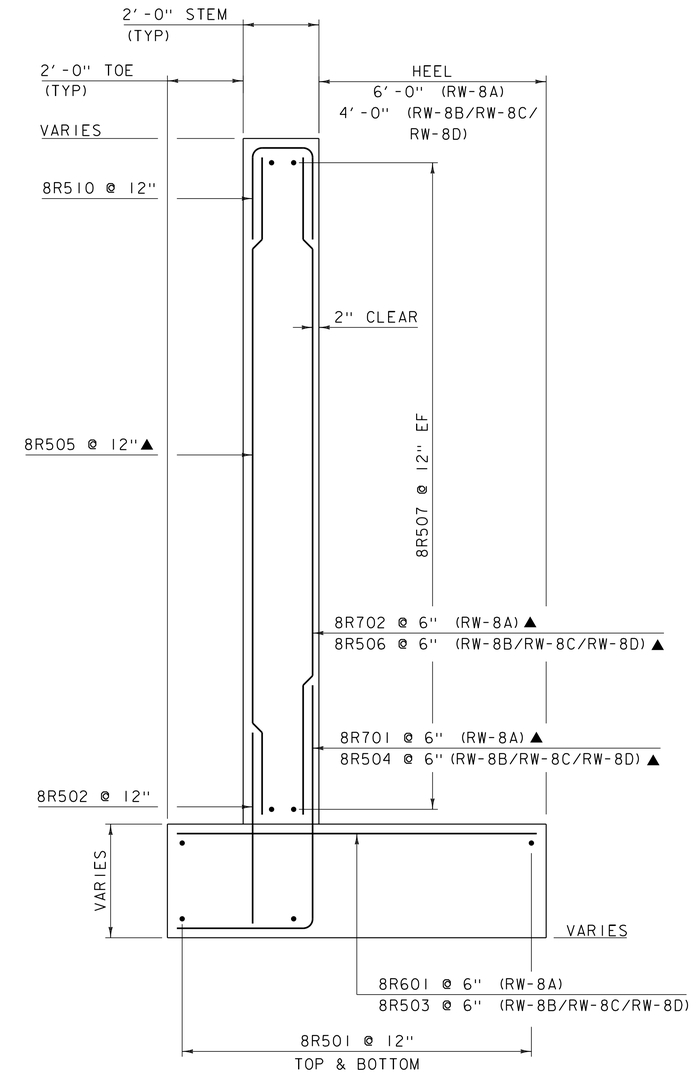

RETAINING WALL #8 TYPICAL

SCALE ½ =1'-0"

NOTE:

NF = NEAR FACE
FF = FAR FACE
EF = EACH FACE
▲ = CUT TO FIT IN FIELD
3" CLEAR, UNLESS OTHERWISE SPECIFIED ON THE PLANS.
2'-2" LAP FOR #5 BAR
2'-7" LAP FOR #6 BAR
3'-5" LAP FOR #7 BAR
4'-6" LAP FOR #8 BAR

PROJECT NAME: HARTFORD	
PROJECT NUMBER: IM 091-2(79)	
FILE NAME: s12a132retwall.dgn	PLOT DATE: 15-DEC-2014
PROJECT LEADER: K. HIGGINS	DRAWN BY: J. SALVATORI
DESIGNED BY: C. LAROCHE	CHECKED BY: J. GRIGAS
RETAINING WALL #8	SHEET 124 OF 166

STATE OF VERMONT
AGENCY OF TRANSPORTATION

△1 REINFORCING STEEL SCHEDULE

ITEM	EACH	SIZE	LENGTH	MARK	TYPE	A	B	C	D	E	F	G	H	J	K	R	O
	32	5	36'- 2"	1S501.3	STR												
▲	90	5	17'- 1"	1S502.3	STR												
▲	30	5	37'- 2"	1S503.3	STR												
✳ ▲	21	5	11'- 9"	1S504.3	STR												
▲	28	5	26'- 2"	1S505.3	STR												
▲	46	5	11'- 10"	1S506.3	STR												
	356	5	35'- 7"	1S507.3	STR												
	88	5	27'- 2"	1S508.3	STR												
	12	5	27'- 2"	1S509.3	STR												
	56	6	36'- 6"	1S601.3	STR												
	484	6	25'- 7"	1S602.3	STR												
✳	65	6	23'- 11"	1S603.3	STR												
	102	6	2'- 10"	1S605.3	STR												
△	466	4	5'- 0"	1S401.3	1	0'- 6"	4'- 6"					---		0'- 4"			
▲	416	5	3'- 9"	1S510.3	1	0'- 7"	3'- 2"					---		0'- 5"			
	204	5	18'- 7"	1S511.3	S5	2'- 5"	6'- 1"	1'- 10"	5'- 10"			2'- 5"					
	102	5	5'- 6"	1S512.3	22		2'- 5"	3'- 1"	---				1'- 9"	---	1'- 9"	---	
	124	5	5'- 8"	1S513.3	1	0'- 7"	5'- 1"					---		0'- 5"			
	212	6	7'- 3"	1S604.3	16	1'- 0"	2'- 1"	1'- 2"	3'- 0"				2'- 1"		2'- 1"		

ITEM	EACH	SIZE	LENGTH	MARK	TYPE	A	B	C	D	E	F	G	H	J	K	R	O

~ NOTES ~

1. UNLESS OTHERWISE DESIGNATED, ALL BAR REINFORCEMENT FOR CONCRETE IN SIZES UP TO AND INCLUDING NO. 18 SHALL CONFORM TO THE REQUIREMENTS OF THE "SPECIFICATIONS FOR DEFORMED BILLET-STEEL BARS FOR CONCRETE REINFORCEMENT", AASHTO M 31 (ASTM A 615-SI). ALL BARS SHALL BE GRADE 60, UNLESS OTHERWISE DESIGNATED.
2. FOR TYPICAL BENDING DETAILS, RECOMMENDED PIN DIAMETER "D" OF BENDS AND HOOKS, AND OTHER STANDARD PRACTICE, SEE CURRENT CONCRETE REINFORCING STEEL INSTITUTE "MANUAL OF STANDARD PRACTICE".
3. BARS WHICH REQUIRE MORE ACCURATE BENDING THAN STANDARD PRACTICES SHOULD HAVE LIMITS INDICATED.
4. ALL DIMENSIONS ARE OUT TO OUT OF BAR EXCEPT "A" AND "G" ON STANDARD 180 DEGREE AND 135 DEGREE HOOKS.
5. "J" DIMENSION ON 180 DEGREE HOOKS TO BE SHOWN ONLY WHERE NECESSARY TO RESTRICT HOOK SIZE. OTHERWISE, STANDARD HOOKS ARE TO BE USED.
6. "H" DIMENSION ON STIRRUPS TO BE SHOWN ONLY WHEN NECESSARY TO MAINTAIN CLEARANCES.
7. WHERE SLOPE DIFFERS FROM 45 DEGREES, DIMENSIONS "H" AND "K" MUST BE SHOWN.
8. ▲ DENOTES BARS TO BE CUT IN FIELD.
9. ✳ DENOTES ONE EXTRA BAR ADDED FOR TESTING PURPOSES.
10. △ DENOTES TWO EXTRA BARS ADDED FOR TESTING PURPOSES.
11. E IN BAR MARK PREFIX DENOTES EPOXY COATED REINFORCING STEEL.

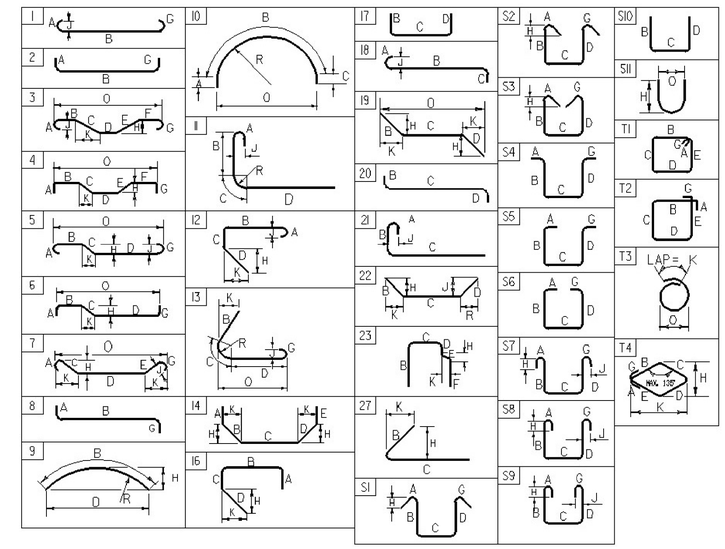

ASTM STANDARD REINFORCING BARS

BAR SIZE DESIGNATION	WEIGHT POUNDS PER FOOT	NOMINAL DIMENSIONS ROUND SECTION		
		DIAMETER INCHES	AREA (INCHES)²	PERIMETER INCHES
#3	0.376	0.375	0.11	1.178
#4	0.668	0.500	0.20	1.571
#5	1.043	0.625	0.31	1.963
#6	1.502	0.750	0.44	2.356
#7	2.04	0.875	0.60	2.749
#8	2.670	1.000	0.79	3.14
#9	3.400	1.13	1.00	3.54
#10	4.3	1.270	1.27	3.990
#11	5.31	1.410	1.56	4.430
#14	7.65	1.69	2.25	5.32
#18	13.60	2.26	4.00	7.09

~ REINFORCING STEEL CORROSION RESISTANCE LEVEL ~

THE REINFORCING STEEL MARKS IN THIS SCHEDULE INDICATE THE REQUIRED BAR CORROSION RESISTANCE LEVEL. CORROSION RESISTANCE LEVEL IS DENOTED WITH A .2 FOR LEVEL TWO SUFFIX OR .3 FOR LEVEL THREE SUFFIX, .1 FOR LEVEL ONE IS TO BE OMITTED. THE BAR MATERIAL TYPE AND BAR STEEL GRADE PROVIDED FOR EACH CORROSION LEVEL WILL BE RECORDED ON THE PLAN SET PI SHEET FOR AS-BUILT RECORD PLAN ARCHIVES.

REVISION	DATE	DESCRIPTION	BY
△1	01-05-2015	REINFORCING STEEL SCHEDULE UPDATE, ADDED TEST BARS	RK

PROJECT NAME: **HARTFORD**
PROJECT NUMBER: **IM 091-2 (79)**

FILE NAME: **s12a132RSS_43S.dgn**
PROJECT MANAGER: **K. HIGGINS**
DESIGNED BY: **R. KLINEFELTER**
RSS SUPERSTRUCTURE 43S

PLOT DATE: **1/5/2015**
DRAWN BY: **K. FRIEDLAND**
CHECKED BY: **J. GRIGAS**
SHEET **125** OF **166**

STATE OF VERMONT
AGENCY OF TRANSPORTATION

△1 REINFORCING STEEL SCHEDULE

ITEM	EACH	SIZE	LENGTH	MARK	TYPE	A	B	C	D	E	F	G	H	J	K	R	O
	32	5	36'- 2"	2S501.3	STR												
▲	90	5	17'- 1"	2S502.3	STR												
▲	30	5	36'- 5"	2S503.3	STR												
✳ ▲	23	5	11'- 1"	2S504.3	STR												
▲	26	5	26'- 0"	2S505.3	STR												
▲	46	5	10'- 11"	2S506.3	STR												
	344	5	35'- 7"	2S507.3	STR												
	80	5	26'- 2"	2S508.3	STR												
	12	5	26'- 2"	2S509.3	STR												
	56	6	36'- 6"	2S601.3	STR												
	484	6	24'- 7"	2S602.3	STR												
✳	63	6	23'- 6"	2S603.3	STR												
	98	6	2'- 10"	2S605.3	STR												
△	466	4	4'- 10"	2S401.3	1	0'- 6"	4'- 4"					---		0'- 4"			
▲	416	5	3'- 4"	2S510.3	1	0'- 7"	2'- 9"					---		0'- 5"			
	202	5	16'- 9"	2S511.3	S5	2'- 5"	5'- 2"	1'- 10"	4'- 11"			2'- 5"					
	102	5	5'- 6"	2S512.3	22		2'- 5"	3'- 1"	---				1'- 9"	---	1'- 9"	---	
	124	5	5'- 4"	2S513.3	1	0'- 7"	4'- 9"					---		0'- 5"			
	204	6	7'- 3"	2S604.3	16	1'- 0"	2'- 1"	1'- 2"	3'- 0"				2'- 1"		2'- 1"		

~ NOTES ~

1. UNLESS OTHERWISE DESIGNATED, ALL BAR REINFORCEMENT FOR CONCRETE IN SIZES UP TO AND INCLUDING NO. 18 SHALL CONFORM TO THE REQUIREMENTS OF THE "SPECIFICATIONS FOR DEFORMED BILLET-STEEL BARS FOR CONCRETE REINFORCEMENT", AASHTO M 31 (ASTM A 615-SI). ALL BARS SHALL BE GRADE 60, UNLESS OTHERWISE DESIGNATED.
2. FOR TYPICAL BENDING DETAILS, RECOMMENDED PIN DIAMETER "D" OF BENDS AND HOOKS, AND OTHER STANDARD PRACTICE, SEE CURRENT CONCRETE REINFORCING STEEL INSTITUTE "MANUAL OF STANDARD PRACTICE".
3. BARS WHICH REQUIRE MORE ACCURATE BENDING THAN STANDARD PRACTICES SHOULD HAVE LIMITS INDICATED.
4. ALL DIMENSIONS ARE OUT TO OUT OF BAR EXCEPT "A" AND "G" ON STANDARD 180 DEGREE AND 135 DEGREE HOOKS.
5. "J" DIMENSION ON 180 DEGREE HOOKS TO BE SHOWN ONLY WHERE NECESSARY TO RESTRICT HOOK SIZE. OTHERWISE, STANDARD HOOKS ARE TO BE USED.
6. "H" DIMENSION ON STIRRUPS TO BE SHOWN ONLY WHEN NECESSARY TO MAINTAIN CLEARANCES.
7. WHERE SLOPE DIFFERS FROM 45 DEGREES, DIMENSIONS "H" AND "K" MUST BE SHOWN.
8. ▲ DENOTES BARS TO BE CUT IN FIELD.
9. ✳ DENOTES ONE EXTRA BAR ADDED FOR TESTING PURPOSES.
10. △ DENOTES TWO EXTRA BARS ADDED FOR TESTING PURPOSES.
11. E IN BAR MARK PREFIX DENOTES EPOXY COATED REINFORCING STEEL.

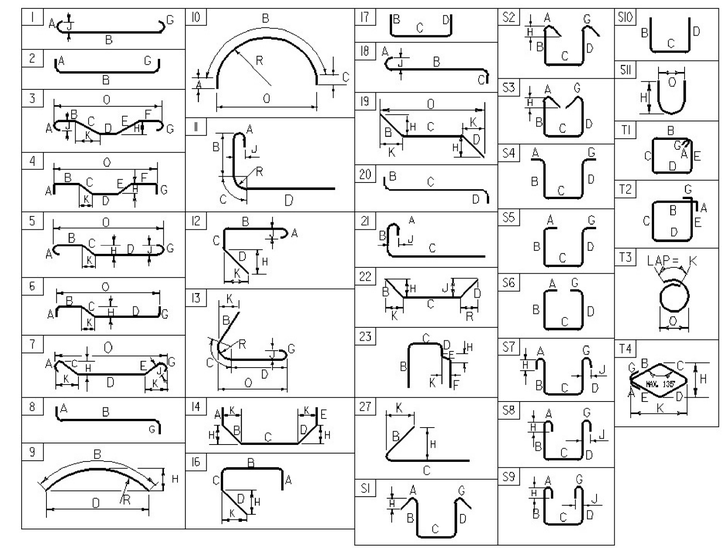

ASTM STANDARD REINFORCING BARS

BAR SIZE DESIGNATION	WEIGHT POUNDS PER FOOT	NOMINAL DIMENSIONS ROUND SECTION		
		DIAMETER INCHES	AREA INCHES2	PERIMETER INCHES
#3	0.376	0.375	0.11	1.178
#4	0.668	0.500	0.20	1.571
#5	1.043	0.625	0.31	1.963
#6	1.502	0.750	0.44	2.356
#7	2.04	0.875	0.60	2.749
#8	2.670	1.000	0.79	3.14
#9	3.400	1.13	1.00	3.54
#10	4.3	1.270	1.27	3.990
#11	5.31	1.410	1.56	4.430
#14	7.65	1.69	2.25	5.32
#18	13.60	2.26	4.00	7.09

~ REINFORCING STEEL CORROSION RESISTANCE LEVEL ~

THE REINFORCING STEEL MARKS IN THIS SCHEDULE INDICATE THE REQUIRED BAR CORROSION RESISTANCE LEVEL. CORROSION RESISTANCE LEVEL IS DENOTED WITH A .2 FOR LEVEL TWO SUFFIX OR .3 FOR LEVEL THREE SUFFIX, .1 FOR LEVEL ONE IS TO BE OMITTED. THE BAR MATERIAL TYPE AND BAR STEEL GRADE PROVIDED FOR EACH CORROSION LEVEL WILL BE RECORDED ON THE PLAN SET PI SHEET FOR AS-BUILT RECORD PLAN ARCHIVES.

REVISION	DATE	DESCRIPTION	BY
△1	01-05-2015	REINFORCING STEEL SCHEDULE UPDATE, ADDED TEST BARS	RK

PROJECT NAME: **HARTFORD**
PROJECT NUMBER: **IM 091-2 (79)**

FILE NAME: **s12a132RSS_43N.dgn**
PROJECT MANAGER: **K. HIGGINS**
DESIGNED BY: **R. KLINEFELTER**
RSS SUPERSTRUCTURE 43N

PLOT DATE: **1/5/2015**
DRAWN BY: **K. FRIEDLAND**
CHECKED BY: **J. GRIGAS**
SHEET **126** OF **166**

STATE OF VERMONT
AGENCY OF TRANSPORTATION

△1 REINFORCING STEEL SCHEDULE

ITEM	EACH	SIZE	LENGTH	MARK	TYPE	A	B	C	D	E	F	G	H	J	K	R	O
ABUTMENT 1:																	
	48	5	33'- 9"	1A501	STR												
✳	90	5	5'- 2"	1A502	STR												
▲	89	5	20'- 5"	1A503	STR												
	116	5	32'- 9"	1A504	STR												
	92	5	7'- 5"	1A507	17		2'- 5"	2'- 7"	2'- 5"								
	17	5	12'- 11"	1A508	16	2'- 5"	4'- 7"	1'- 2"	4'- 9"				2'- 7"		2'- 7"		
✳	201	7	10'- 6"	1A701	STR												
	83	7	14'- 1"	1A702	STR												
✳	84	9	10'- 0"	1A901	STR												
	83	9	14'- 3"	1A902	17		5'- 7"	8'- 9"									
✳ ▲	26	5	10'- 6"	1A505.3	STR												
▲	17	5	13'- 7"	1A506.3	19		4'- 9"	8'- 10"					2'- 7"		2'- 7"		
	25	5	6'- 5"	1A509.3	17		2'- 5"	1'- 7"	2'- 5"								
	24	5	5'- 7"	1A510.3	STR												
▲	22	5	8'- 0"	1A511.3	STR												
	2	5	5'- 8"	1A512.3	19		2'- 5"	3'- 3"					1'- 4"		2'- 0"		
WW1:																	
	24	5	13'- 0"	1W501	STR												
	17	5	5'- 2"	1W502	STR												
	17	5	19'- 5"	1W503	STR												
	54	5	11'- 10"	1W504	STR												
	54	5	11'- 0"	1W509	19		5'- 6"	5'- 6"					3'- 6"		4'- 2"		
	27	5	4'- 10"	1W510	19		2'- 5"	2'- 5"					1'- 10"		1'- 7"		
	41	7	10'- 6"	1W701	STR												
	23	7	19'- 5"	1W702	STR												
	23	8	14'- 4"	1W801	17		5'- 7"	8'- 9"									
▲	27	5	9'- 11"	1W505.3	STR												
▲	13	5	7'- 5"	1W506.3	17		2'- 5"	2'- 7"	2'- 5"								
▲	22	5	8'- 0"	1W507.3	STR												
	2	5	7'- 10"	1W508.3	19		0'- 5"	7'- 5"					0'- 2"		0'- 4"		
	11	5	4'- 10"	1W511.3	19		2'- 5"	2'- 5"					1'- 10"	1'- 7"			
WW2:																	
	5	5	7'- 5"	2W501	17		2'- 5"	2'- 7"	2'- 5"								
	16	5	5'- 2"	2W502	STR												
	32	5	18'- 3"	2W503	STR												
▲	52	5	11'- 0"	2W505	STR												
	26	5	13'- 7"	2W508	22		2'- 5"	8'- 9"	2'- 5"				1'- 11"	1'- 11"	1'- 4"	1'- 4"	
	26	5	5'- 4"	2W509	27		2'- 8"	2'- 8"					2'- 6"		0'- 10"		
	24	5	7'- 0"	2W504.3	STR												
▲	14	5	7'- 10"	2W506.3	STR												
	12	5	7'- 5"	2W507.3	17		2'- 5"	2'- 7"	2'- 5"								
	14	5	5'- 4"	2W510.3	27		2'- 8"	2'- 8"					2'- 6"		0'- 10"		

ITEM	EACH	SIZE	LENGTH	MARK	TYPE	A	B	C	D	E	F	G	H	J	K	R	O

~ NOTES ~

1. UNLESS OTHERWISE DESIGNATED, ALL BAR REINFORCEMENT FOR CONCRETE IN SIZES UP TO AND INCLUDING NO. 18 SHALL CONFORM TO THE REQUIREMENTS OF THE "SPECIFICATIONS FOR DEFORMED BILLET-STEEL BARS FOR CONCRETE REINFORCEMENT", AASHTO M 31 (ASTM A 615-SI). ALL BARS SHALL BE GRADE 60, UNLESS OTHERWISE DESIGNATED.
2. FOR TYPICAL BENDING DETAILS, RECOMMENDED PIN DIAMETER "D" OF BENDS AND HOOKS, AND OTHER STANDARD PRACTICE, SEE CURRENT CONCRETE REINFORCING STEEL INSTITUTE "MANUAL OF STANDARD PRACTICE".
3. BARS WHICH REQUIRE MORE ACCURATE BENDING THAN STANDARD PRACTICES SHOULD HAVE LIMITS INDICATED.
4. ALL DIMENSIONS ARE OUT TO OUT OF BAR EXCEPT "A" AND "G" ON STANDARD 180 DEGREE AND 135 DEGREE HOOKS.
5. "J" DIMENSION ON 180 DEGREE HOOKS TO BE SHOWN ONLY WHERE NECESSARY TO RESTRICT HOOK SIZE. OTHERWISE, STANDARD HOOKS ARE TO BE USED.
6. "H" DIMENSION ON STIRRUPS TO BE SHOWN ONLY WHEN NECESSARY TO MAINTAIN CLEARANCES.
7. WHERE SLOPE DIFFERS FROM 45 DEGREES, DIMENSIONS "H" AND "K" MUST BE SHOWN.
8. ▲ DENOTES BARS TO BE CUT IN FIELD.
9. ✳ DENOTES ONE EXTRA BAR ADDED FOR TESTING PURPOSES.
10. △ DENOTES TWO EXTRA BARS ADDED FOR TESTING PURPOSES.
11. E IN BAR MARK PREFIX DENOTES EPOXY COATED REINFORCING STEEL.

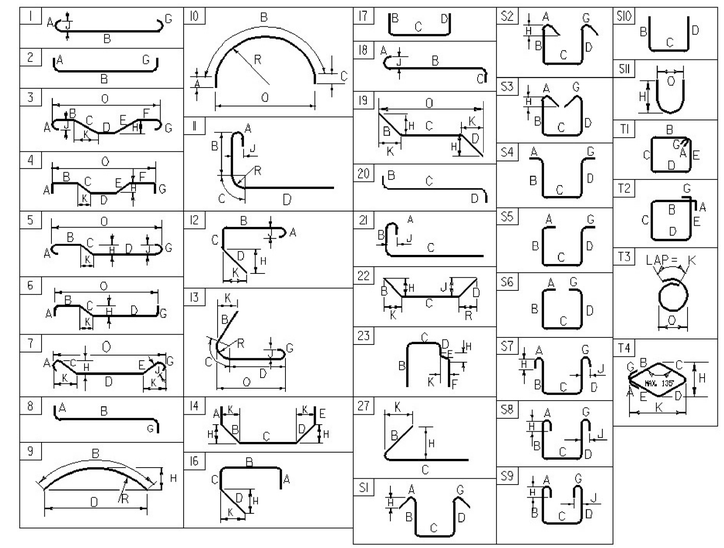

ASTM STANDARD REINFORCING BARS

BAR SIZE DESIGNATION	WEIGHT POUNDS PER FOOT	NOMINAL DIMENSIONS ROUND SECTION		
		DIAMETER INCHES	AREA INCHES^2	PERIMETER INCHES
#3	0.376	0.375	0.11	1.178
#4	0.668	0.500	0.20	1.571
#5	1.043	0.625	0.31	1.963
#6	1.502	0.750	0.44	2.356
#7	2.044	0.875	0.60	2.749
#8	2.670	1.000	0.79	3.142
#9	3.400	1.128	1.00	3.544
#10	4.303	1.270	1.27	3.990
#11	5.313	1.410	1.56	4.430
#14	7.65	1.693	2.25	5.32
#18	13.60	2.257	4.00	7.09

REVISION	DATE	DESCRIPTION	BY
△1	01-07-2015	REINFORCING STEEL SCHEDULE UPDATE, ADDED TEST BARS	WDL

PROJECT NAME: **HARTFORD**
PROJECT NUMBER: **IM 091-2 (79)**

FILE NAME: **s12a132RSS_AB1.dgn** PLOT DATE: **1/7/2015**
PROJECT MANAGER: **K. HIGGINS** DRAWN BY: **J. SALVATORI**
DESIGNED BY: **G. LAROCHE** CHECKED BY: **J. GRIGAS**
REINFORCING STEEL SCHEDULE ABUTMENT 1 SHEET **127** OF **166**

STATE OF VERMONT
AGENCY OF TRANSPORTATION

△1 REINFORCING STEEL SCHEDULE

ITEM	EACH	SIZE	LENGTH	MARK	TYPE	A	B	C	D	E	F	G	H	J	K	R	O
ABUTMENT 2:																	
	48	5	32'- 7"	2A501	STR												
✳	86	5	5'- 2"	2A502	STR												
▲	85	5	20'- 2"	2A503	STR												
	112	5	32'- 6"	2A504	STR												
	85	5	7'- 5"	2A507	17		2'- 5"	2'- 7"	2'- 5"								
	19	5	12'- 11"	2A508	16		2'- 5"	4'- 7"	1'- 2"	4'- 9"			3'- 4"		3'- 4"		
✳	211	7	10'- 6"	2A701	STR												
	81	7	13'- 10"	2A702	STR												
✳	82	9	10'- 0"	2A901	STR												
	81	9	14'- 3"	2A902	17		5'- 6"	8'- 9"									
▲	23	5	10'- 6"	2A505.3	STR												
▲	18	5	13'- 7"	2A506.3	19		4'- 9"	8'- 10"					3'- 4"		3'- 4"		
	17	5	6'- 5"	2A509.3	17		2'- 5"	1'- 7"	2'- 5"								
	24	5	5'- 4"	2A510.3	STR												
▲	20	5	7'- 9"	2A511.3	STR												
	2	5	5'- 0"	2A512.3	19		2'- 10"	2'- 2"					1'- 6"		2'- 5"		
WW3:																	
	24	5	12'- 11"	3W501	STR												
	17	5	5'- 2"	3W502	STR												
	17	5	19'- 2"	3W503	STR												
	54	5	11'- 4"	3W504	STR												
	28	5	18'- 11"	3W509	22		2'- 3"	14'- 5"	2'- 3"				1'- 1"	1'- 1"	2'- 0"	2'- 0"	
	28	5	4'- 8"	3W510	19		2'- 4"	2'- 4"					1'- 11"		1'- 4"		
	39	7	10'- 6"	3W701	STR												
	21	7	19'- 2"	3W702	STR												
✳	23	8	13'- 0"	3W801	17		5'- 6"	8'- 9"									
▲	28	5	9'- 11"	3W505.3	STR												
	12	5	7'- 5"	3W506.3	17		2'- 5"	2'- 7"	2'- 5"								
▲	24	5	7'- 8"	3W507.3	STR												
	2	5	8'- 11"	3W508.3	19		0'- 10"	8'- 1"					0'- 5"		0'- 8"		
	24	5	4'- 8"	3W511.3	19		2'- 4"	2'- 4"					1'- 11"		1'- 4"		
WW4:																	
	7	5	7'- 5"	4W501	17		2'- 5"	2'- 7"	2'- 5"								
	16	5	5'- 2"	4W502	STR												
	32	5	17'- 11"	4W503	STR												
	50	5	11'- 2"	4W505	STR												
	25	5	17'- 7"	4W508	22		2'- 3"	13'- 1"	2'- 3"				1'- 3"	1'- 2"	1'- 10"	1'- 11"	
	25	5	4'- 8"	4W509	19		2'- 4"	2'- 4"					2'- 1"		1'- 0"		
✳	26	5	7'- 0"	4W504.3	STR												
	16	5	7'- 10"	4W506.3	STR												
	15	5	7'- 5"	4W507.3	17		2'- 5"	2'- 7"	2'- 5"								
	20	5	4'- 8"	4W510.3	19		2'- 4"	2'- 4"					2'- 1"		1'- 0"		

ITEM	EACH	SIZE	LENGTH	MARK	TYPE	A	B	C	D	E	F	G	H	J	K	R	O

~ NOTES ~

1. UNLESS OTHERWISE DESIGNATED, ALL BAR REINFORCEMENT FOR CONCRETE IN SIZES UP TO AND INCLUDING NO. 18 SHALL CONFORM TO THE REQUIREMENTS OF THE "SPECIFICATIONS FOR DEFORMED BILLET-STEEL BARS FOR CONCRETE REINFORCEMENT", AASHTO M 31 (ASTM A 615-SI). ALL BARS SHALL BE GRADE 60, UNLESS OTHERWISE DESIGNATED.
2. FOR TYPICAL BENDING DETAILS, RECOMMENDED PIN DIAMETER "D" OF BENDS AND HOOKS, AND OTHER STANDARD PRACTICE, SEE CURRENT CONCRETE REINFORCING STEEL INSTITUTE "MANUAL OF STANDARD PRACTICE".
3. BARS WHICH REQUIRE MORE ACCURATE BENDING THAN STANDARD PRACTICES SHOULD HAVE LIMITS INDICATED.
4. ALL DIMENSIONS ARE OUT TO OUT OF BAR EXCEPT "A" AND "G" ON STANDARD 180 DEGREE AND 135 DEGREE HOOKS.
5. "J" DIMENSION ON 180 DEGREE HOOKS TO BE SHOWN ONLY WHERE NECESSARY TO RESTRICT HOOK SIZE. OTHERWISE, STANDARD HOOKS ARE TO BE USED.
6. "H" DIMENSION ON STIRRUPS TO BE SHOWN ONLY WHEN NECESSARY TO MAINTAIN CLEARANCES.
7. WHERE SLOPE DIFFERS FROM 45 DEGREES, DIMENSIONS "H" AND "K" MUST BE SHOWN.
8. ▲ DENOTES BARS TO BE CUT IN FIELD.
9. ✳ DENOTES ONE EXTRA BAR ADDED FOR TESTING PURPOSES.
10. △ DENOTES TWO EXTRA BARS ADDED FOR TESTING PURPOSES.
11. E IN BAR MARK PREFIX DENOTES EPOXY COATED REINFORCING STEEL.

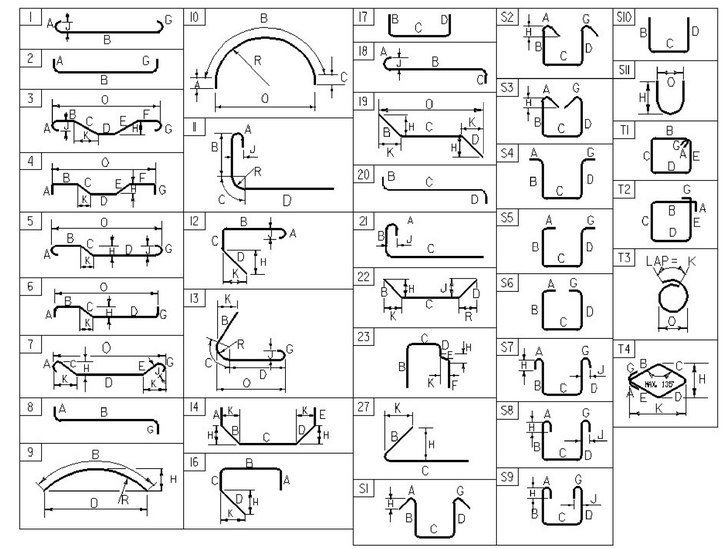

ASTM STANDARD REINFORCING BARS

BAR SIZE DESIGNATION	WEIGHT POUNDS PER FOOT	NOMINAL DIMENSIONS ROUND SECTION		
		DIAMETER INCHES	AREA INCHES^2	PERIMETER INCHES
#3	0.376	0.375	0.11	1.178
#4	0.668	0.500	0.20	1.571
#5	1.043	0.625	0.31	1.963
#6	1.502	0.750	0.44	2.356
#7	2.044	0.875	0.60	2.749
#8	2.670	1.000	0.79	3.142
#9	3.400	1.128	1.00	3.544
#10	4.303	1.270	1.27	3.990
#11	5.313	1.410	1.56	4.430
#14	7.65	1.693	2.25	5.32
#18	13.60	2.257	4.00	7.09

REVISION	DATE	DESCRIPTION	BY
△1	01-07-2015	REINFORCING STEEL SCHEDULE UPDATE, ADDED TEST BARS	WDL

PROJECT NAME: **HARTFORD**
PROJECT NUMBER: **IM 091-2 (79)**

FILE NAME: **s12a132RSS_AB2.dgn** PLOT DATE: **1/7/2015**
PROJECT MANAGER: **K.HIGGINS** DRAWN BY: **G. LAROCHE**
DESIGNED BY: **G. LAROCHE** CHECKED BY: **J.SALVATORI**
REINFORCING STEEL SCHEDULE ABUTMENT 2 SHEET **128** OF **166**

STATE OF VERMONT
AGENCY OF TRANSPORTATION

△1 REINFORCING STEEL SCHEDULE

ITEM	EACH	SIZE	LENGTH	MARK	TYPE	A	B	C	D	E	F	G	H	J	K	R	O
ABUTMENT 3:																	
	48	5	32'- 11"	3A501	STR												
✳	92	5	5'- 2"	3A502	STR												
▲	91	5	16'- 3"	3A503	STR												
	92	5	32'- 7"	3A504	STR												
	87	5	7'- 5"	3A507	17		2'- 5"	2'- 7"	2'- 5"								
	24	5	12'- 11"	3A508	16	2'- 5"	4'- 7"	1'- 2"	4'- 9"				1'- 0"		1'- 0"		
✳	207	7	10'- 6"	3A701	STR												
▲	85	7	16'- 3"	3A702	STR												
	81	8	15'- 3"	3A801	17		5'- 6"	9'- 9"									
▲	28	5	10'- 0"	3A505.3	STR												
▲	28	5	13'- 3"	3A506.3	19		4'- 9"	8'- 6"					1'- 0"		1'- 0"		
	23	5	6'- 5"	3A509.3	17		2'- 5"	1'- 7"	2'- 5"								
	22	5	8'- 0"	3A510.3	STR												
	16	5	8'- 0"	3A511.3	STR												
	2	5	5'- 7"	3A512.3	19		3'- 8"	1'- 11"					1'- 8"		3'- 3"		
WW5:																	
	6	5	7'- 5"	5W501	17		2'- 5"	2'- 7"	2'- 5"								
	16	5	5'- 2"	5W502	STR												
	29	5	16'- 9"	5W503	STR												
	46	5	11'- 2"	5W505	STR												
	23	5	17'- 7"	5W508	22		2'- 4"	11'- 10"	2'- 4"				1'- 4"	1'- 4"	1'- 10"	1'- 10"	
	23	5	4'- 10"	5W509	19		2'- 5"	2'- 5"					2'- 4"		0'- 9"		
✳	27	5	6'- 3"	5W504.3	STR												
	12	5	8'- 0"	5W506.3	STR												
	13	5	7'- 5"	5W507.3	17		2'- 5"	2'- 7"	2'- 5"								
	12	5	4'- 10"	5W510.3	19		2'- 5"	2'- 5"					2'- 4"		0'- 9"		
WW6:																	
	24	5	12'- 11"	6W501	STR												
	17	5	5'- 2"	6W502	STR												
	17	5	12'- 10"	6W503	STR												
	38	5	11'- 4"	6W504	STR												
	19	5	18'- 11"	6W509	22		2'- 3"	14'- 5"	2'- 3"				1'- 0"	1'- 0"	2'- 0"	2'- 0"	
	19	5	4'- 10"	6W510	19		2'- 5"	2'- 5"					1'- 11"		1'- 4"		
	41	7	10'- 6"	6W701	STR												
	21	7	12'- 10"	6W702	STR												
✳	22	8	14'- 3"	6W801	17		5'- 6"	8'- 9"									
▲	29	5	9'- 6"	6W505.3	STR												
▲	12	5	7'- 5"	6W506.3	17		2'- 5"	2'- 7"	2'- 5"								
▲	22	5	7'- 8"	6W507.3	STR												
	2	5	9'- 7"	6W508.3	19		0'- 10"	8'- 9"					0'- 6"		0'- 8"		
	28	5	4'- 10"	6W511.3	19		2'- 5"	2'- 5"					1'- 11"		1'- 4"		

~ NOTES ~

1. UNLESS OTHERWISE DESIGNATED, ALL BAR REINFORCEMENT FOR CONCRETE IN SIZES UP TO AND INCLUDING NO. 18 SHALL CONFORM TO THE REQUIREMENTS OF THE "SPECIFICATIONS FOR DEFORMED BILLET-STEEL BARS FOR CONCRETE REINFORCEMENT", AASHTO M 31 (ASTM A 615-SI). ALL BARS SHALL BE GRADE 60, UNLESS OTHERWISE DESIGNATED.
2. FOR TYPICAL BENDING DETAILS, RECOMMENDED PIN DIAMETER "D" OF BENDS AND HOOKS, AND OTHER STANDARD PRACTICE, SEE CURRENT CONCRETE REINFORCING STEEL INSTITUTE "MANUAL OF STANDARD PRACTICE".
3. BARS WHICH REQUIRE MORE ACCURATE BENDING THAN STANDARD PRACTICES SHOULD HAVE LIMITS INDICATED.
4. ALL DIMENSIONS ARE OUT TO OUT OF BAR EXCEPT "A" AND "G" ON STANDARD 180 DEGREE AND 135 DEGREE HOOKS.
5. "J" DIMENSION ON 180 DEGREE HOOKS TO BE SHOWN ONLY WHERE NECESSARY TO RESTRICT HOOK SIZE. OTHERWISE, STANDARD HOOKS ARE TO BE USED.
6. "H" DIMENSION ON STIRRUPS TO BE SHOWN ONLY WHEN NECESSARY TO MAINTAIN CLEARANCES.
7. WHERE SLOPE DIFFERS FROM 45 DEGREES, DIMENSIONS "H" AND "K" MUST BE SHOWN.
8. ▲ DENOTES BARS TO BE CUT IN FIELD.
9. ✳ DENOTES ONE EXTRA BAR ADDED FOR TESTING PURPOSES.
10. △ DENOTES TWO EXTRA BARS ADDED FOR TESTING PURPOSES.
11. E IN BAR MARK PREFIX DENOTES EPOXY COATED REINFORCING STEEL.

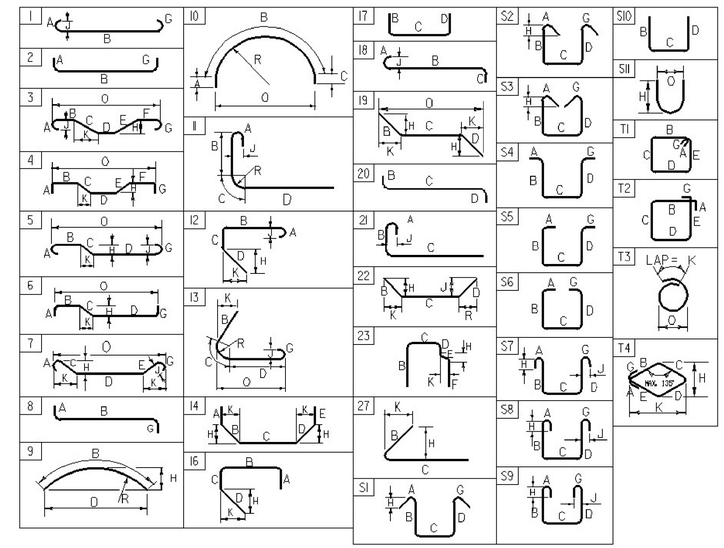

ASTM STANDARD REINFORCING BARS

BAR SIZE DESIGNATION	WEIGHT POUNDS PER FOOT	NOMINAL DIMENSIONS ROUND SECTION		
		DIAMETER INCHES	AREA INCHES^2	PERIMETER INCHES
#3	0.376	0.375	0.11	1.178
#4	0.668	0.500	0.20	1.571
#5	1.043	0.625	0.31	1.963
#6	1.502	0.750	0.44	2.356
#7	2.044	0.875	0.60	2.749
#8	2.670	1.000	0.79	3.142
#9	3.400	1.128	1.00	3.544
#10	4.303	1.270	1.27	3.990
#11	5.313	1.410	1.56	4.430
#14	7.65	1.693	2.25	5.32
#18	13.60	2.257	4.00	7.09

REVISION	DATE	DESCRIPTION	BY
△1	01-07-2015	REINFORCING STEEL SCHEDULE UPDATE, ADDED TEST BARS	WDL

PROJECT NAME: **HARTFORD**
PROJECT NUMBER: **IM 091-2 (79)**

FILE NAME: **s12a132RSS_AB3.dgn** PLOT DATE: **1/7/2015**
PROJECT MANAGER: **K. HIGGINS** DRAWN BY: **G. LAROCHE**
DESIGNED BY: **G. LAROCHE** CHECKED BY: **W. LAMMER**
REINFORCING STEEL SCHEDULE ABUTMENT 3 SHEET **129** OF **166**

STATE OF VERMONT
AGENCY OF TRANSPORTATION

△1 REINFORCING STEEL SCHEDULE

ITEM	EACH	SIZE	LENGTH	MARK	TYPE	A	B	C	D	E	F	G	H	J	K	R	O
ABUTMENT 4:																	
	32	5	33'- 8"	4A501	STR												
✳	94	5	5'- 2"	4A502	STR												
▲	93	5	19'- 4"	4A503	STR												
	108	5	32'- 11"	4A504	STR												
	88	5	7'- 5"	4A507	17		2'- 5"	2'- 7"	2'- 5"								
	17	5	12'- 11"	4A508	16	2'- 5"	4'- 7"	1'- 2"	4'- 9"				1'- 0"		1'- 0"		
✳	133	7	8'- 6"	4A701	STR												
▲	83	7	19'- 4"	4A702	STR												
✳	84	8	14'- 4"	4A801	17		4'- 7"	9'- 9"									
✳ ▲	25	5	9'- 11"	4A505.3	STR												
▲	17	5	13'- 2"	4A506.3	19		4'- 9"	8'- 5"					1'- 0"		1'- 0"		
	24	5	6'- 5"	4A509.3	17		2'- 5"	1'- 7"	2'- 5"								
	22	5	6'- 8"	4A510.3	STR												
▲	18	5	7'- 9"	4A511.3	STR												
	2	5	5'- 3"	4A512.3	19		2'- 1"	3'- 2"					1'- 0"		1'- 9"		
✳ ▲	13	9	40'- 0"	4A901.3	STR												
WW7:																	
	6	5	7'- 5"	7W501	17		2'- 5"	2'- 7"	2'- 5"								
	14	5	5'- 2"	7W502	STR												
	32	5	19'- 4"	7W503	STR												
▲	54	5	11'- 1"	7W505	STR												
	27	5	13'- 5"	7W508	22		2'- 5"	8'- 7"	2'- 5"				1'- 11"	1'- 11"	1'- 4"	1'- 4"	
	27	5	5'- 6"	7W509	27		2'- 9"	2'- 9"					2'- 6"		0'- 11"		
	24	5	6'- 5"	7W504.3	STR												
▲	12	5	7'- 9"	7W506.3	STR												
	12	5	7'- 5"	7W507.3	17		2'- 5"	2'- 7"	2'- 5"								
	18	5	5'- 6"	7W510.3	27		2'- 9"	2'- 9"					2'- 6"		0'- 11"		
WW8:																	
	16	5	12'- 6"	8W501	STR												
	17	5	5'- 2"	8W502	STR												
	17	5	15'- 4"	8W503	STR												
	44	5	11'- 9"	8W504	STR												
	24	5	21'- 3"	8W509	22		2'- 3"	16'- 9"	2'- 3"				0'- 10"	0'- 10"	2'- 1"	2'- 1"	
	24	5	4'- 8"	8W510	19		2'- 4"	2'- 4"					1'- 0"		1'- 0"		
	27	7	8'- 6"	8W701	STR												
	22	7	15'- 4"	8W702	STR												
	22	8	13'- 4"	8W801	17		4'- 7"	8'- 9"									
▲	29	5	9'- 5"	8W505.3	STR												
	13	5	7'- 5"	8W506.3	17		2'- 5"	2'- 7"	2'- 5"								
▲	22	5	7'- 7"	8W507.3	STR												
	2	5	7'- 11"	8W508.3	19		0'- 7"	7'- 4"					0'- 2"		0'- 6"		
	16	5	4'- 8"	8W511.3	19		2'- 4"	2'- 4"					1'- 0"		1'- 0"		

~ NOTES ~

1. UNLESS OTHERWISE DESIGNATED, ALL BAR REINFORCEMENT FOR CONCRETE IN SIZES UP TO AND INCLUDING NO. 18 SHALL CONFORM TO THE REQUIREMENTS OF THE "SPECIFICATIONS FOR DEFORMED BILLET-STEEL BARS FOR CONCRETE REINFORCEMENT", AASHTO M 31 (ASTM A 615-SI). ALL BARS SHALL BE GRADE 60, UNLESS OTHERWISE DESIGNATED.
2. FOR TYPICAL BENDING DETAILS, RECOMMENDED PIN DIAMETER "D" OF BENDS AND HOOKS, AND OTHER STANDARD PRACTICE, SEE CURRENT CONCRETE REINFORCING STEEL INSTITUTE "MANUAL OF STANDARD PRACTICE".
3. BARS WHICH REQUIRE MORE ACCURATE BENDING THAN STANDARD PRACTICES SHOULD HAVE LIMITS INDICATED.
4. ALL DIMENSIONS ARE OUT TO OUT OF BAR EXCEPT "A" AND "G" ON STANDARD 180 DEGREE AND 135 DEGREE HOOKS.
5. "J" DIMENSION ON 180 DEGREE HOOKS TO BE SHOWN ONLY WHERE NECESSARY TO RESTRICT HOOK SIZE. OTHERWISE, STANDARD HOOKS ARE TO BE USED.
6. "H" DIMENSION ON STIRRUPS TO BE SHOWN ONLY WHEN NECESSARY TO MAINTAIN CLEARANCES.
7. WHERE SLOPE DIFFERS FROM 45 DEGREES, DIMENSIONS "H" AND "K" MUST BE SHOWN.
8. ▲ DENOTES BARS TO BE CUT IN FIELD.
9. ✳ DENOTES ONE EXTRA BAR ADDED FOR TESTING PURPOSES.
10. △ DENOTES TWO EXTRA BARS ADDED FOR TESTING PURPOSES.
11. E IN BAR MARK PREFIX DENOTES EPOXY COATED REINFORCING STEEL.

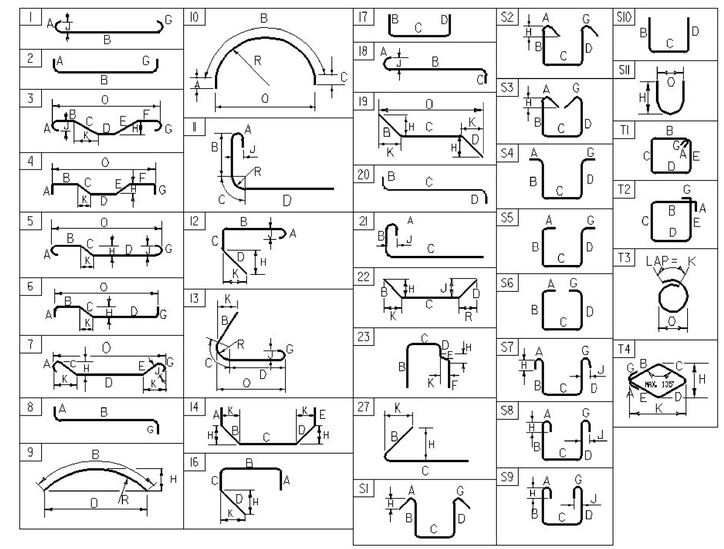

ASTM STANDARD REINFORCING BARS

BAR SIZE DESIGNATION	WEIGHT POUNDS PER FOOT	NOMINAL DIMENSIONS ROUND SECTION		
		DIAMETER INCHES	AREA INCHES^2	PERIMETER INCHES
#3	0.376	0.375	0.11	1.178
#4	0.668	0.500	0.20	1.571
#5	1.043	0.625	0.31	1.963
#6	1.502	0.750	0.44	2.356
#7	2.044	0.875	0.60	2.749
#8	2.670	1.000	0.79	3.142
#9	3.400	1.128	1.00	3.544
#10	4.303	1.270	1.27	3.990
#11	5.313	1.410	1.56	4.430
#14	7.65	1.693	2.25	5.32
#18	13.60	2.257	4.00	7.09

REVISION	DATE	DESCRIPTION	BY
△1	01-07-2015	REINFORCING STEEL SCHEDULE UPDATE, ADDED TEST BARS	WDL

PROJECT NAME: **HARTFORD**
PROJECT NUMBER: **IM 091-2 (79)**

FILE NAME: **s12a132RSS_AB4.dgn** PLOT DATE: **1/7/2015**
PROJECT MANAGER: **K. HIGGINS** DRAWN BY: **G. LAROCHE**
DESIGNED BY: **G. LAROCHE** CHECKED BY: **J. GRIGAS**
REINFORCING STEEL SCHEDULE ABUTMENT 4 SHEET **130** OF **166**

STATE OF VERMONT
AGENCY OF TRANSPORTATION

△1 REINFORCING STEEL SCHEDULE

ITEM	EACH	SIZE	LENGTH	MARK	TYPE	A	B	C	D	E	F	G	H	J	K	R	O
	30	5	8'- 6"	1R501A	STR												
	14	5	9'- 6"	1R501B	STR												
	29	5	4'- 2"	1R502	STR												
	36	5	7'- 6"	1R503	STR												
	20	5	7'- 9"	1R504	S10		3'- 7"	4'- 2"	---								
▲	9	5	19'- 4"	1R505A	STR												
▲	9	5	14'- 0"	1R505B	STR												
▲	11	5	8'- 7"	1R505C	STR												
▲	9	5	14'- 0"	1R506A	STR												
▲	11	5	8'- 7"	1R506B	STR												
▲	26	5	25'- 6"	1R507A	STR												
	2	5	26'- 6"	1R507B	STR												
	10	5	8'- 7"	1R508	19		2'- 2"	4'- 3"	2'- 2"				1'- 7"		1'- 7"		7'- 3"
	18	5	7'- 4"	1R509	20		2'- 2"	3'- 0"	2'- 2"								
	29	5	5'- 11"	1R510	S10		2'- 2"	1'- 7"	2'- 2"								
	16	7	8'- 0"	1R701	S10		3'- 7"	4'- 5"	---								
▲	16	7	19'- 4"	1R702	STR												
	16	8	9'- 6"	1R801	STR												
	32	5	8'- 6"	2R501A	STR												
	14	5	12'- 6"	2R501B	STR												
	32	5	4'- 2"	2R502	STR												
	14	5	7'- 6"	2R503	STR												
	14	5	7'- 9"	2R504	S10		3'- 7"	4'- 2"	---								
	9	5	16'- 7"	2R505A	STR												
	9	5	12'- 1"	2R505B	STR												
	14	5	7'- 7"	2R505C	STR												
	14	5	7'- 7"	2R506	STR												
	10	5	7'- 6"	2R507A	STR												
	10	5	15'- 6"	2R507B	STR												
	18	5	28'- 6"	2R507C	STR												
	10	5	10'- 9"	2R508	19		2'- 2"	6'- 5"	2'- 2"				1'- 7"		1'- 7"		9'- 5"
	20	5	8'- 10"	2R509	20		2'- 2"	4'- 6"	2'- 2"								
	32	5	5'- 11"	2R510	S10		2'- 2"	1'- 7"	2'- 2"								
✳	33	6	8'- 2"	2R601	S10		3'- 7"	4'- 7"	---								
	16	6	16'- 7"	2R602A	STR												
	16	6	12'- 1"	2R602B	STR												
	32	7	9'- 6"	2R701	STR												
	16	5	8'- 6"	3R501A	STR												
	14	5	12'- 6"	3R501B	STR												
	23	5	4'- 2"	3R502	STR												
	26	5	7'- 6"	3R503	STR												
	14	5	7'- 9"	3R504	S10		3'- 7"	4'- 2"	---								
▲	9	5	19'- 1"	3R505A	STR												
▲	14	5	12'- 11"	3R505B	STR												
▲	14	5	12'- 11"	3R506	STR												
▲	32	5	20'- 6"	3R507A	STR												
	2	5	22'- 2"	3R507B	STR												
	5	5	8'- 7"	3R508	19		2'- 2"	4'- 3"	2'- 2"				1'- 7"		1'- 7"		7'- 4"
	9	5	7'- 4"	3R509	20		2'- 2"	3'- 0"	2'- 2"								
	23	5	5'- 11"	3R510	S10		2'- 2"	1'- 7"	2'- 2"								
	16	7	9'- 0"	3R701	S10		3'- 7"	5'- 5"	---								
	16	7	19'- 1"	3R702	STR												
▲	16	8	9'- 6"	3R801	STR												
	34	5	8'- 6"	4R501A	STR												
	15	5	12'- 6"	4R501B	STR												
	32	5	4'- 2"	4R502	STR												
	14	5	7'- 9"	4R504	S10		3'- 7"	4'- 2"	---								
▲	9	5	17'- 8"	4R505A	STR												
▲	9	5	13'- 3"	4R505B	STR												
▲	14	5	8'- 9"	4R505C	STR												
▲	14	5	8'- 9"	4R506	STR												
	10	5	7'- 6"	4R507A	STR												
	10	5	15'- 6"	4R507B	STR												
	22	5	28'- 6"	4R507C	STR												
	10	5	10'- 0"	4R508	19		2'- 2"	5'- 8"	2'- 2"				1'- 7"		1'- 7"		8'- 9"
	22	5	8'- 4"	4R509	20		2'- 2"	4'- 0"	2'- 2"								
	32	5	5'- 11"	4R510	S10		2'- 2"	1'- 7"	2'- 2"								
	32	6	8'- 2"	4R601	S10		3'- 7"	4'- 7"	---								
▲	16	6	17'- 8"	4R602A	STR												
▲	16	6	13'- 3"	4R602B	STR												
	14	6	7'- 6"	4R603	STR												
	32	8	10'- 6"	4R801	STR												
	32	5	8'- 6"	5R501A	STR												
	14	5	5'- 6"	5R501B	STR												
	25	5	4'- 2"	5R502	STR												
	32	5	9'- 6"	5R503A	STR												
	12	5	7'- 6"	5R503B	STR												
	12	5	7'- 9"	5R504	S10		3'- 7"	4'- 2"	---								
▲	9	5	14'- 4"	5R505A	STR												
▲	9	5	10'- 7"	5R505B	STR												
▲	7	5	6'- 10"	5R505C	STR												
	12	5	6'- 10"	5R506	STR												

ITEM	EACH	SIZE	LENGTH	MARK	TYPE	A	B	C	D	E	F	G	H	J	K	R	O
	8	5	7'- 6"	5R507A	STR												
	8	5	15'- 6"	5R507B	STR												
	16	5	21'- 6"	5R507C	STR												
	10	5	9'- 3"	5R508	19		2'- 2"	4'- 11"	2'- 2"				1'- 7"		1'- 7"		8'- 0"
	20	5	7'- 10"	5R509	20		2'- 2"	3'- 6"	2'- 2"								
	25	5	5'- 11"	5R510	S10		2'- 2"	1'- 7"	2'- 2"								
✳	33	6	8'- 2"	5R601	S10		3'- 7"	4'- 7"									
▲	16	6	14'- 4"	5R602A	STR												
▲	16	6	10'- 7"	5R602B	STR												
▲	47	5	6'- 6"	6R501A	STR												
	2	5	7'- 0"	6R501B	STR												
	8	5	4'- 2"	6R502	STR												
▲	22	5	8'- 11"	6R503	STR												
	14	5	7'- 9"	6R504	S10		3'- 7"	4'- 2"	---								
	8	5	5'- 11"	6R505	S10		2'- 2"	1'- 7"	2'- 2"								
	32	5	8'- 6"	7R501A	STR												
	14	5	10'- 6"	7R501B	STR												
	30	5	4'- 2"	7R502	STR												
	22	5	8'- 0"	7R503	STR												
	22	5	7'- 9"	7R504	S10		3'- 7"	4'- 2"	---								
	9	5	16'- 8"	7R505A	STR												
	9	5	12'- 4"	7R505B	STR												
	12	5	7'- 11"	7R505C	STR												
	22	5	7'- 11"	7R506	STR												
	10	5	7'- 6"	7R507A	STR												
	10	5	15'- 6"	7R507B	STR												
	20	5	26'- 6"	7R507C	STR												
	10	5	10'- 0"	7R508	19		2'- 2"	5'- 8"	2'- 2"				1'- 7"		1'- 7"		8'- 9"
	20	5	8'- 4"	7R509	20		2'- 2"	4'- 0"	2'- 2"								
	30	5	5'- 11"	7R510	S10		2'- 2"	1'- 7"	2'- 2"								
	32	6	9'- 6"	7R601	STR												
	32	8	10'- 1"	7R801	S10		3'- 7"	6'- 6"	---								
	16	8	16'- 8"	7R802A	STR												
	16	8	12'- 4"	7R802B	STR												
	44	5	8'- 6"	8R501A	STR												
	14	5	10'- 6"	8R501B	STR												
	9	5	5'- 2"	8R502A	STR												
	30	5	4'- 2"	8R502B	STR												
	54	5	7'- 6"	8R503	STR												
	30	5	7'- 9"	8R504	S10		3'- 7"	4'- 2"	---								
▲	9	5	17'- 11"	8R505A	STR												
▲	9	5	15'- 3"	8R505B	STR												
▲	9	5	11'- 7"	8R505C	STR												
▲	12	5	8'- 0"	8R505D	STR												
▲	16	5	15'- 3"	8R506A	STR												
▲	16	5	11'- 7"	8R506B	STR												
▲	22	5	8'- 0"	8R506C	STR												
▲	8	5	15'- 6"	8R507A	STR												
	6	5	23'- 6"	8R507B	STR												
▲	26	5	34'- 6"	8R507C	STR												
	2	5	35'- 3"	8R507D	STR												
	15	5	7'- 2"	8R508	19		2'- 2"	2'- 10"	2'- 2"				1'- 7"		1'- 7"		5'- 8"
	11	5	5'- 4"	8R509A	20		2'- 2"	1'- 0"	2'- 2"								
	18	5	6'- 4"	8R509B	20		2'- 2"	2'- 0"	2'- 2"								
	39	5	5'- 11"	8R510	S10		2'- 2"	1'- 7"	2'- 2"								
	16	6	9'- 6"	8R601	STR												
	16	7	10'- 0"	8R701	S10		3'- 7"	6'- 5"	---								
▲	16	7	17'- 11"	8R702	STR												

~ NOTES ~

1. UNLESS OTHERWISE DESIGNATED, ALL BAR REINFORCEMENT FOR CONCRETE IN SIZES UP TO AND INCLUDING NO. 18 SHALL CONFORM TO THE REQUIREMENTS OF THE "SPECIFICATIONS FOR DEFORMED BILLET-STEEL BARS FOR CONCRETE REINFORCEMENT", AASHTO M 31 (ASTM A 615-SI). ALL BARS SHALL BE GRADE 60, UNLESS OTHERWISE DESIGNATED.
2. FOR TYPICAL BENDING DETAILS, RECOMMENDED PIN DIAMETER "D" OF BENDS AND HOOKS, AND OTHER STANDARD PRACTICE, SEE CURRENT CONCRETE REINFORCING STEEL INSTITUTE "MANUAL OF STANDARD PRACTICE".
3. BARS WHICH REQUIRE MORE ACCURATE BENDING THAN STANDARD PRACTICES SHOULD HAVE LIMITS INDICATED.
4. ALL DIMENSIONS ARE OUT TO OUT OF BAR EXCEPT "A" AND "G" ON STANDARD 180 DEGREE AND 135 DEGREE HOOKS.
5. "J" DIMENSION ON 180 DEGREE HOOKS TO BE SHOWN ONLY WHERE NECESSARY TO RESTRICT HOOK SIZE. OTHERWISE, STANDARD HOOKS ARE TO BE USED.
6. "H" DIMENSION ON STIRRUPS TO BE SHOWN ONLY WHEN NECESSARY TO MAINTAIN CLEARANCES.
7. WHERE SLOPE DIFFERS FROM 45 DEGREES, DIMENSIONS "H" AND "K" MUST BE SHOWN.
8. ▲ DENOTES BARS TO BE CUT IN FIELD.
9. ✳ DENOTES ONE EXTRA BAR ADDED FOR TESTING PURPOSES.
10. △ DENOTES TWO EXTRA BARS ADDED FOR TESTING PURPOSES.
11. E IN BAR MARK PREFIX DENOTES EPOXY COATED REINFORCING STEEL.

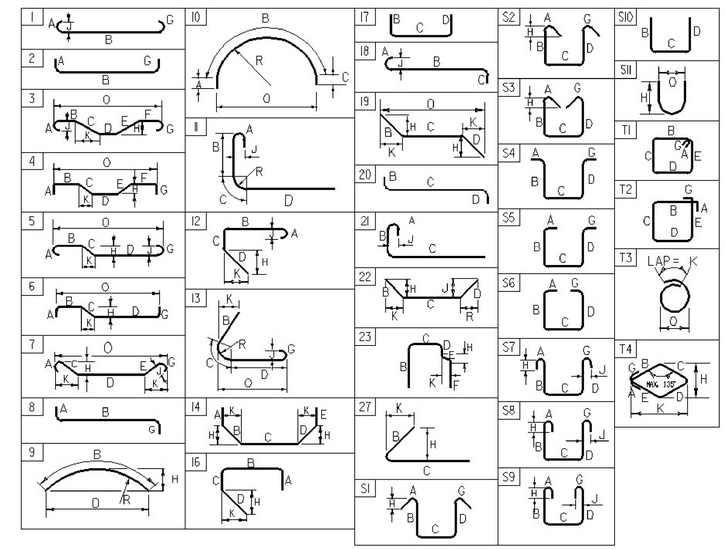

ASTM STANDARD REINFORCING BARS

BAR SIZE DESIGNATION	WEIGHT POUNDS PER FOOT	NOMINAL DIMENSIONS ROUND SECTION DIAMETER INCHES	AREA INCHES 2	PERIMETER INCHES
#3	0.376	0.375	0.11	1.178
#4	0.668	0.500	0.20	1.571
#5	1.043	0.625	0.31	1.963
#6	1.502	0.750	0.44	2.356
#7	2.04	0.875	0.60	2.749
#8	2.670	1.000	0.79	3.14
#9	3.400	1.13	1.00	3.54
#10	4.3	1.270	1.27	3.990
#11	5.31	1.410	1.56	4.430
#14	7.65	1.69	2.25	5.32
#18	13.60	2.26	4.00	7.09

~ REINFORCING STEEL CORROSION RESISTANCE LEVEL ~

THE REINFORCING STEEL MARKS IN THIS SCHEDULE INDICATE THE REQUIRED BAR CORROSION RESISTANCE LEVEL. CORROSION RESISTANCE LEVEL IS DENOTED WITH A .2 FOR LEVEL TWO SUFFIX OR .3 FOR LEVEL THREE SUFFIX, .1 FOR LEVEL ONE IS TO BE OMITTED. THE BAR MATERIAL TYPE AND BAR STEEL GRADE PROVIDED FOR EACH CORROSION LEVEL WILL BE RECORDED ON THE PLAN SET PI SHEET FOR AS-BUILT RECORD PLAN ARCHIVES.

REVISION	DATE	DESCRIPTION	BY
△1	01-07-2015	REINFORCING STEEL SCHEDULE UPDATE, ADDED TEST BARS	WDL

PROJECT NAME: **HARTFORD**
PROJECT NUMBER: **IM 091-2 (79)**

FILE NAME: **s12a132RSS_RetWalls.dgn**
PROJECT MANAGER: **K. HIGGINS**
DESIGNED BY: **W. LAMMER**
REINFORCING STEEL SCHEDULE RET WALLS

PLOT DATE: **1/7/2015**
DRAWN BY: **K. FRIEDLAND**
CHECKED BY: **W. LAMMER**
SHEET **131** OF **166**

EPSC PLAN NARRATIVE

1.1 PROJECT DESCRIPTION

THIS PROJECT INVOLVES THE REMOVAL OF BRIDGE 43N AND 43S ON INTERSTATE 91 OVER US-5 AND LOCATED IN THE TOWN OF HARTFORD, VT. BRIDGES 43N AND 43S WILL BE REPLACED WITH SINGLE SPAN BRIDGES. BOTH BRIDGES WILL BE BUILT ON THE EXISTING ALIGNMENT. BRIDGE 43N AND 43S WILL BOTH BE APPROXIMATELY 136 FEET IN LENGTH.

NOTE: AREA OF DISTURBANCE INCLUDES LIMITS OF EARTH DISTURBANCE WITHIN THE PROJECT AREA, AS WELL AS WASTE, BORROW AND STAGING AREAS, AND OTHER EARTH DISTURBING ACTIVITIES WITHIN OR DIRECTLY ADJACENT TO THE PROJECT LIMITS AS SHOWN ON THE ATTACHED EPSC PLAN.

TOTAL AREA OF DISTURBANCE AS SHOWN ON THE ATTACHED EPSC PLAN IS APPROXIMATELY 4.63 ACRES.

IT IS ANTICIPATED THAT THIS PROJECT WILL LAST ONE CONSTRUCTION SEASON.

1.2 SITE INVENTORY

1.2.1 TOPOGRAPHY

THE TOPOGRAPHY OF THE AREA IS SLOPING OPEN GROUND WITH SOME AREAS THAT ARE GENTLY SLOPING TO NEARLY FLAT. INTERSTATE 91 AND US-5 ARE RELATIVELY FLAT BUT WITH SLOPING AREAS BETWEEN THE TWO CORRIDORS.

1.2.2 DRAINAGE, WATERWAYS, BODIES OF WATER, AND PROXIMITY TO NATURAL OR MAN-MADE WATER FEATURES

THERE ARE NUMEROUS EXISTING AND PROPOSED DRAINAGE SYSTEMS WITHIN THE PROJECT LIMITS, INCLUDING CULVERTS, DROP INLETS, STONE LINED DITCHES AND GRASS SWALES. SOME CULVERTS AND DRAINAGE DITCHES WITHIN THE PROJECT LIMITS DRAIN TO AN EXISTING STORM WATER RETENTION POND OUTSIDE OF THE PROJECT LIMITS. FOR DETAILS SEE THE DRAINAGE LAYOUT SHEET.

1.2.3 VEGETATION

THE VEGETATION IN THE PROJECT AREA CONSISTS OF MOWED GRASSES.

1.2.4 SOILS

ALL SOIL DATA CAME FROM THE U.S. DEPARTMENT OF AGRICULTURE SOIL CONSERVATION SERVICE FOR THE COUNTY OF WINDSOR, VERMONT.

GLOVER VERSHIRE COMPLEX	15% - 35% SLOPES	"K" FACTOR = 0.32 - 0.28
URBAN LAND WINDSOR-AGAWAM COMPLEX	0% - 8% SLOPES	"K" FACTOR = 0.17 - 0.28

NOTE: K-VALUES GENERALLY INDICATE THE FOLLOWING:
0.0-0.23 = LOW EROSION POTENTIAL
0.24-0.36 = MODERATE EROSION POTENTIAL
0.37 AND HIGHER = HIGH EROSION POTENTIAL

1.2.5 SENSITIVE RESOURCE AREAS

CRITICAL HABITATS: NO
HISTORICAL OR ARCHEOLOGICAL AREAS: NO
PRIME AGRICULTURAL LAND: NO
THREATENED AND ENDANGERED SPECIES: NO
WATER RESOURCE: NO
WETLANDS: NO

1.3 RISK EVALUATION

THIS PROJECT FALLS UNDER THE JURISDICTION OF GENERAL PERMIT 3-9020 FOR STORMWATER RUNOFF FROM CONSTRUCTION SITES FOR LOW RISK PROJECTS. ANY MODIFICATIONS TO THE PROJECT THAT INCREASE THE RISK TO ENVIRONMENTAL RESOURCES SHALL BE EVALUATED IN ACCORDANCE WITH THE PERMIT REQUIREMENTS. THE CONTRACTOR WILL BE RESPONSIBLE FOR ANY ADDITIONAL PERMITTING.

1.4 EROSION PREVENTION AND SEDIMENT CONTROL

THE EROSION CONTROL PLANS ARE MEANT AS A GUIDELINE FOR PREVENTING EROSION AND CONTROLLING SEDIMENT TRANSPORT. THE PRINCIPLES OUTLINED IN THIS NARRATIVE CONSIST OF APPLYING MEASURES THROUGHOUT CONSTRUCTION OF THE PROJECT IN ORDER TO MINIMIZE SEDIMENT TRANSPORT TO THE RECEIVING WATERS. THE MEASURES INCLUDE STABILIZATION AND STRUCTURAL PRACTICES, STORM WATER CONTROLS AND OTHER POLLUTION PREVENTION PRACTICES. THEY HAVE BEEN PROPOSED BY THE DESIGNER AS A BASIS FOR PROTECTING RESOURCES AND WILL NEED TO BE BUILT UPON BASED ON THE SPECIFIC MEANS AND METHODS OF THE CONTRACTOR. REFER TO THE LOW RISK SITE HANDBOOK AND APPROPRIATE DETAIL SHEETS FOR SPECIFIC GUIDANCE AND CONSTRUCTION DETAILING.

ALL MEASURES SHALL BE REGULARLY MAINTAINED AND SHALL BE CHECKED FOR SEDIMENT BUILD-UP. SEDIMENT SHALL BE DISPOSED OF AT AN APPROVED SITE WHERE IT WILL NOT BE SUBJECT TO EROSION.

1.4.1 MARK SITE BOUNDARIES

SITE BOUNDARIES AND AREAS CONSTRUCTION EQUIPMENT CAN ACCESS SHALL BE DELINEATED.

BARRIER FENCE (BF) SHALL BE USED TO PHYSICALLY MARK SITE BOUNDARIES.

1.4.2 LIMIT DISTURBANCE AREA

PREVENTING INITIAL SOIL EROSION BY MINIMIZING THE EXPOSED AREA IS MUCH MORE EFFECTIVE THAN TREATING ERODED SEDIMENT. EARTH DISTURBANCE CAN BE MINIMIZED THROUGH CONSTRUCTION PHASING BY ONLY OPENING UP EARTH AS NECESSARY. THIS CAN LIMIT THE AREA THAT WILL BE DISTURBED AND EXPOSED TO EROSION. EMPLOY TEMPORARY CONSTRUCTION STABILIZATION PRACTICES IN INCREMENTAL STAGES AS PHASES CHANGE. FOR PROJECTS WHICH FALL UNDER THE CONSTRUCTION GENERAL PERMIT, ONLY THE ACREAGE LISTED ON THE PERMIT AUTHORIZATION MAY BE EXPOSED AT ANY GIVEN TIME.

MAINTAINING VEGETATED BUFFERS ALONG STREAM BANKS, WETLANDS OR OTHER SENSITIVE AREAS IS A CRUCIAL EROSION AND SEDIMENT CONTROL MEASURE THAT SHOULD BE ESTABLISHED WHEREVER POSSIBLE.

1.4.3 SITE ENTRANCE/EXIT STABILIZATION

TRACKING OF SEDIMENT ONTO PUBLIC HIGHWAYS SHALL BE MINIMIZED TO REDUCE THE POTENTIAL FOR RUNOFF ENTERING RECEIVING WATERS. INSTALLATION SHALL COINCIDE WITH THE CONTRACTORS PROGRESS SCHEDULE.

STABILIZED CONSTRUCTION ENTRANCES SHALL BE INSTALLED AS PROPOSED ON THE EPSC PLAN AND ANYWHERE EQUIPMENT WILL BE GOING FROM AREAS OF EXPOSED SOILS TO PAVED SURFACES.

1.4.4 INSTALL SEDIMENT BARRIERS

SEDIMENT BARRIERS SHALL BE UTILIZED TO INTERCEPT RUNOFF AND ALLOW SUSPENDED SEDIMENT TO SETTLE OUT. THEY SHALL BE INSTALLED PRIOR TO ANY UP SLOPE WORK.

FILTER FABRIC DROP INLET PROTECTION SHALL BE INSTALLED AS PROPOSED ON THE EPSC PLANS.

SILT FENCE WILL BE INSTALLED AS PROPOSED ON THE EPSC PLAN.

1.4.5 DIVERT UPLAND RUNOFF

DIVERSIONARY MEASURES SHALL BE USED TO INTERCEPT RUNOFF FROM ABOVE THE CONSTRUCTION AND DIRECT IT AROUND THE DISTURBED AREA SO THAT CLEAN WATER DOES NOT BECOME MUDDIED WHILE TRAVELING OVER EXPOSED SOILS ON THE CONSTRUCTION SITE.

THE PROJECT AREA IS RELATIVELY FLAT. THEREFORE IT IS NOT ANTICIPATED THAT DIVERSION MEASURES WILL BE NECESSARY.

1.4.6 SLOW DOWN CHANNELIZED RUNOFF

CHECK STRUCTURES SHALL BE UTILIZED TO REDUCE THE VELOCITY, AND THUS THE EROSIVE POTENTIAL, OF CONCENTRATED FLOW IN CHANNELS.

STONE CHECK DAMS WILL BE INSTALLED AS PROPOSED ON THE EPSC PLAN, AT A MINIMUM.

1.4.7 CONSTRUCT PERMANENT CONTROLS

PERMANENT STORMWATER TREATMENT DEVICES SHALL BE INSTALLED AS SHOWN ON THE PLANS AND IN ACCORDANCE WITH PERMIT CONDITIONS. CULVERTS, DROP INLETS, STONE LINED DITCHES AND GRASS SWALES SHALL BE INSTALLED AS SHOWN ON THE DRAINAGE LAYOUT SHEET.

1.4.8 STABILIZE EXPOSED SOILS DURING CONSTRUCTION

ALL AREAS OF DISTURBANCE MUST HAVE TEMPORARY STABILIZATION IN PLACE WITHIN 48 HOURS OF DISTURBANCE OR IN ACCORDANCE WITH THE CONSTRUCTION GENERAL PERMIT 3-9020 AUTHORIZATION.

SURFACE ROUGHENING OF ALL EXPOSED SLOPES, COMBINED WITH TEMPORARY MULCHING, SHALL BE UTILIZED ON A REGULAR BASIS. BIODEGRADABLE EROSION CONTROL MATTING OR AN EQUIVALENT SHALL BE USED TO STABILIZE ALL SLOPES STEEPER THAN 1:3.

THE FORECAST OF RAINFALL EVENTS SHALL TRIGGER IMMEDIATE PROTECTION OF EXPOSED SOILS.

1.4.9 WINTER STABILIZATION

VARIOUS MEASURES SPECIFIC TO WINTER MAY BE NECESSARY SHOULD THE PROJECT EXTEND INTO WINTER (OCTOBER 15 THROUGH APRIL 15). REFER TO THE LOW RISK SITE HANDBOOK FOR GUIDANCE.

1.4.10 STABILIZE SOIL AT FINAL GRADE

EXPOSED SOIL MUST BE STABILIZED WITHIN 48 HOURS OF REACHING FINAL GRADE.

SEED, MULCH, FERTILIZER AND LIME SHALL BE USED TO ESTABLISH PERMANENT VEGETATION. FOR SLOPES STEEPER THAN 1:3, BIODEGRADABLE EROSION CONTROL MATTING OR AN EQUIVALENT SHALL BE USED INSTEAD OF MULCH.

1.4.11 DE-WATERING ACTIVITIES

DISCHARGE FROM DEWATERING ACTIVITIES THAT FLOWS OFF OF THE CONSTRUCTION SITE MUST NOT CAUSE OR CONTRIBUTE TO A VIOLATION OF THE VERMONT WATER QUALITY STANDARDS.

DEWATERING IS NOT ANTICIPATED ON THIS PROJECT SITE.

1.4.12 INSPECT YOUR SITE

INSPECT THE PROJECT SITE BASED ON SPECIAL PROVISION REQUIREMENTS OR CONSTRUCTION GENERAL PERMIT AUTHORIZATION STIPULATIONS.

1.5 SEQUENCE AND STAGING

THIS SECTION WILL BE DEVELOPED BY THE CONTRACTOR USING THE GUIDANCE OUTLINED IN THE VTRANS EPSC PLAN CONTRACTOR CHECKLIST.

1.5.1 CONSTRUCTION SEQUENCE

1.5.2 OFF-SITE ACTIVITIES

IN ADDITION TO THE CONTRACTOR CHECKLIST ANY ACTIVITIES OUTSIDE THE CONSTRUCTION LIMITS SHALL FOLLOW SPECIFICATION 105.25- 105.29 OF THE STANDARD SPECIFICATIONS FOR CONSTRUCTION.

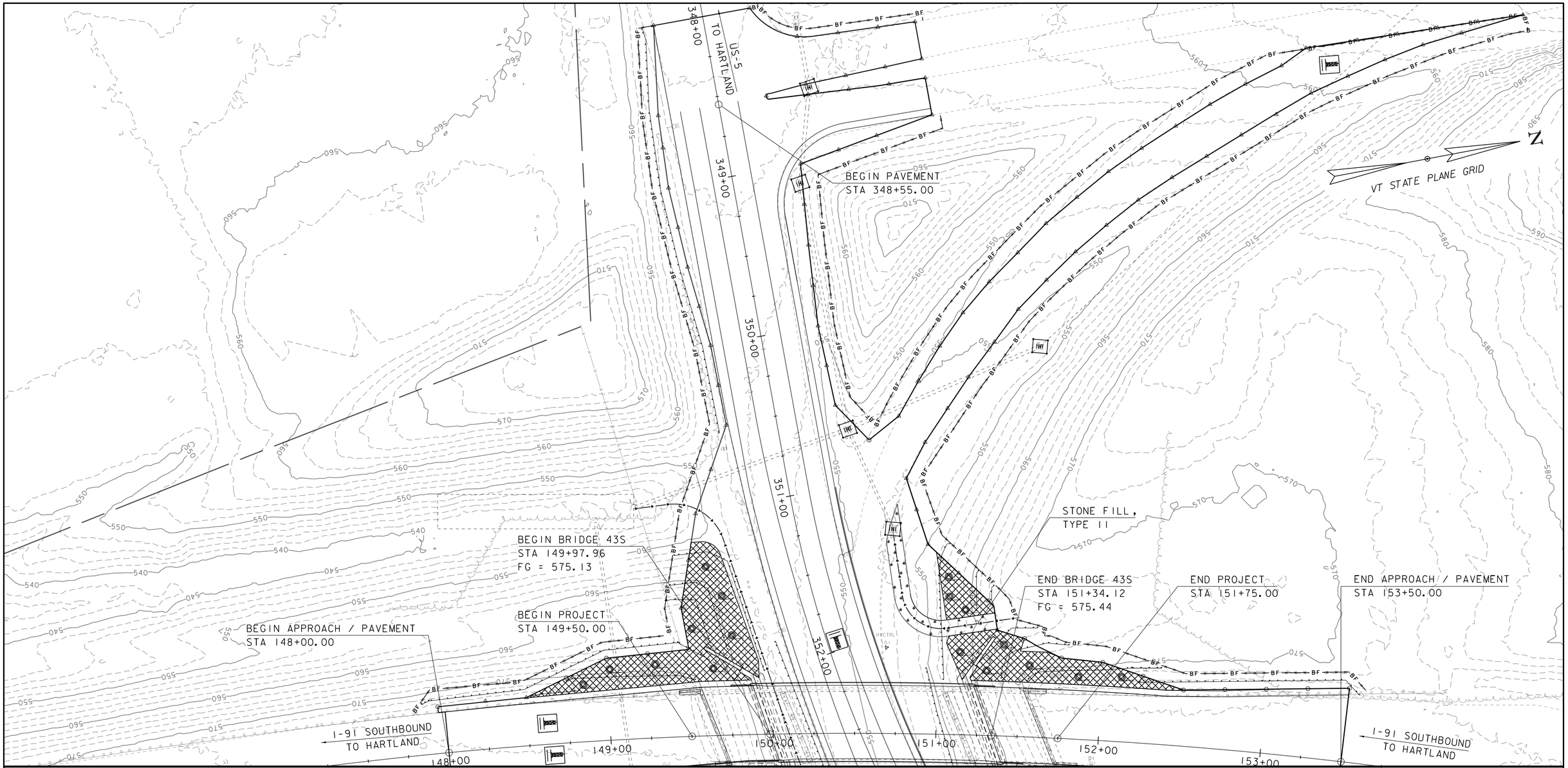

MATCHLINE STA 352+75.00

EPSC DURING CONSTRUCTION SHEET 1

SCALE 1" = 30'-0"
30 0 30

PROJECT NAME: HARTFORD	
PROJECT NUMBER: IM 091-2(79)	
FILE NAME: s12a132bdr_ero_dur.dgn	PLOT DATE: 15-DEC-2014
PROJECT LEADER: K. HIGGINS	DRAWN BY: K. FRIEDLAND
DESIGNED BY: W. LAMMER	CHECKED BY: J. SALVATORI
EPSC DURING CONSTRUCTION SHEET 1	SHEET 133 OF 166

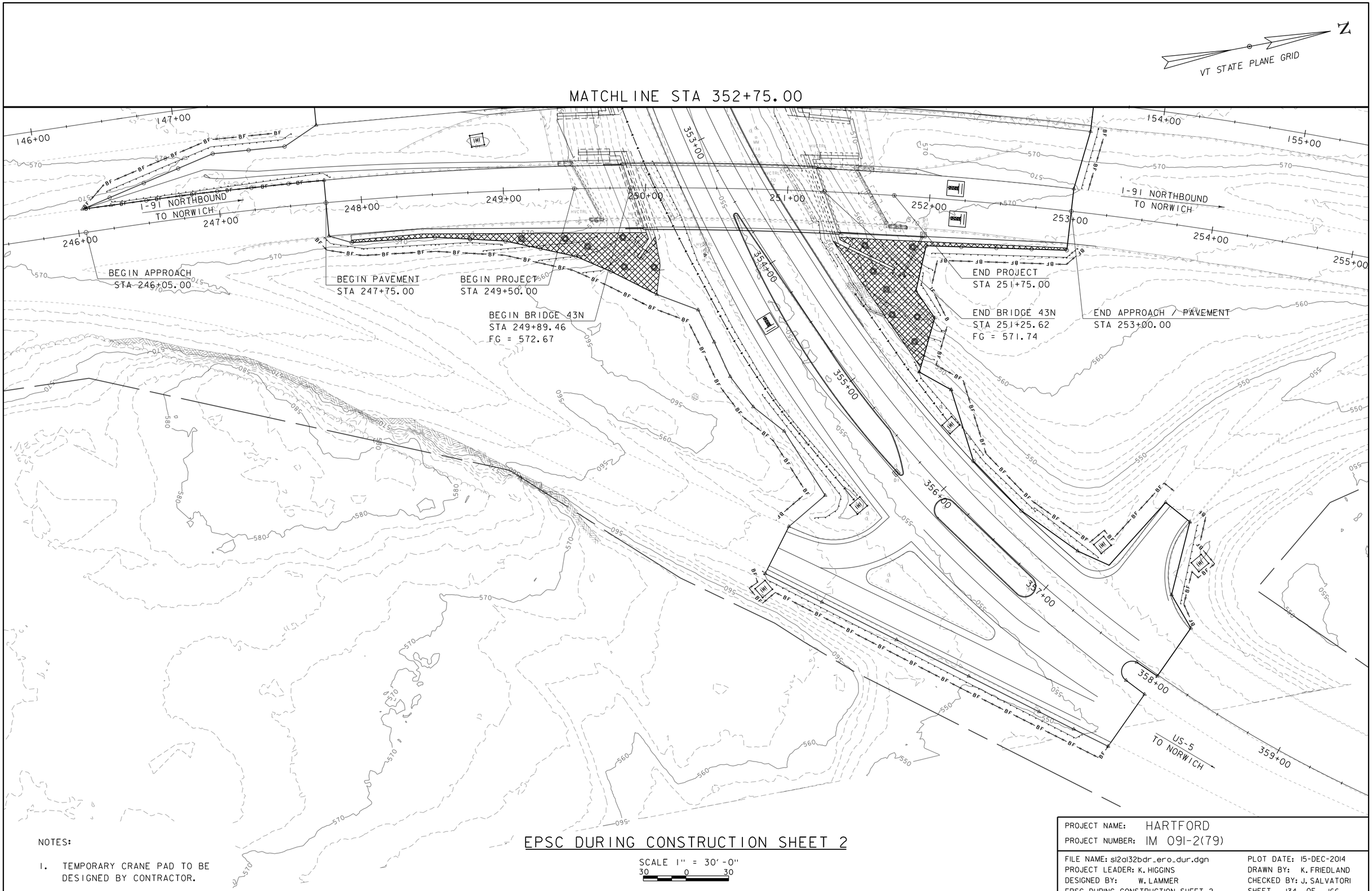

NOTES:

1. TEMPORARY CRANE PAD TO BE DESIGNED BY CONTRACTOR.

EPSC DURING CONSTRUCTION SHEET 2

SCALE 1" = 30'-0"
30 0 30

PROJECT NAME: HARTFORD	
PROJECT NUMBER: IM 091-2(79)	
FILE NAME: s12a132bdr_ero_dur.dgn	PLOT DATE: 15-DEC-2014
PROJECT LEADER: K. HIGGINS	DRAWN BY: K. FRIEDLAND
DESIGNED BY: W. LAMMER	CHECKED BY: J. SALVATORI
EPSC DURING CONSTRUCTION SHEET 2	SHEET 134 OF 166

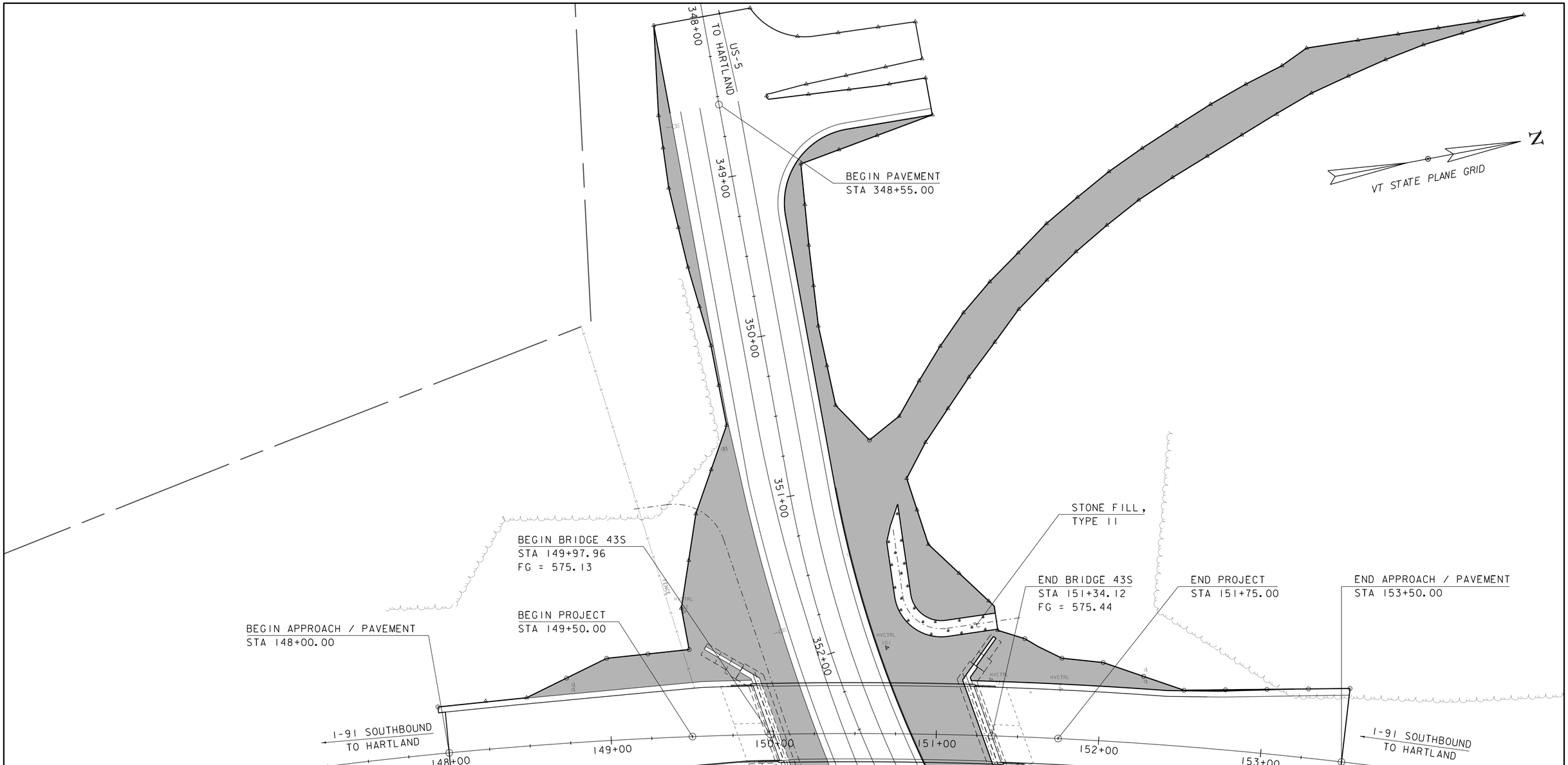

MATCHLINE STA 352+75.00

AREAS OF EARTH DISTURBANCE
THAT WILL REQUIRE REVEGETATION.

EPSC FINAL CONDITIONS SHEET 1

SCALE 1" = 30'-0"
30 0 30

PROJECT NAME: HARTFORD	
PROJECT NUMBER: IM 091-2(79)	
FILE NAME: s12a132bdr_ero_final.dgn	PLOT DATE: 15-DEC-2014
PROJECT LEADER: K. HIGGINS	DRAWN BY: K. FRIEDLAND
DESIGNED BY: W. LAMMER	CHECKED BY: J. SALVATORI
EPSC FINAL CONDITIONS SHEET 1	SHEET 135 OF 166

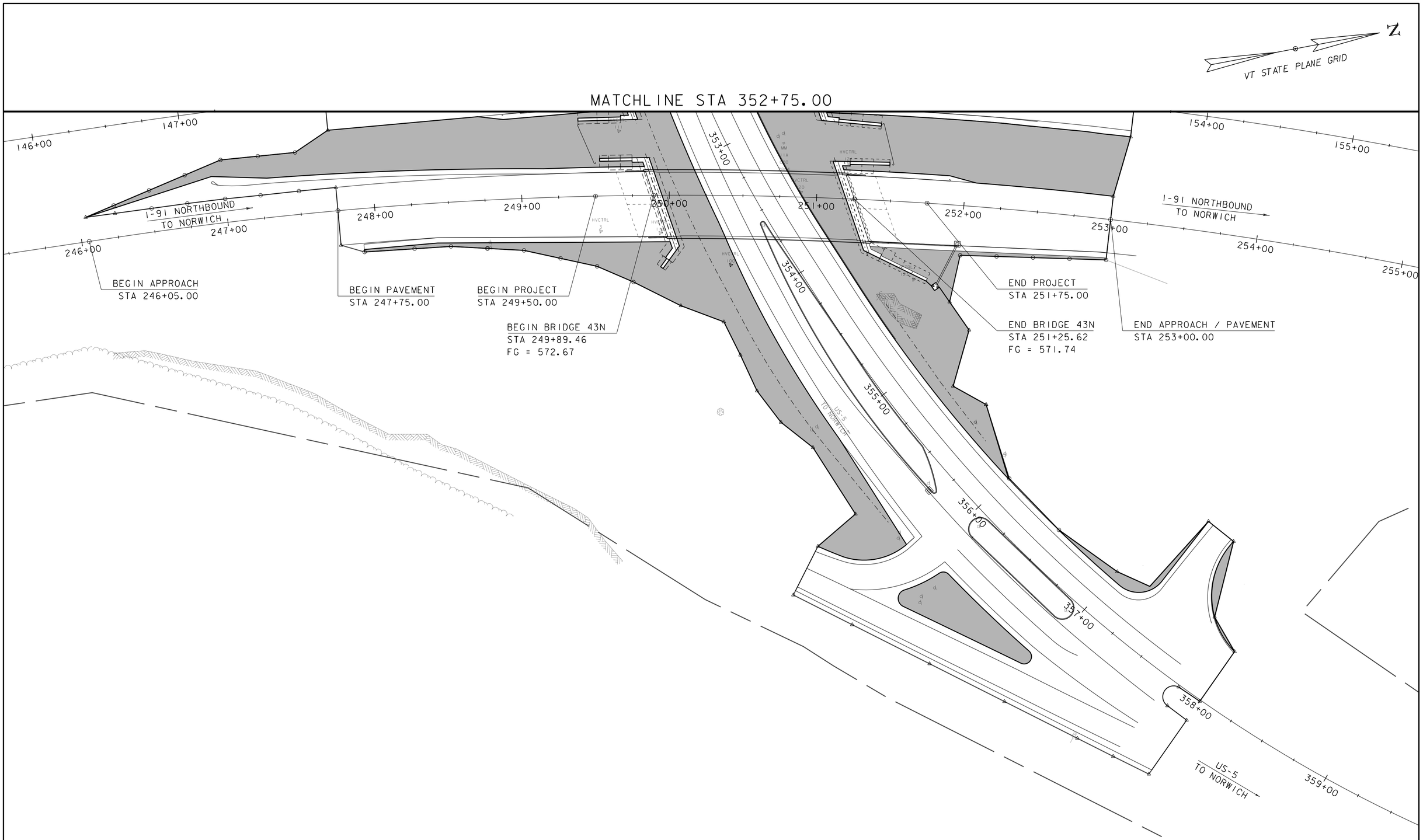

AREAS OF EARTH DISTURBANCE THAT WILL REQUIRE REVEGETATION.

EPSC FINAL CONDITIONS SHEET 2

SCALE 1" = 30'-0"
30 0 30

PROJECT NAME: HARTFORD	
PROJECT NUMBER: IM 091-2(79)	
FILE NAME: s12a132bdr_ero_final.dgn	PLOT DATE: 15-DEC-2014
PROJECT LEADER: K. HIGGINS	DRAWN BY: K. FRIEDLAND
DESIGNED BY: W. LAMMER	CHECKED BY: J. SALVATORI
EPSC FINAL CONDITIONS SHEET 2	SHEET 136 OF 166

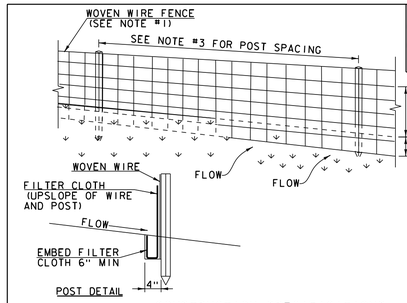

SYMBOL

SILT FENCE

SILT FENCE WOVEN WIRE

NOT TO SCALE

CONSTRUCTION SPECIFICATIONS

1. WOVEN WIRE REINFORCED FENCE IS REQUIRED WITHIN 100' UPSLOPE OF RECEIVING WATERS WHEN THE PROJECT FALLS UNDER A CONSTRUCTION STORMWATER PERMIT. WOVEN WIRE SHALL BE A MIN. 14 GAUGE WITH A 6" MAX. MESH OPENING.
2. FILTER CLOTH SHALL BE EITHER FILTER X, MIRAFI100X, STABILINKA T140N OR APPROVED EQUIVALENT.
3. POST SPACING FOR WIRE-BACKED FENCE SHALL BE 10' MAXIMUM. FOR FILTER-CLOTH FENCE, WHEN ELONGATION IS >50%, POST SPACING SHALL NOT EXCEED 4' AND WHEN ELONGATION IS <50%, POST SPACING SHALL NOT EXCEED 6'.
4. WOVEN WIRE FENCE IS TO BE FASTENED SECURELY TO FENCE POSTS WITH WIRE TIES. FILTER CLOTH IS TO BE FASTENED SECURELY TO WOVEN WIRE FENCE WITH TIES SPACED EVERY 24" AT TOP AND MID SECTION.
5. WHEN TWO SECTIONS OF FILTER CLOTH ADJOIN EACH OTHER THEY SHALL BE OVER-LAPPED BY 6" AND FOLDED.
6. MAINTENANCE SHALL BE PERFORMED AS NEEDED AND MATERIAL REMOVED WHEN SEDIMENT REACHES HALF OF FABRIC HEIGHT.

ADAPTED FROM DETAILS PROVIDED BY: NEW YORK STATE DEC
ORIGINALLY DEVELOPED BY USDA-NRCS
VERMONT DEPARTMENT OF ENVIRONMENTAL CONSERVATION

SILT FENCE

NOTES:
REFER TO "THE VERMONT STANDARDS & SPECIFICATIONS FOR EROSION PREVENTION & SEDIMENT CONTROL -2006- " FROM THE VT AGENCY OF NATURAL RESOURCES FOR ADDITIONAL GUIDANCE.

THIS WORK SHALL BE PERFORMED IN ACCORDANCE WITH SECTION 649 AND AS SHOWN IN THE PLANS FOR GEOTEXTILE FOR SILT FENCE (PAY ITEM 649.51) OR GEOTEXTILE FOR SILT FENCE, WOVEN WIRE REINFORCED (PAY ITEM 649.515).

REVISIONS	
MARCH 21, 2008	WHF
DECEMBER 11, 2008	WHF
JANUARY 13, 2009	WHF

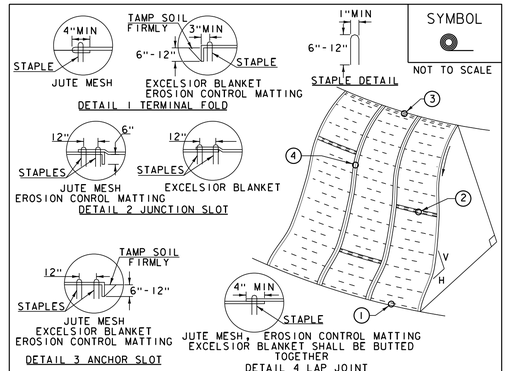

SYMBOL

NOT TO SCALE

CONSTRUCTION SPECIFICATIONS

1. APPLY TO SLOPES GREATER THAN 3H:1V OR WHERE NECESSARY TO AID IN ESTABLISHING VEGETATION.
2. APPLY FERTILIZER, LIME SEED PRIOR TO PLACING MATTING.
3. STAPLES ARE TO BE PLACED ALTERNATELY, IN COLUMNS APPROXIMATELY 2' APART AND IN ROWS APPROXIMATELY 3' APART. APPROXIMATELY 175 STAPLES ARE REQUIRED PER 4'X225' ROLL OF MATERIAL AND 125 STAPLES ARE REQUIRED PER 4'X150' ROLL OF MATERIAL.
4. DISTURBED AREAS SHALL BE SMOOTHLY GRADED. EROSION CONTROL MATERIAL SHALL BE PLACED LOOSELY OVER GROUND SURFACE. DO NOT STRETCH.
5. ALL TERMINAL ENDS AND TRANSVERSE LAPS SHALL BE STAPLED AT APPROXIMATELY 12" INTERVALS.

ADAPTED FROM DETAILS PROVIDED BY: NEW YORK STATE DEC
ORIGINALLY DEVELOPED BY USDA-NRCS
VERMONT DEPARTMENT OF ENVIRONMENTAL CONSERVATION

ROLLED EROSION CONTROL PRODUCT (RECP) SIDE SLOPE

NOTES:
REFER TO "THE VERMONT STANDARDS & SPECIFICATIONS FOR EROSION PREVENTION & SEDIMENT CONTROL -2006- " FROM THE VT AGENCY OF NATURAL RESOURCES FOR ADDITIONAL GUIDANCE.
THIS WORK SHALL BE PERFORMED IN ACCORDANCE WITH SECTION 653 AND AS SHOWN IN THE PLANS FOR TEMPORARY EROSION MATTING (PAY ITEM 653.20) ~~OR PERMANENT EROSION MATTING (PAY ITEM 653.21).~~

REVISIONS	
APRIL 16, 2007	JMF
JANUARY 13, 2009	WHF

VAOT RURAL AREA MIX

% WEIGHT	LBS/AC BROADCAST	LBS/AC HYDROSEED	NAME	GERM %	PURITY %
37.5%	22.5	45	CREEPING RED FESCUE	85%	98%
37.5%	22.5	45	TALL FESCUE	90%	95%
5.0%	3	6	RED TOP	90%	95%
15.0%	9	18	BIRDSFOOT TREFOIL	85%	98%
5.0%	3	6	ANNUAL RYE GRASS	85%	95%
100%	60	120			

VAOT URBAN AREA MIX

% WEIGHT	LBS/AC BROADCAST	LBS/AC HYDROSEED	NAME	GERM %	PURITY %
42.5%	34	68	CREEPING RED FESCUE	85%	98%
10.0%	8	16	PERENNIAL RYE GRASS	90%	95%
42.5%	34	68	KENTUCKY BLUE GRASS	85%	85%
5.0%	4	8	ANNUAL RYE GRASS	85%	95%
100%	80	160			

SOIL AMENDMENT GUIDANCE

FERTILIZER BROADCAST	FERTILIZER HYDROSEED	LIME BROADCAST	LIME HYDROSEED
10-20-10	*FOLLOW*	PELLETIZED	*FOLLOW*
500 LBS/AC	*MANUFACTURER*	2 TONS/AC	*MANUFACTURER*

CONSTRUCTION GUIDANCE

1. RURAL SEED MIX: USE AS INDICATED IN THE PLANS AND/OR FOR ALL ESTABLISHED UPLAND (NON WETLAND) AREAS DISTURBED BY THE CONTRACTOR.
2. URBAN SEED MIX: USE AS INDICATED IN THE PLANS AND/OR FOR ALL ESTABLISHED LAWN AREAS DISTURBED BY THE CONTRACTOR.
3. ALL SEED MIXTURES: SHALL NOT HAVE A WEED CONTENT EXCEEDING 0.40% BY WEIGHT AND SHALL BE FREE OF ALL NOXIOUS SEED.
4. FERTILIZER AND LIMESTONE: SHALL FOLLOW RATES SHOWN ON PLAN OR AS DIRECTED BY THE ENGINEER
5. HAY MULCH: TO BE PLACED ON EARTH SLOPES AT THE RATE OF 2 TONS/ACRE, ACHIEVE 90% GROUND COVER OR AS DIRECTED BY THE ENGINEER.
6. TOPSOIL: TO BE USED WITH SEED AS INDICATED ON THE PLANS, OR AS DIRECTED BY THE ENGINEER.
7. HYDROSEEDING: ALTHOUGH GUIDANCE IS GIVEN ABOVE THE SITE CONDITIONS AND THE TYPE OF HYDROSEED WILL ULTIMATELY DICTATE THE AMOUNTS AND TYPES OF SOIL AMENDMENTS TO BE APPLIED
8. TURF ESTABLISHMENT: PLACING SEED, FERTILIZER, LIME AND MULCH PRIOR TO SEPTEMBER 15 AND AFTER APRIL 15 CAN BETTER ENSURE A VIGOROUS GROWTH OF GRASS.

ADAPTED FROM VTRANS TECHNICAL LANDSCAPE MANUAL FOR ROADWAYS AND TRANSPORTATION FACILITIES

TURF ESTABLISHMENT

THIS WORK SHALL BE PERFORMED IN ACCORDANCE WITH SECTION 651 FOR SEED (PAY ITEM 651.15)

REVISIONS	
JUNE 23, 2009	WHF
JANUARY 15, 2010	WHF
FEBRUARY 16, 2011	WHF

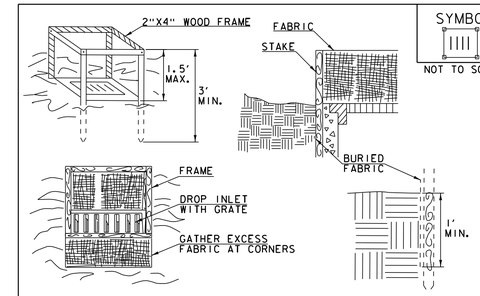

SYMBOL

NOT TO SCALE

CONSTRUCTION SPECIFICATIONS

1. FILTER FABRIC SHALL HAVE AN APPARENT OPENING SIZE OF 40-85. BURLAP MAY BE USED FOR SHORT TERM APPLICATIONS.
2. CUT FABRIC FROM A CONTINUOUS ROLL TO ELIMINATE JOINTS. IF JOINTS ARE NEEDED THEY WILL BE OVERLAPPED TO THE NEXT STAKE.
3. STAKE MATERIALS WILL BE STANDARD 2"x 4" WOOD OR EQUIVALENT METAL WITH A MINIMUM LENGTH OF 3'.
4. SPACE STAKES EVENLY AROUND INLET 3' APART AND DRIVE A MINIMUM 18" DEEP. SPANS GREATER THAN 3' MAY BE BRIDGED WITH THE USE OF WIRE MESH BEHIND THE FILTER FABRIC FOR SUPPORT.
5. FABRIC SHALL BE EMBEDDED 1' MINIMUM BELOW GROUND AND BACKFILLED. IT SHALL BE SECURELY FASTENED TO THE STAKES AND FRAME.
6. A 2" x 4" WOOD FRAME SHALL BE COMPLETED AROUND THE CREST OF THE FABRIC FOR OVER FLOW STABILITY.
7. MAXIMUM DRAINAGE AREA 1 ACRE

ADAPTED FROM DETAILS PROVIDED BY: NEW YORK STATE DEC
ORIGINALLY DEVELOPED BY USDA-NRCS
VERMONT DEPARTMENT OF ENVIRONMENTAL CONSERVATION

FILTER FABRIC DROP INLET PROTECTION

NOTES:
REFER TO "THE VERMONT STANDARDS & SPECIFICATIONS FOR EROSION PREVENTION & SEDIMENT CONTROL -2006- " FROM THE VT AGENCY OF NATURAL RESOURCES FOR ADDITIONAL GUIDANCE.

THIS WORK SHALL BE PERFORMED IN ACCORDANCE WITH SECTION 653 FOR INLET PROTECTION DEVICE, TYPE I (PAY ITEM 653.40).

REVISIONS	
MARCH 7, 2008	WHF
JANUARY 13, 2009	WHF

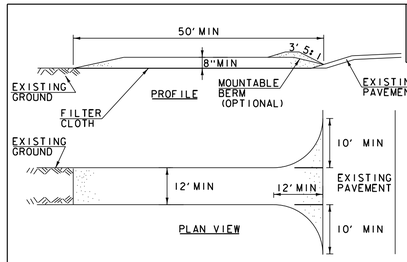

SYMBOL

NOT TO SCALE

CONSTRUCTION SPECIFICATIONS

1. STONE SIZE- USE 1-4" STONE, RECLAIMED OR RECYCLED CONCRETE EQUIVALENT.
2. LENGTH- NOT LESS THAN 50' (EXCEPT ON A SINGLE RESIDENCE LOT WHERE A 30' MINIMUM LENGTH APPLIES).
3. THICKNESS- NOT LESS THAN 8".
4. WIDTH- 12' MINIMUM, BUT NOT LESS THAN THE FULL WIDTH AT POINTS WHERE INGRESS OR EGRESS OCCURS. 24' IF SINGLE ENTRANCE TO SITE.
5. GEOTEXTILE MUST BE PLACED OVER THE ENTIRE AREA PRIOR TO PLACING STONE.
6. SURFACE WATER- ALL SURFACE WATER FLOWING OR DIVERTED TOWARD CONSTRUCTION ENTRANCES SHALL BE PIPED BENEATH THE ENTRANCE. IF PIPING IS IMPRACTICAL, A MOUNTABLE BERM WITH 5:1 SLOPES WILL BE PERMITTED.
7. MAINTENANCE- THE ENTRANCE SHALL BE MAINTAINED IN A CONDITION WHICH WILL PREVENT TRACKING OR FLOWING OF SEDIMENT TO PUBLIC RIGHTS-OF-WAY, ALL SEDIMENT SPILLED, DROPPED, WASHED OR TRACKED ONTO PUBLIC RIGHTS-OF-WAY MUST BE REMOVED IMMEDIATELY.
8. WHEN WASHING IS REQUIRED, IT SHALL BE DONE ON AN AREA STABILIZED WITH STONE AND WHICH DRAINS INTO AN APPROVED SEDIMENT TRAPPING DEVICE.
9. PERIODIC INSPECTION AND NEEDED MAINTENANCE SHALL BE PROVIDED ACCORDING TO PERMIT REQUIREMENTS.

ADAPTED FROM DETAILS PROVIDED BY: NEW YORK STATE DEC
ORIGINALLY DEVELOPED BY USDA-NRCS
VERMONT DEPARTMENT OF ENVIRONMENTAL CONSERVATION

STABILIZED CONSTRUCTION ENTRANCE

NOTES:
REFER TO "THE VERMONT STANDARDS & SPECIFICATIONS FOR EROSION PREVENTION & SEDIMENT CONTROL -2006- " FROM THE VT AGENCY OF NATURAL RESOURCES FOR ADDITIONAL GUIDANCE.

THIS WORK SHALL BE PERFORMED IN ACCORDANCE WITH SECTION 653 FOR VEHICLE TRACKING PAD (PAY ITEM 653.35) OR AS SPECIFIED IN THE CONTRACT.

REVISIONS	
MARCH 24, 2008	WHF
JANUARY 13, 2009	WHF

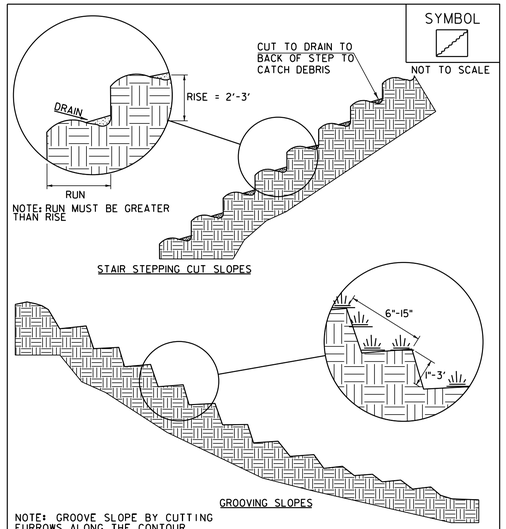

SYMBOL

NOT TO SCALE

NOTE: GROOVE SLOPE BY CUTTING FURROWS ALONG THE CONTOUR. IRREGULARITIES IN THE SOIL SURFACE CATCH RAINWATER AND RETAIN LIME, FERTILIZER AND SEED.

ADAPTED FROM DETAILS PROVIDED BY: NEW YORK STATE DEC
ORIGINALLY DEVELOPED BY USDA-NRCS
VERMONT DEPARTMENT OF ENVIRONMENTAL CONSERVATION

SURFACE ROUGHENING

NOTES:
REFER TO "THE VERMONT STANDARDS & SPECIFICATIONS FOR EROSION PREVENTION & SEDIMENT CONTROL -2006- " FROM THE VT AGENCY OF NATURAL RESOURCES FOR ADDITIONAL GUIDANCE.

THIS WORK SHALL BE CONSIDERED INCIDENTAL TO THE CONTRACT

REVISIONS	
APRIL 1, 2008	WHF
JANUARY 13, 2009	WHF

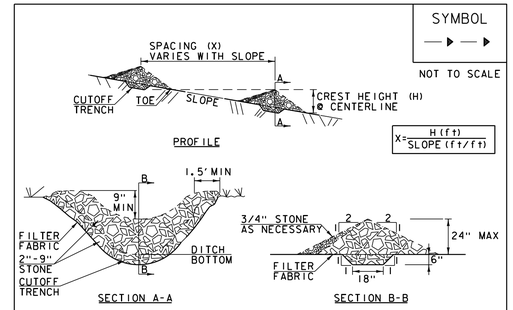

SYMBOL

NOT TO SCALE

CONSTRUCTION SPECIFICATIONS

1. STONE WILL BE PLACED ON A FILTER FABRIC FOUNDATION.
2. CHECK DAMS SHALL BE SPACED SO THAT THE ELEVATION OF THE CREST OF THE DOWNSTREAM DAM IS AT THE SAME ELEVATION AS THE TOE OF THE UPSTREAM DAM.
3. 3/4" FILTERING STONE MAY BE ADDED TO THE FACE OF THE CHECK DAM AS NECESSARY.
4. EXTEND THE STONE A MINIMUM OF 1.5' BEYOND THE DITCH BANKS TO PREVENT CUTTING AROUND THE DAM.
5. PROTECT CHANNEL DOWNSTREAM OF THE LOWEST CHECK DAM FROM SCOUR AND EROSION WITH STONE OR LINER AS APPROPRIATE.
6. ENSURE THAT CHANNEL APPURTENANCES SUCH AS CULVERT ENTRANCES BELOW CHECK DAMS ARE NOT SUBJECT TO DAMAGE OR BLOCKAGE FROM DISPLACED STONE.
7. MAXIMUM DRAINAGE AREA 2 ACRES.

ADAPTED FROM DETAILS PROVIDED BY: NEW YORK STATE DEC
ORIGINALLY DEVELOPED BY USDA-NRCS
VERMONT DEPARTMENT OF ENVIRONMENTAL CONSERVATION

CHECK DAM

NOTES:
REFER TO "THE VERMONT STANDARDS & SPECIFICATIONS FOR EROSION PREVENTION & SEDIMENT CONTROL -2006- " FROM THE VT AGENCY OF NATURAL RESOURCES FOR ADDITIONAL GUIDANCE.

THIS WORK SHALL BE PERFORMED IN ACCORDANCE WITH SECTION 653 FOR TEMPORARY STONE CHECK DAM, TYPE I (PAY ITEM 653.25)

REVISIONS	
MARCH 21, 2008	WHF
JANUARY 8, 2009	WHF

PROJECT NAME: HARTFORD
PROJECT NUMBER: IM 091-2(79)

FILE NAME: s12a132ero_details.dgn
PROJECT LEADER: K. HIGGINS
DESIGNED BY: W. LAMMER
EPSC DETAILS

PLOT DATE: 15-DEC-2014
DRAWN BY: K. FRIEDLAND
CHECKED BY: J. SALVATORI
SHEET 137 OF 166

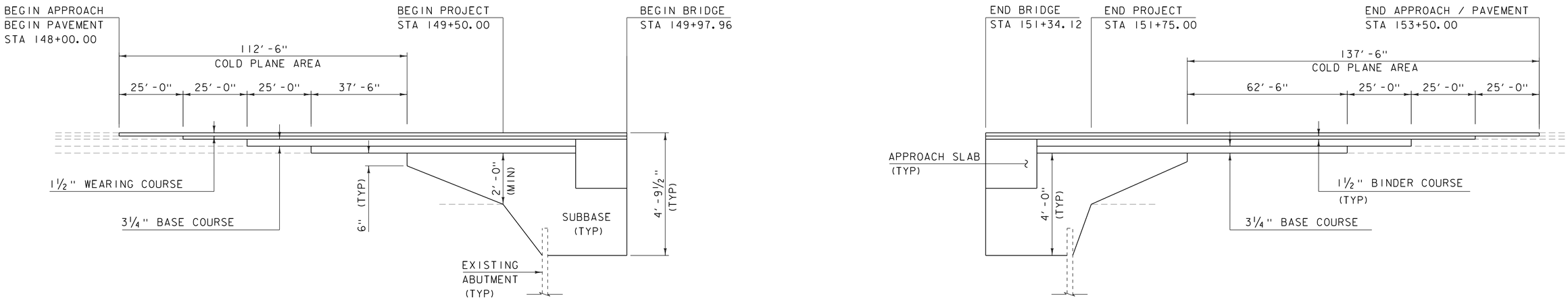

I-91 SB MATERIAL TRANSITION

HOR. SCALE 1" = 20'-0"
NO VERT. SCALE

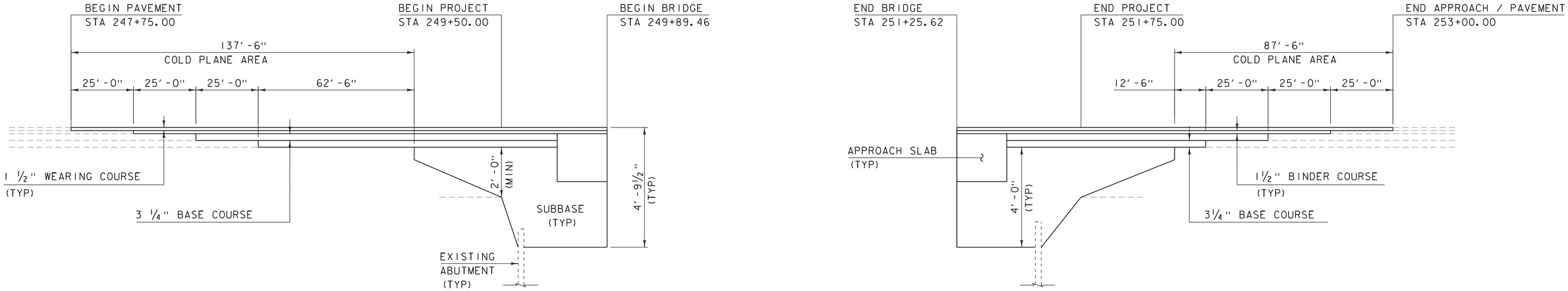

I-91 NB MATERIAL TRANSITION

HOR. SCALE 1" = 20'-0"
NO VERT. SCALE

PROJECT NAME: HARTFORD	
PROJECT NUMBER: IM 091-2(79)	
FILE NAME: s12a132profile.dgn	PLOT DATE: 15-DEC-2014
PROJECT LEADER: K. HIGGINS	DRAWN BY: J. SALVATORI
DESIGNED BY: J. SALVATORI	CHECKED BY: G. LAROCHE
MATERIAL TRANSITION	SHEET 138 OF 166

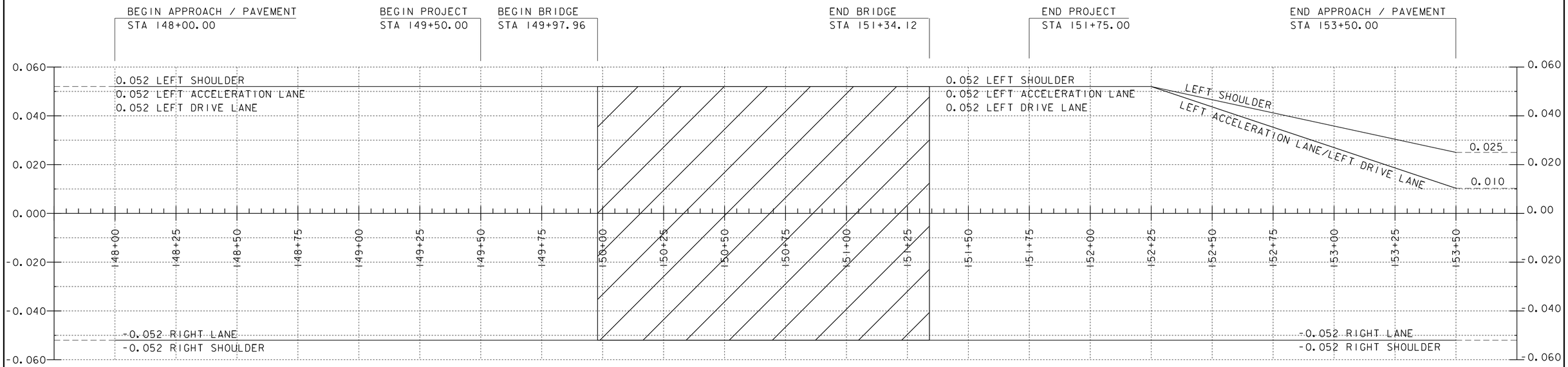

I-91 SB BANKING DIAGRAM

HOR. SCALE 1" = 20'-0"
NO VER. SCALE

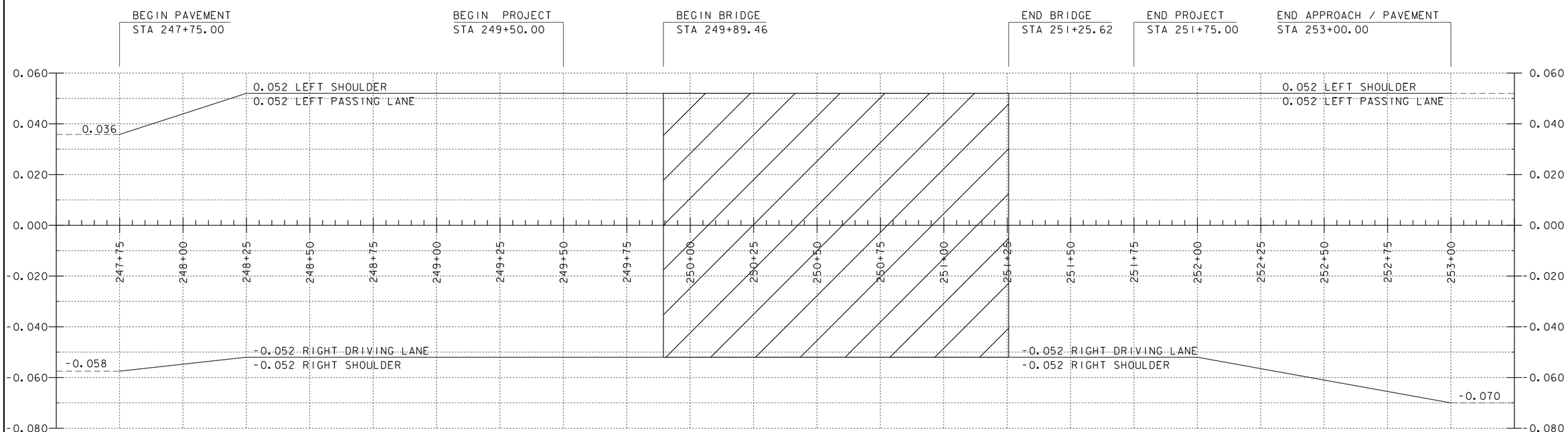

I-91 NB BANKING DIAGRAM

HOR. SCALE 1" = 20'-0"
NO VER. SCALE

PROJECT NAME: HARTFORD	
PROJECT NUMBER: IM 091-2(79)	
FILE NAME: s12a132profile.dgn	PLOT DATE: 15-DEC-2014
PROJECT LEADER: K. HIGGINS	DRAWN BY: J. SALVATORI
DESIGNED BY: G. LAROCHE	CHECKED BY: W. LAMMER
BANKING DIAGRAM	SHEET 139 OF 166

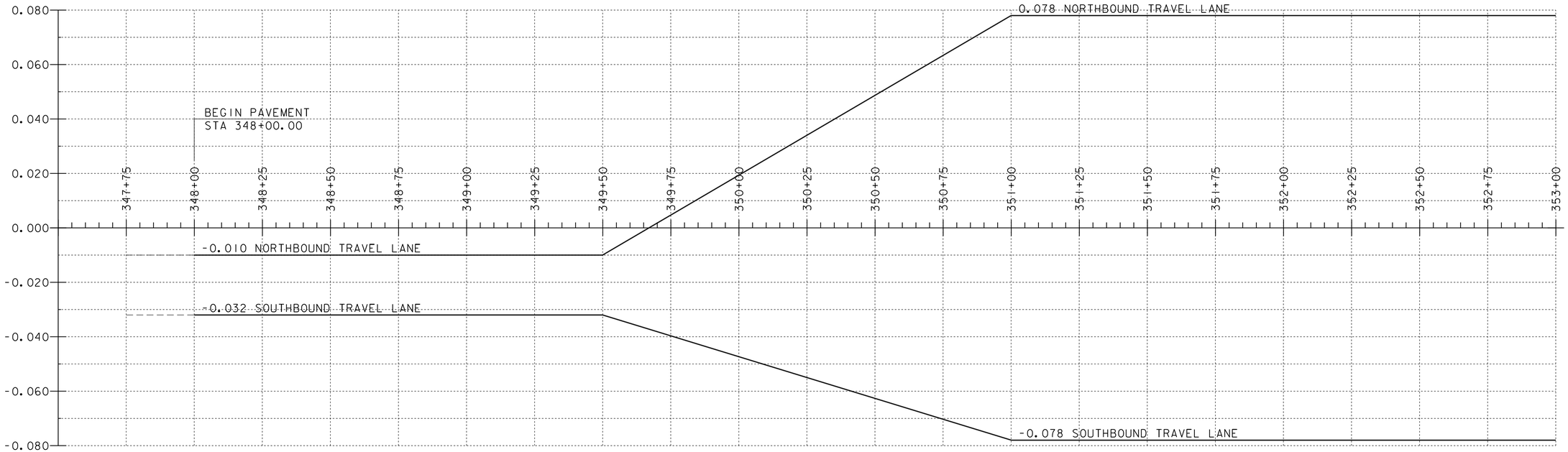

US 5 BANKING DIAGRAM
(STA 347+50 - 353+00)

HOR. SCALE 1" = 20'-0"
NO VER. SCALE

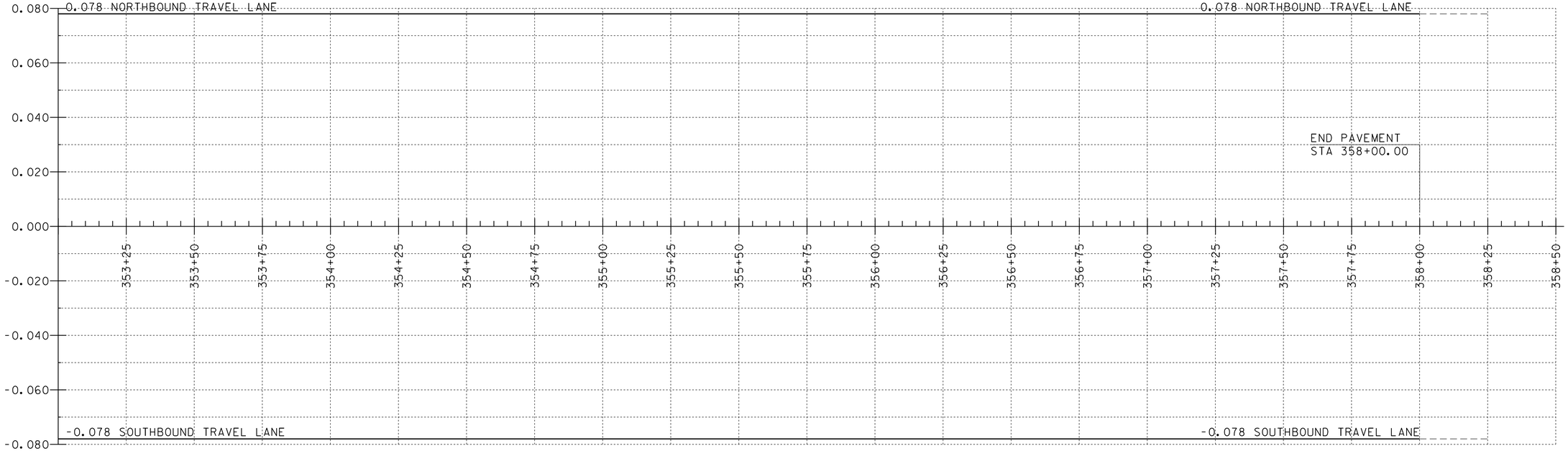

US 5 BANKING DIAGRAM
(STA 353+00 - 358+50)

HOR. SCALE 1" = 20'-0"
NO VER. SCALE

PROJECT NAME: HARTFORD	
PROJECT NUMBER: IM 091-2(79)	
FILE NAME: s12a132profile.dgn	PLOT DATE: 15-DEC-2014
PROJECT LEADER: K. HIGGINS	DRAWN BY: J. SALVATORI
DESIGNED BY: G. LAROCHE	CHECKED BY: W. LAMMER
US 5 BANKING DIAGRAM	SHEET 140 OF 166

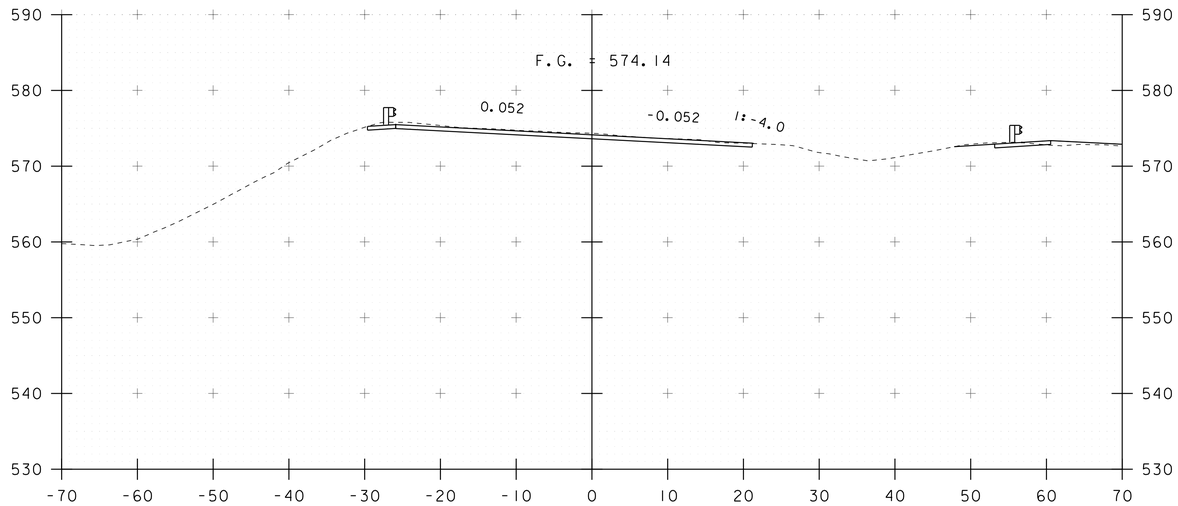

148+50

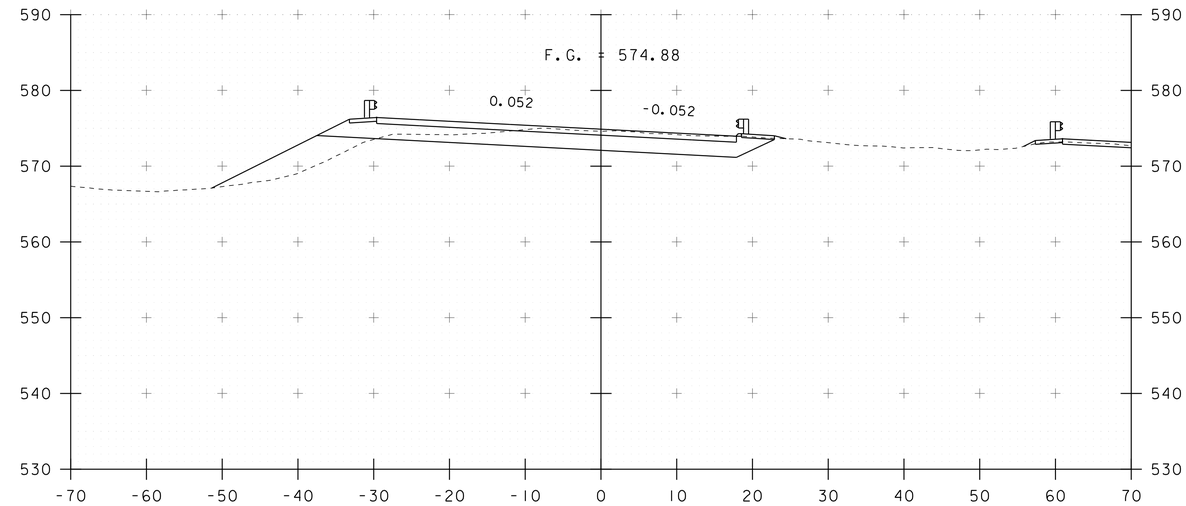

149+50
BEGIN PROJECT

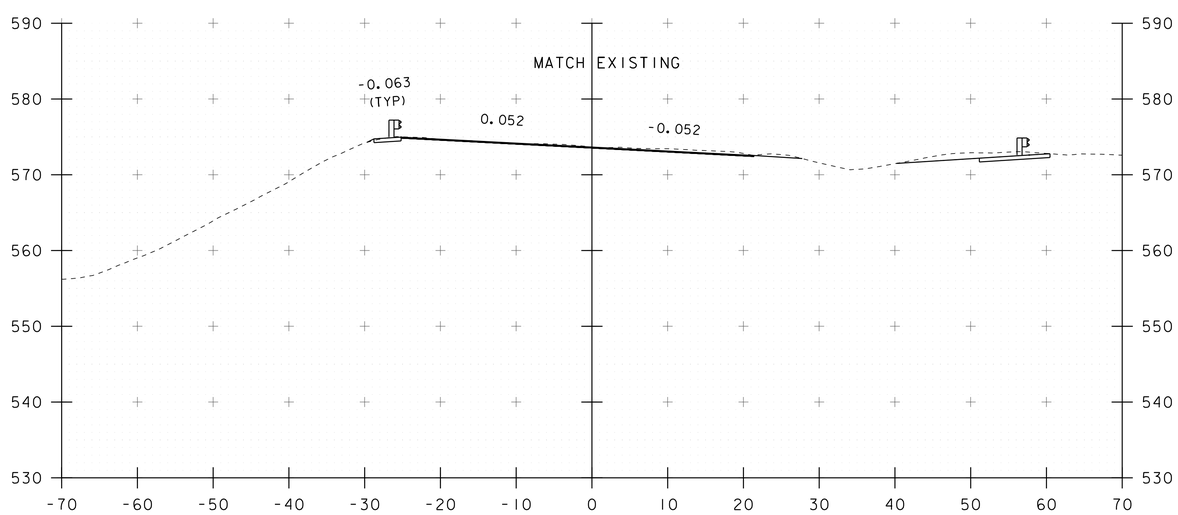

148+00
BEGIN APPROACH / PAVEMENT

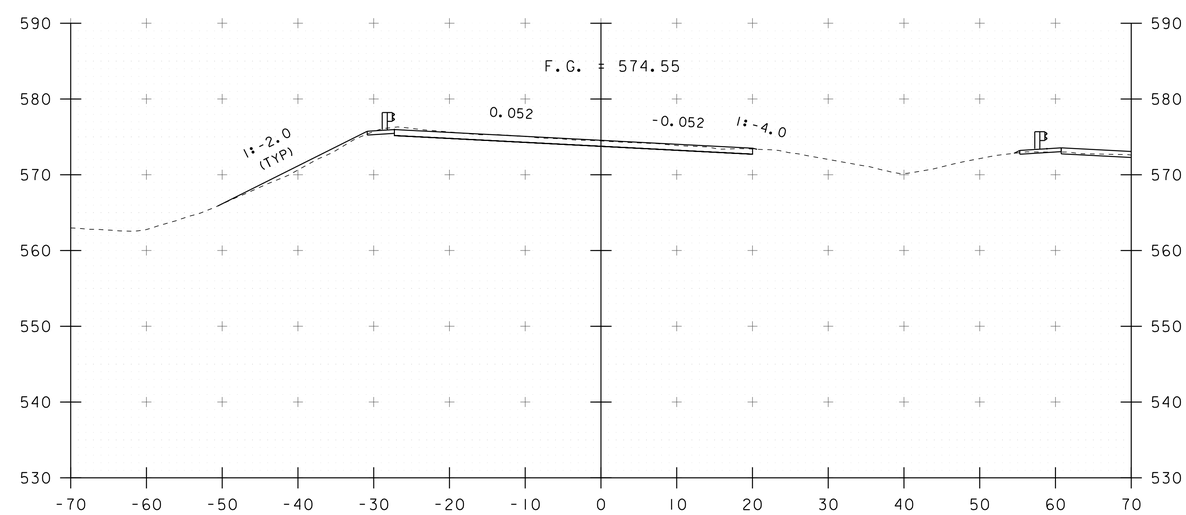

149+00

STA. 148+00 TO STA. 149+50

PROJECT NAME: HARTFORD	
PROJECT NUMBER: IM 091-2(79)	
FILE NAME: s12a132xsec.dgn	PLOT DATE: 15-DEC-2014
PROJECT LEADER: K. HIGGINS	DRAWN BY: K. FRIEDLAND
DESIGNED BY: G. LAROCHE	CHECKED BY: W. LAMMER
I-91 SOUTHBOUND CROSS SECTIONS	SHEET 141 OF 166

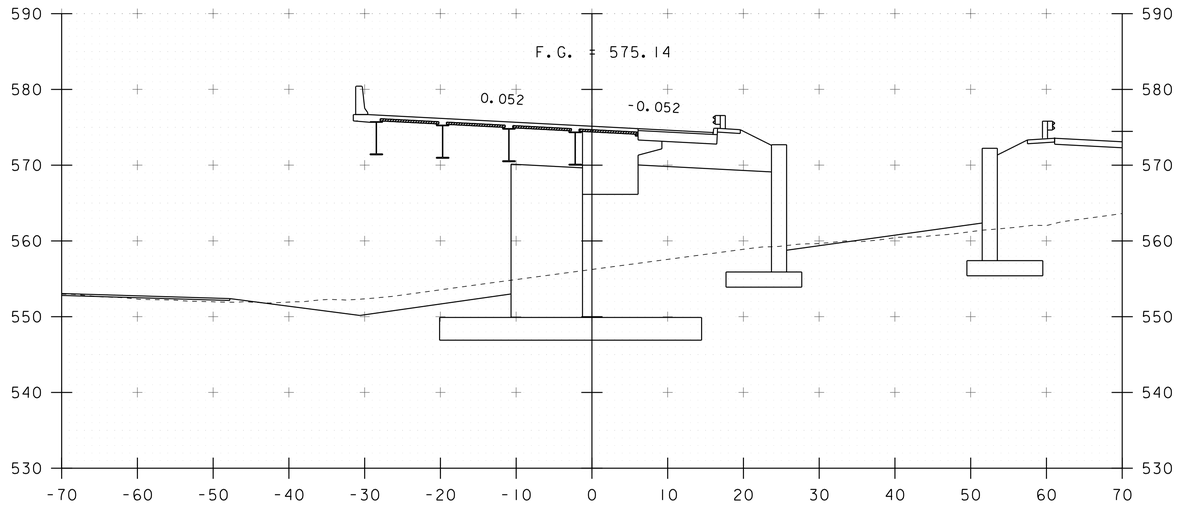

150+00
BEGIN BRIDGE 149+97.96

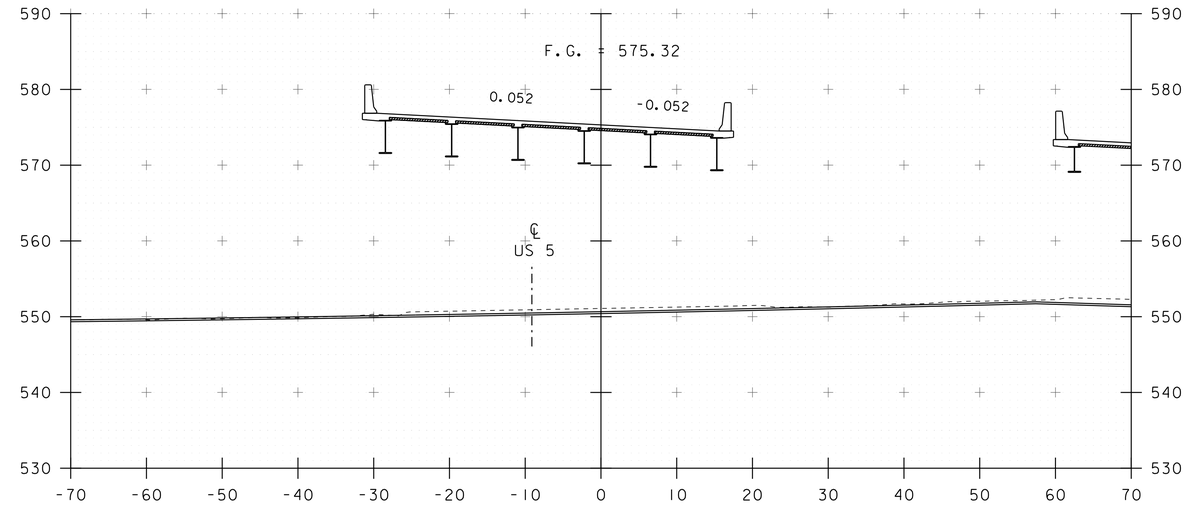

150+50

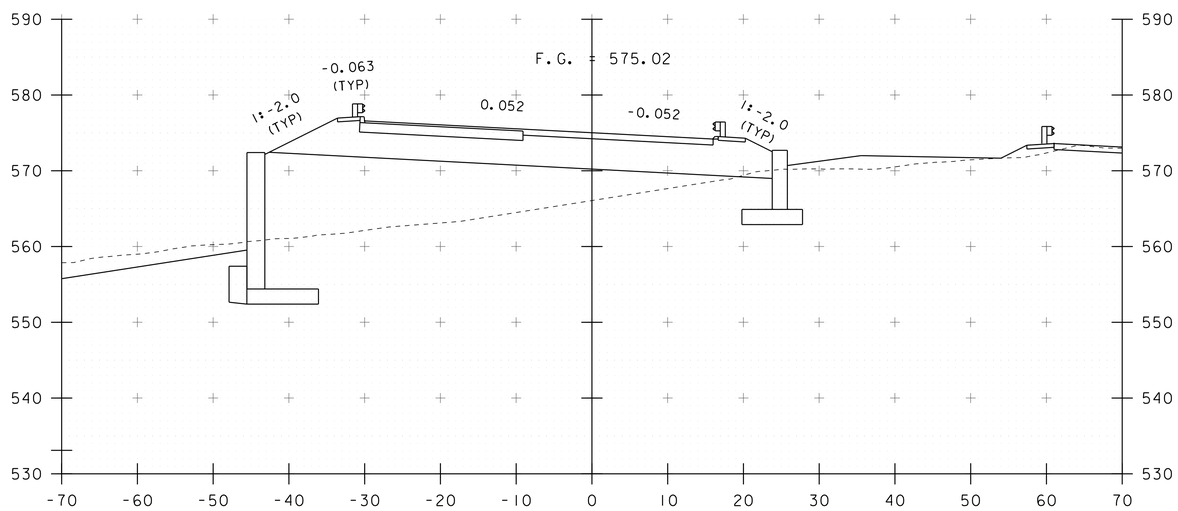

149+75

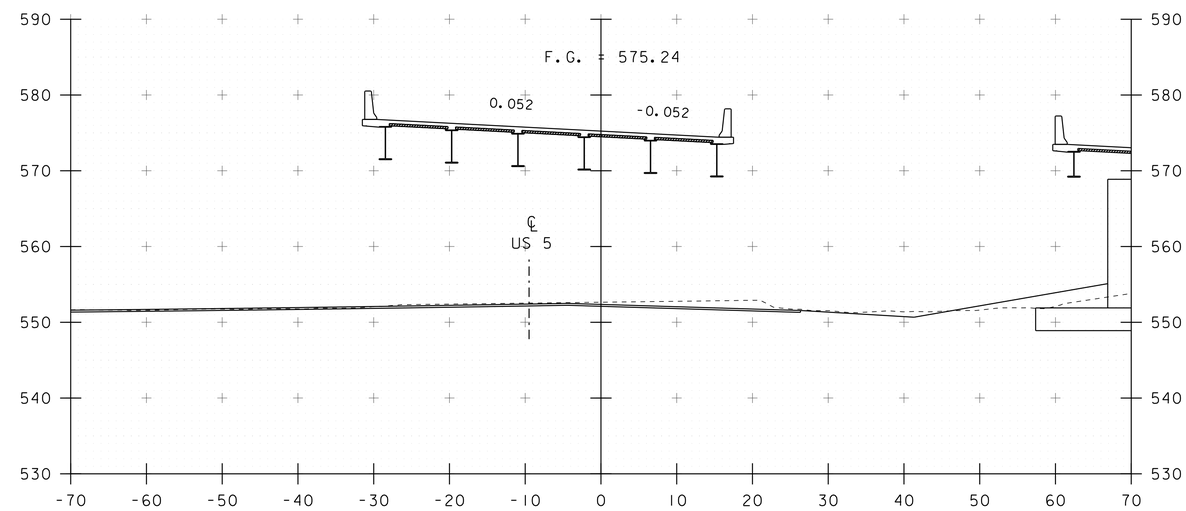

150+25

STA. 149+75 TO STA. 150+50

PROJECT NAME: HARTFORD	
PROJECT NUMBER: IM 091-2(79)	
FILE NAME: s12a132xsec.dgn	PLOT DATE: 15-DEC-2014
PROJECT LEADER: K. HIGGINS	DRAWN BY: K. FRIEDLAND
DESIGNED BY: G. LAROCHE	CHECKED BY: W. LAMMER
I-91 SOUTHBOUND CROSS SECTIONS	SHEET 142 OF 166

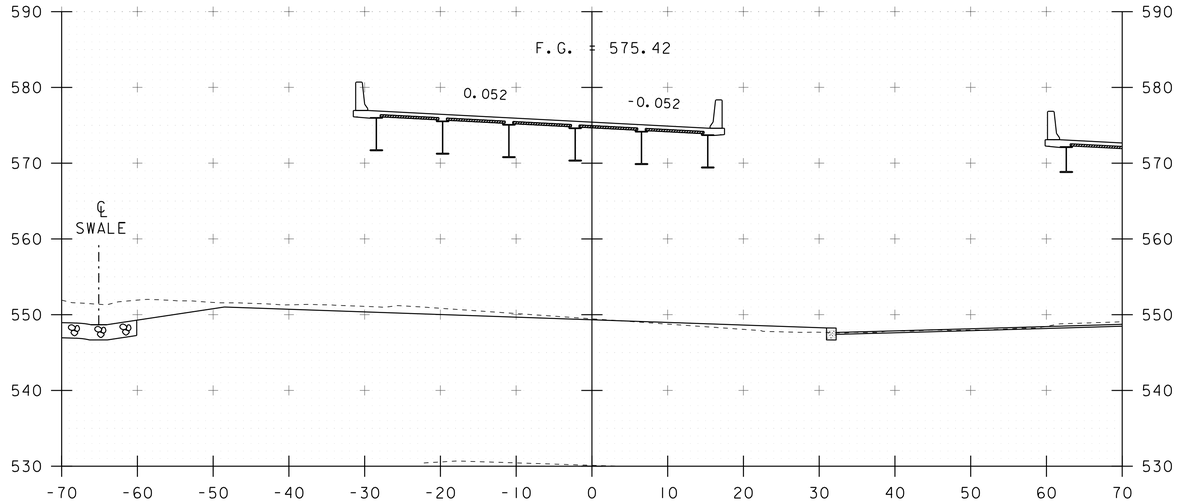

151+00

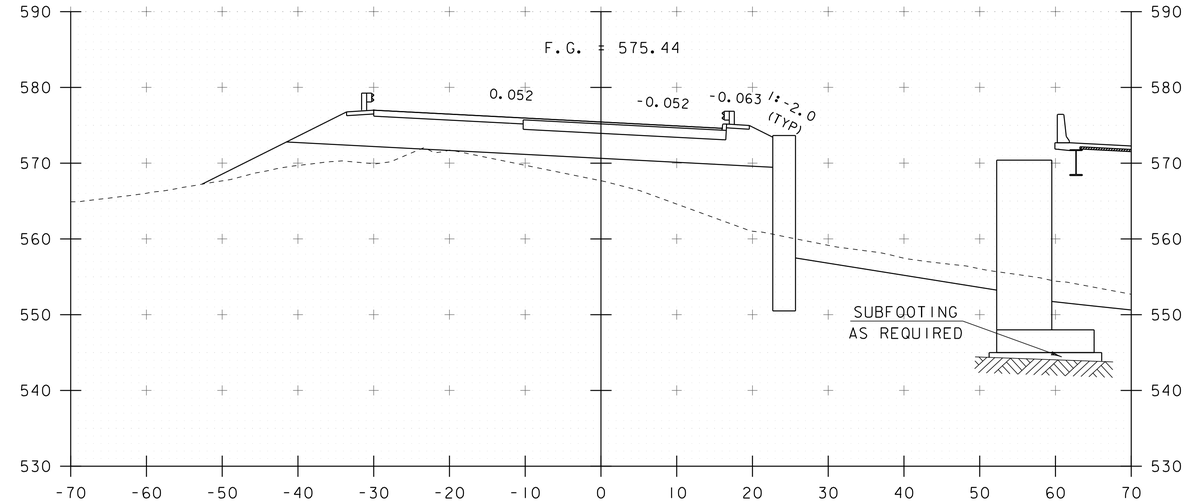

151+50

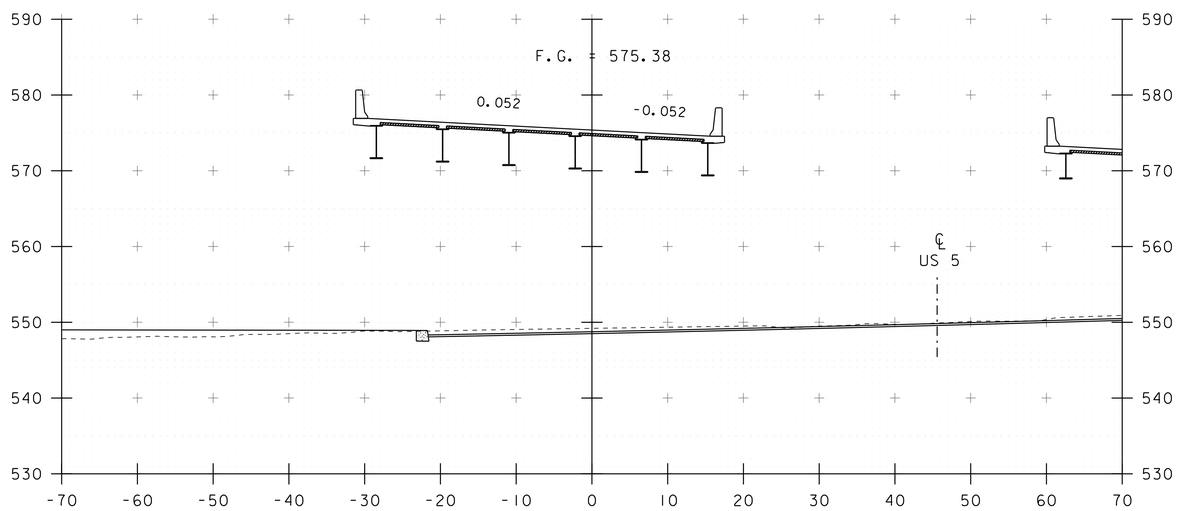

150+75

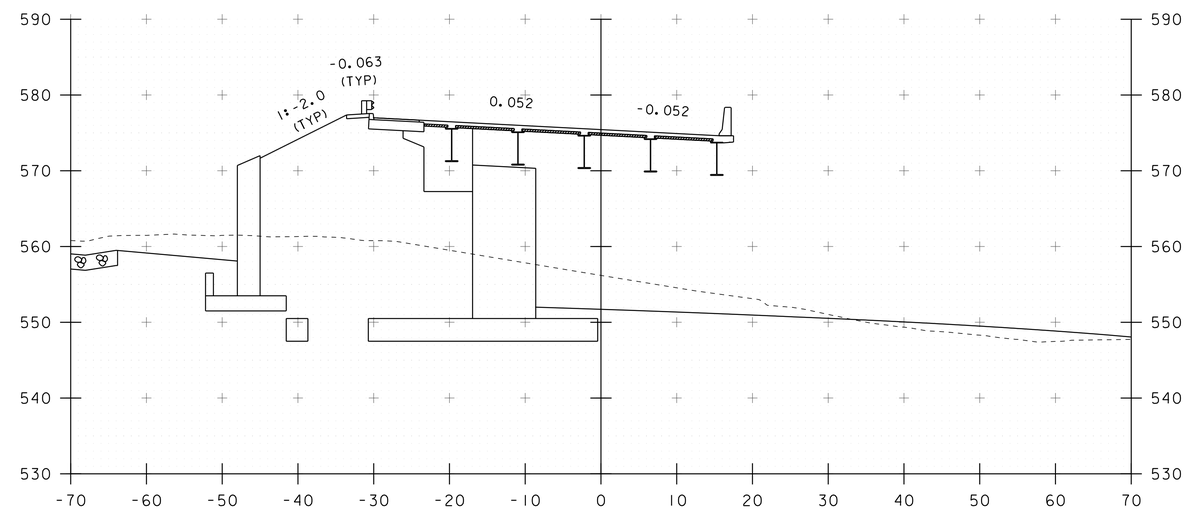

151+25

END BRIDGE 151+34.12

STA. 150+75 TO STA. 151+50

PROJECT NAME: HARTFORD	
PROJECT NUMBER: IM 091-2(79)	
FILE NAME: s12a132xsec.dgn	PLOT DATE: 15-DEC-2014
PROJECT LEADER: K. HIGGINS	DRAWN BY: K. FRIEDLAND
DESIGNED BY: G. LAROCHE	CHECKED BY: W. LAMMER
I-91 SOUTHBOUND CROSS SECTIONS	SHEET 143 OF 166

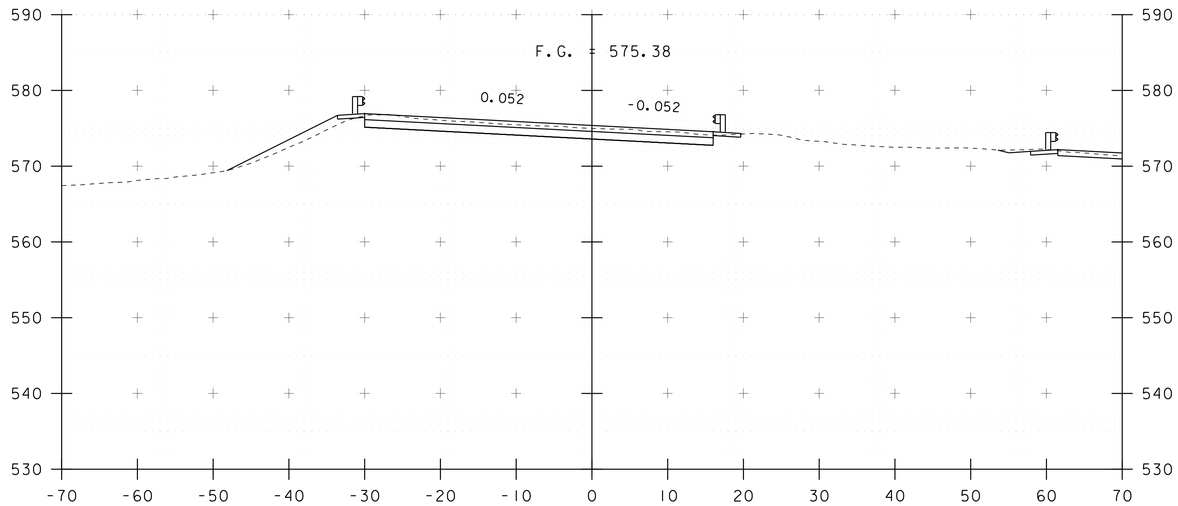

152+00

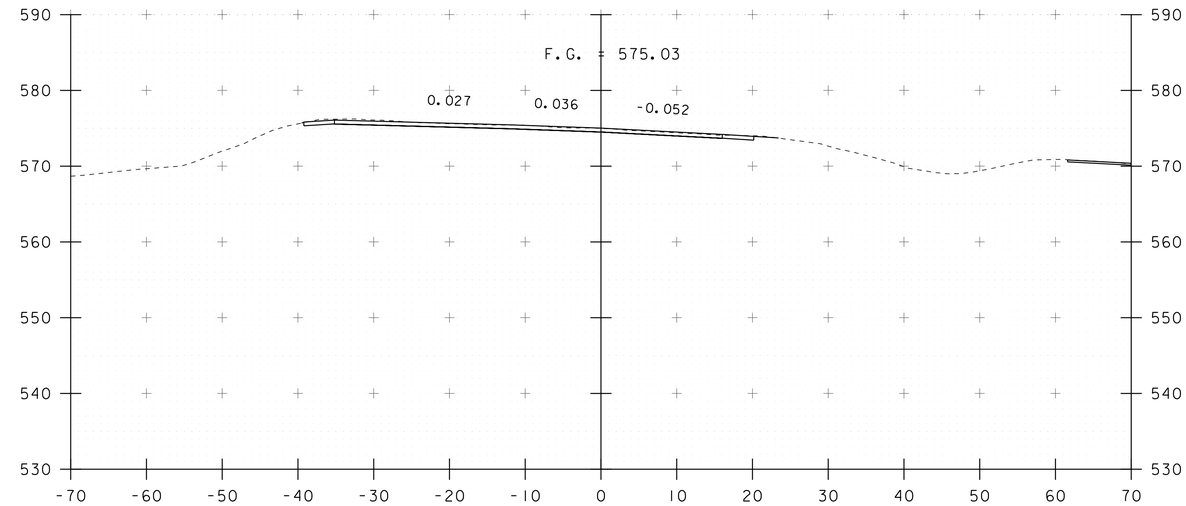

153+00

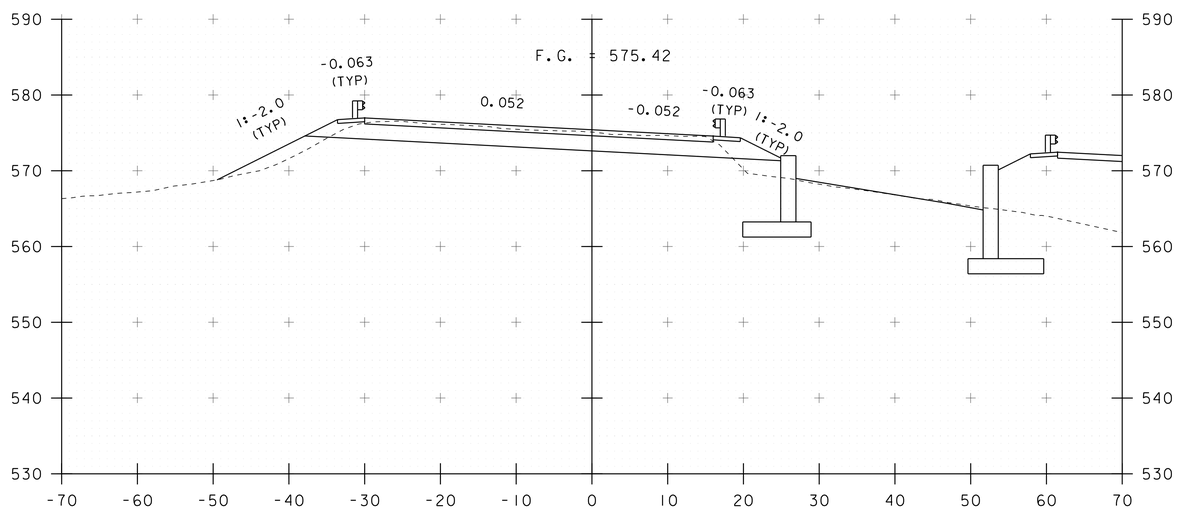

151+75
END PROJECT

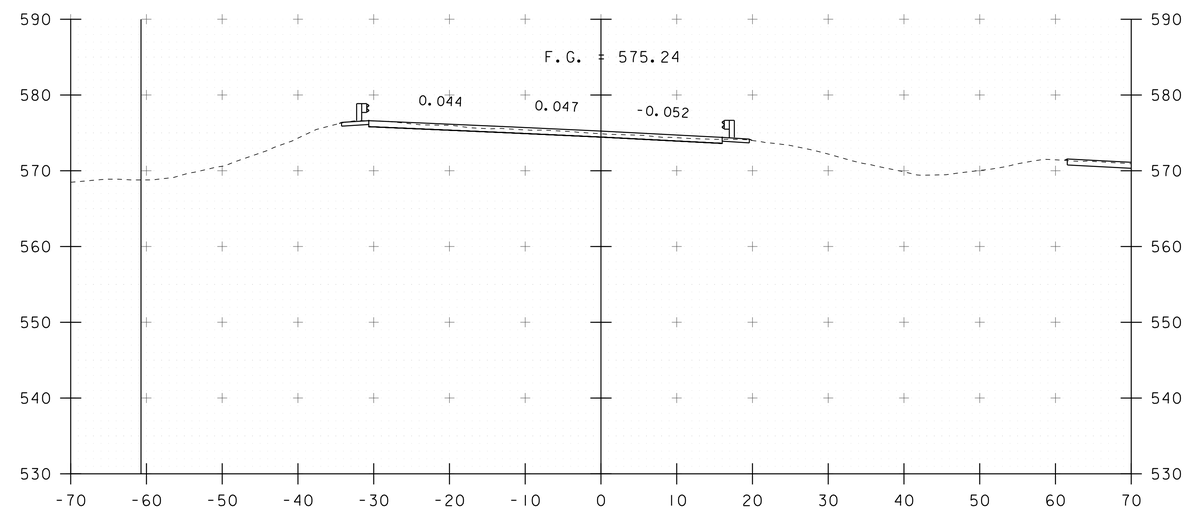

152+50

STA. 151+75 TO STA. 153+00

PROJECT NAME: HARTFORD	
PROJECT NUMBER: IM 091-2(79)	
FILE NAME: s12a132xsec.dgn	PLOT DATE: 15-DEC-2014
PROJECT LEADER: K. HIGGINS	DRAWN BY: K. FRIEDLAND
DESIGNED BY: G. LAROCHE	CHECKED BY: W. LAMMER
I-91 SOUTHBOUND CROSS SECTIONS	SHEET 144 OF 166

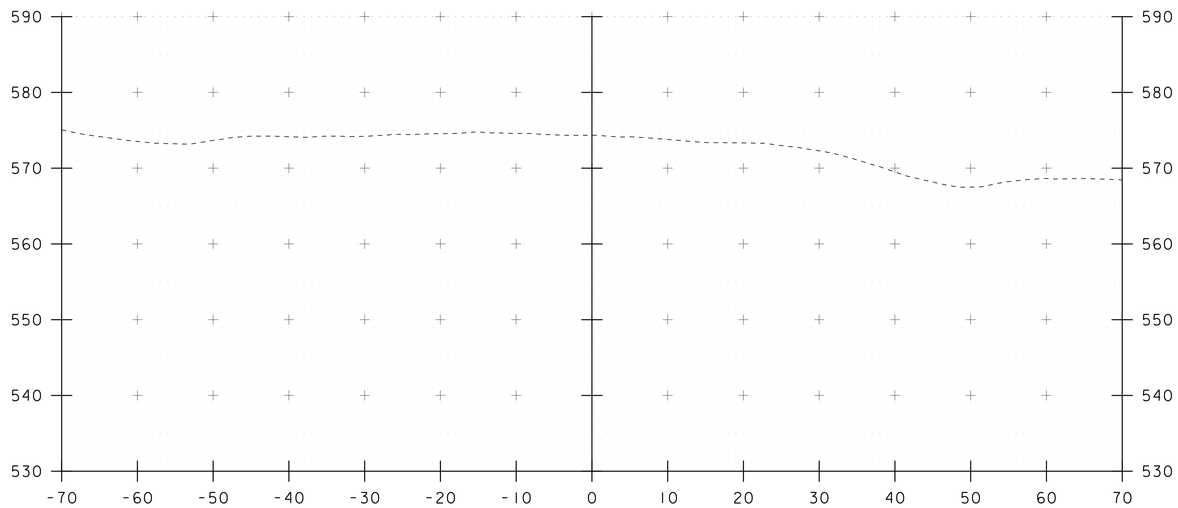

154+00

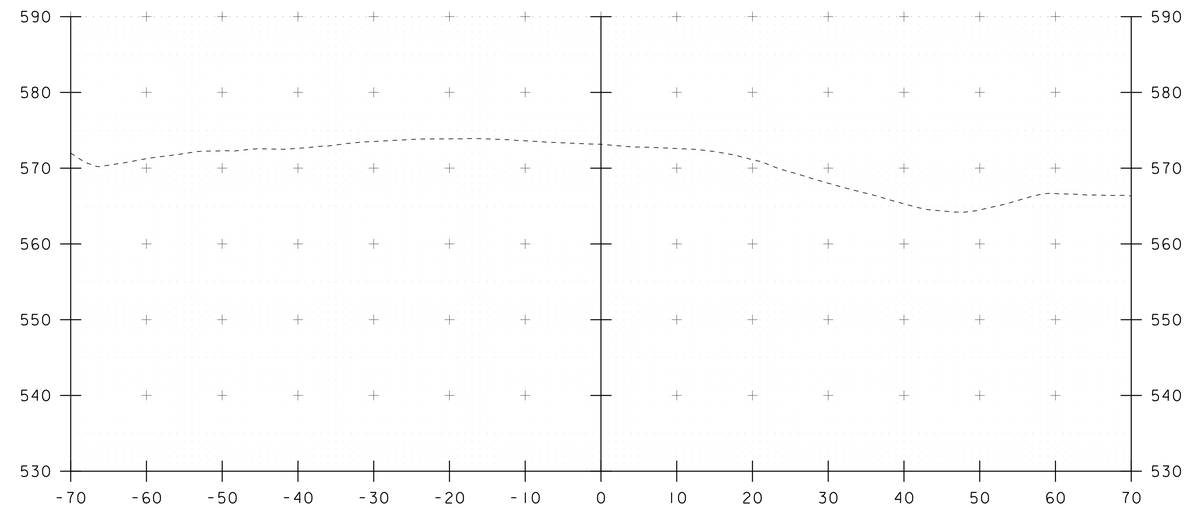

155+00

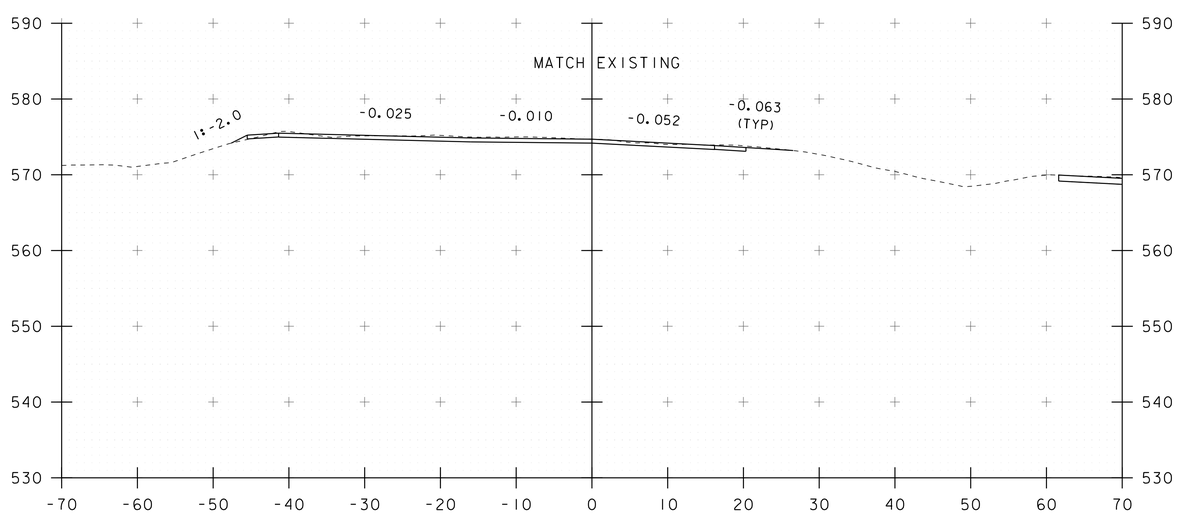

153+50

END APPROACH / PAVEMENT

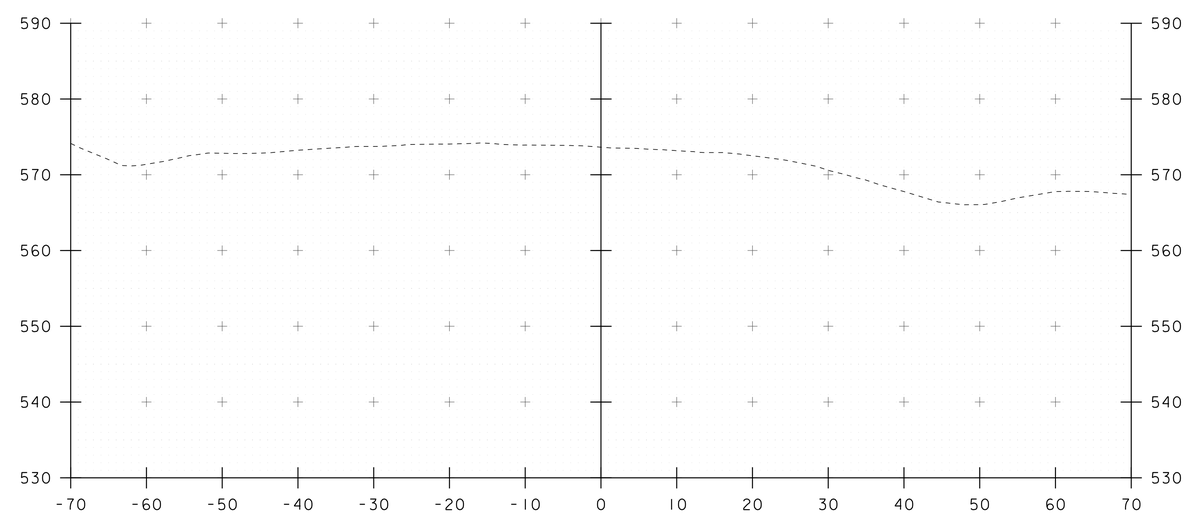

154+50

STA. 153+50 TO STA. 155+00

PROJECT NAME: HARTFORD	
PROJECT NUMBER: IM 091-2(79)	
FILE NAME: s12a132xsec.dgn	PLOT DATE: 15-DEC-2014
PROJECT LEADER: K. HIGGINS	DRAWN BY: K. FRIEDLAND
DESIGNED BY: G. LAROCHE	CHECKED BY: W. LAMMER
I-91 SOUTHBOUND CROSS SECTIONS	SHEET 145 OF 166

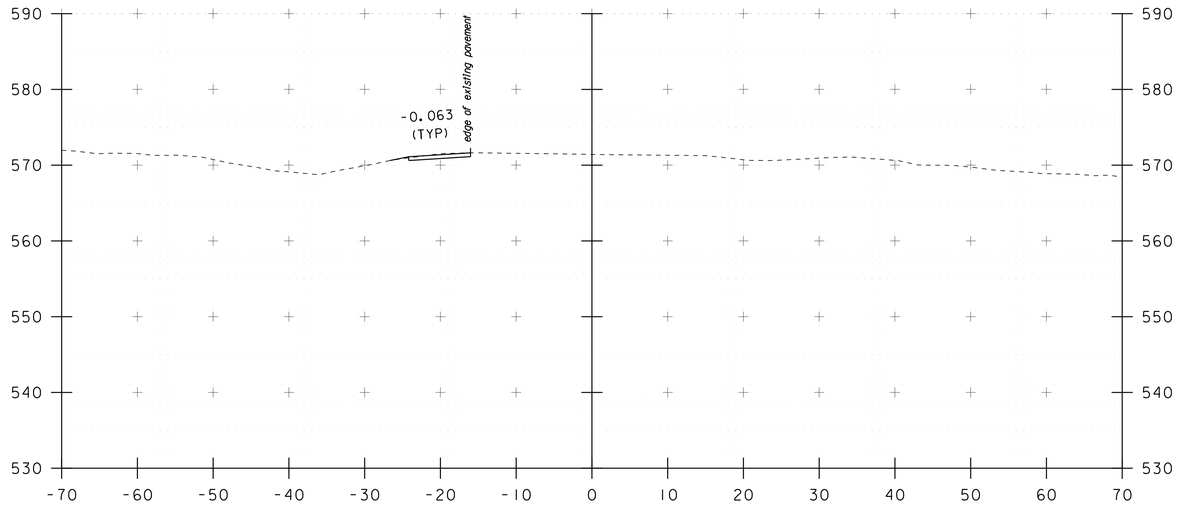

246+50

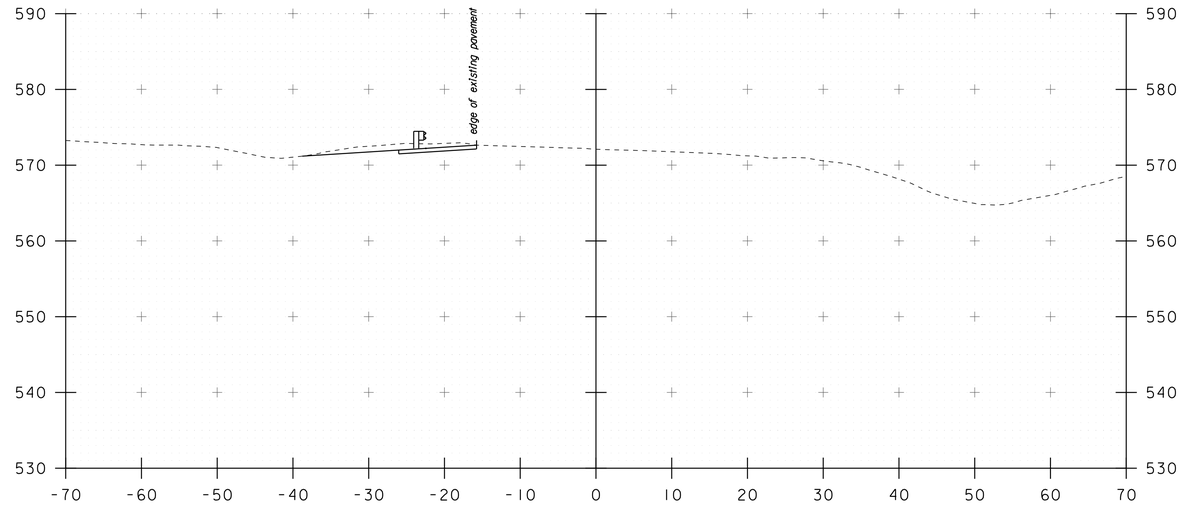

247+50

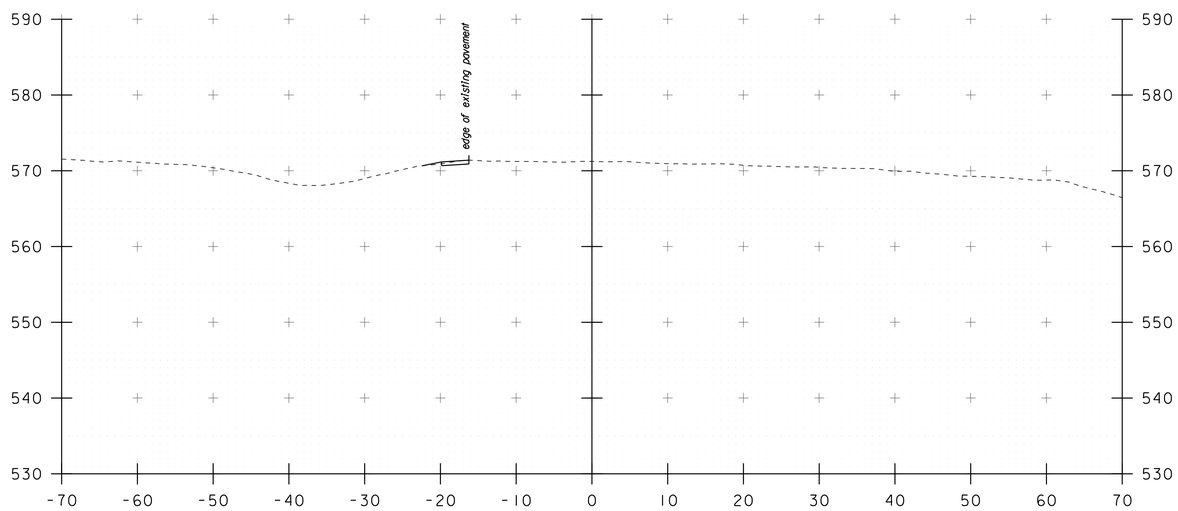

246+25
BEGIN APPROACH 246+05

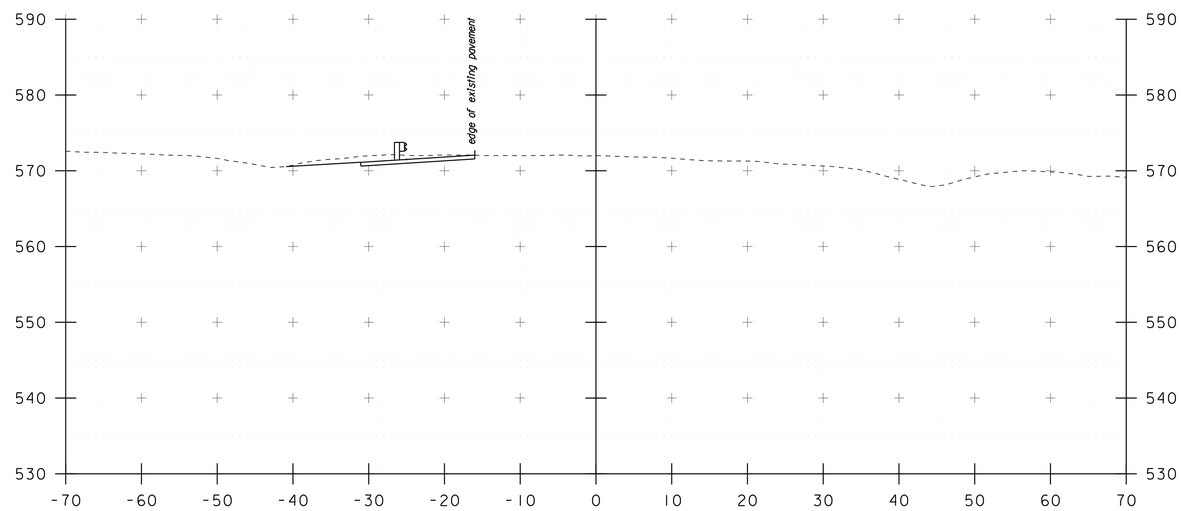

247+00

STA. 246+25 TO STA. 247+50

PROJECT NAME: HARTFORD	
PROJECT NUMBER: IM 091-2(79)	
FILE NAME: s12a132xsec.dgn	PLOT DATE: 15-DEC-2014
PROJECT LEADER: K. HIGGINS	DRAWN BY: K. FRIEDLAND
DESIGNED BY: G. LAROCHE	CHECKED BY: W. LAMMER
I-91 NORTHBOUND CROSS SECTIONS	SHEET 146 OF 166

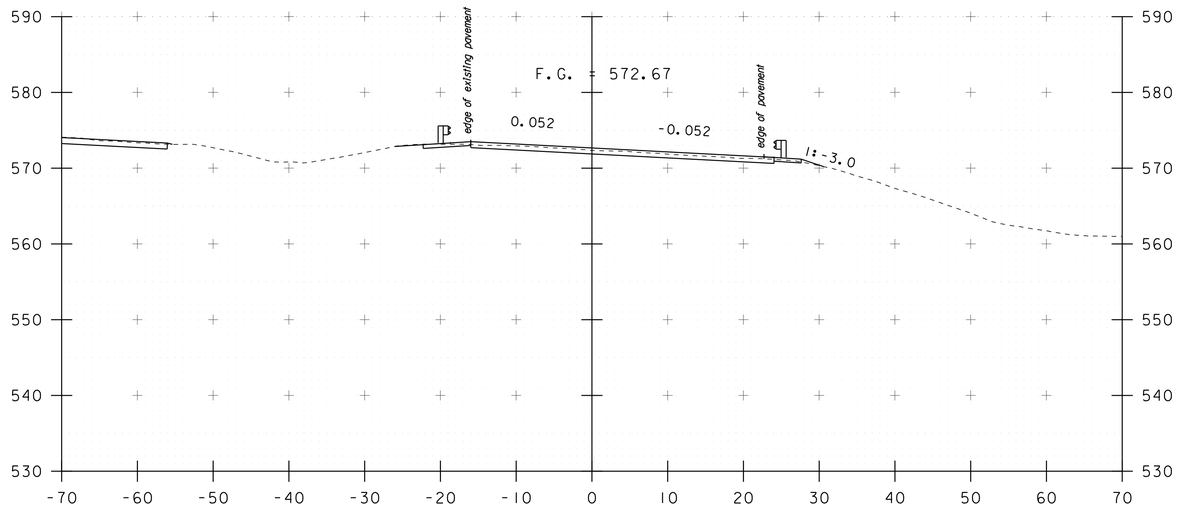

248+50

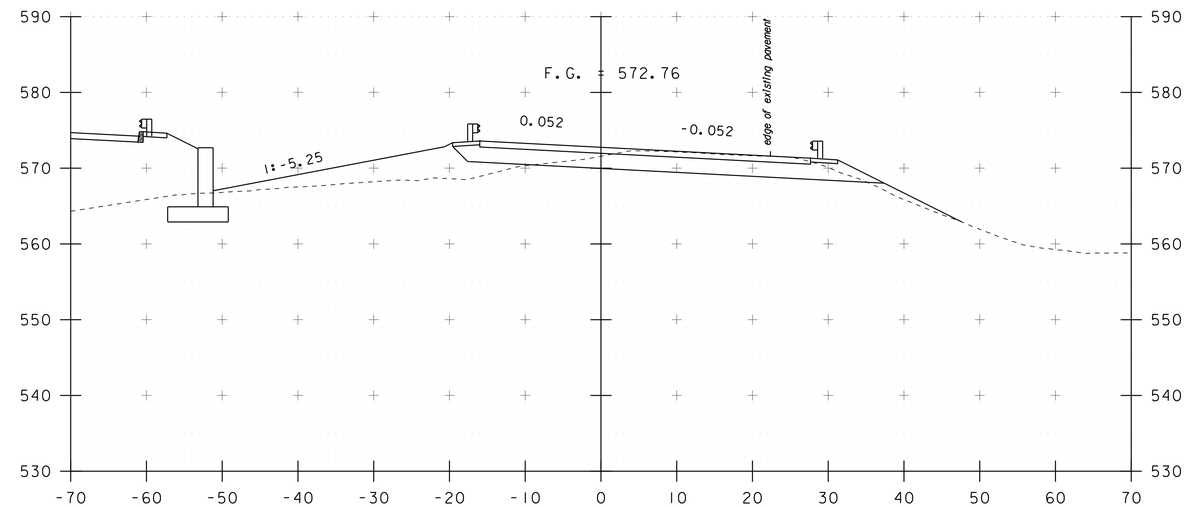

249+50
BEGIN PROJECT

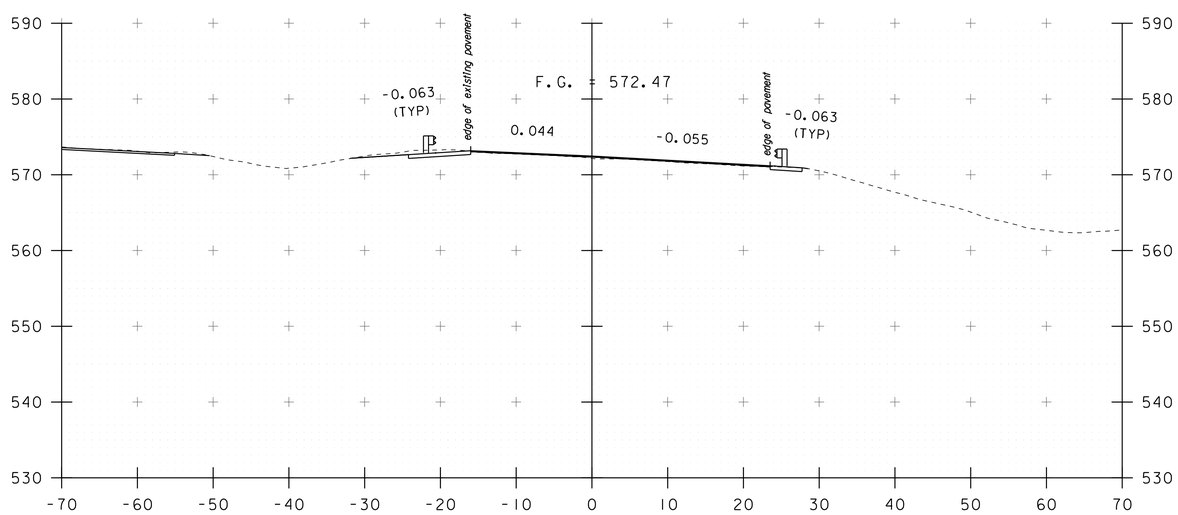

248+00
BEGIN PAVEMENT 247+75

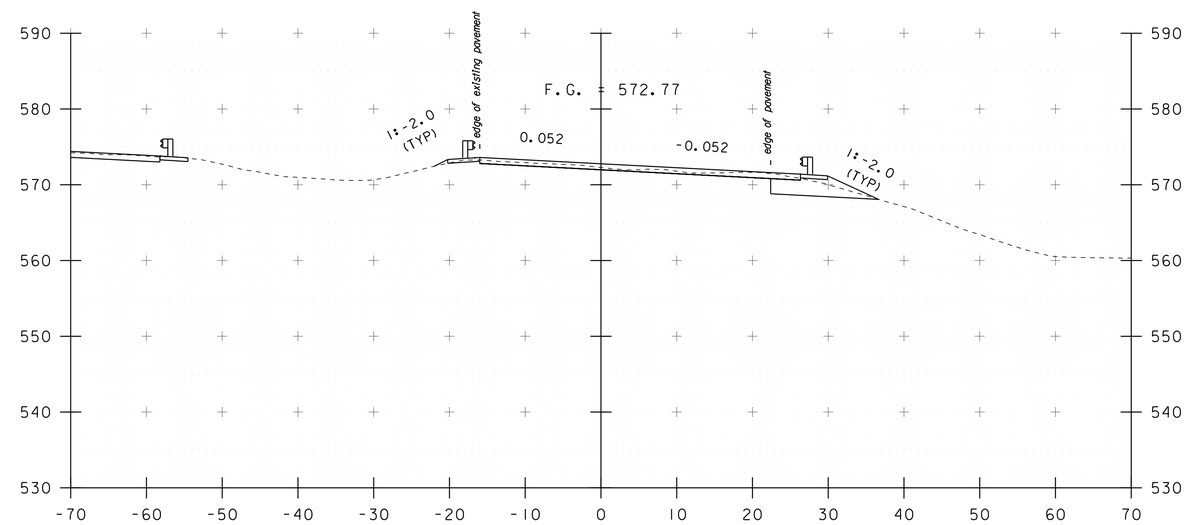

249+00

STA. 248+00 TO STA. 249+50

PROJECT NAME: HARTFORD	
PROJECT NUMBER: IM 091-2(79)	
FILE NAME: s12a132xsec.dgn	PLOT DATE: 15-DEC-2014
PROJECT LEADER: K. HIGGINS	DRAWN BY: K. FRIEDLAND
DESIGNED BY: G. LAROCHE	CHECKED BY: W. LAMMER
I-91 NORTHBOUND CROSS SECTIONS	SHEET 147 OF 166

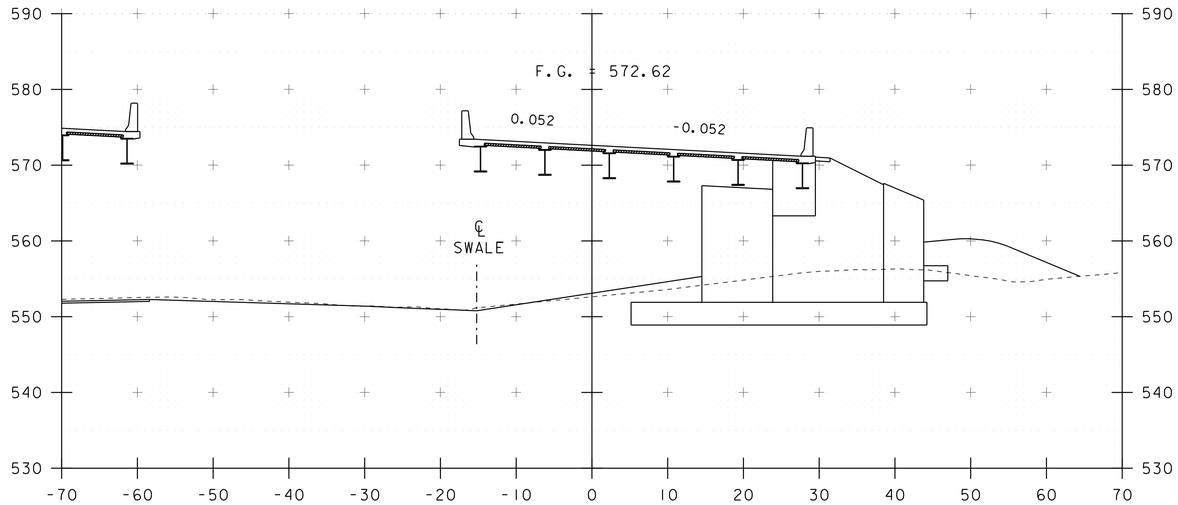

250+00
BEGIN BRIDGE 249+89.46

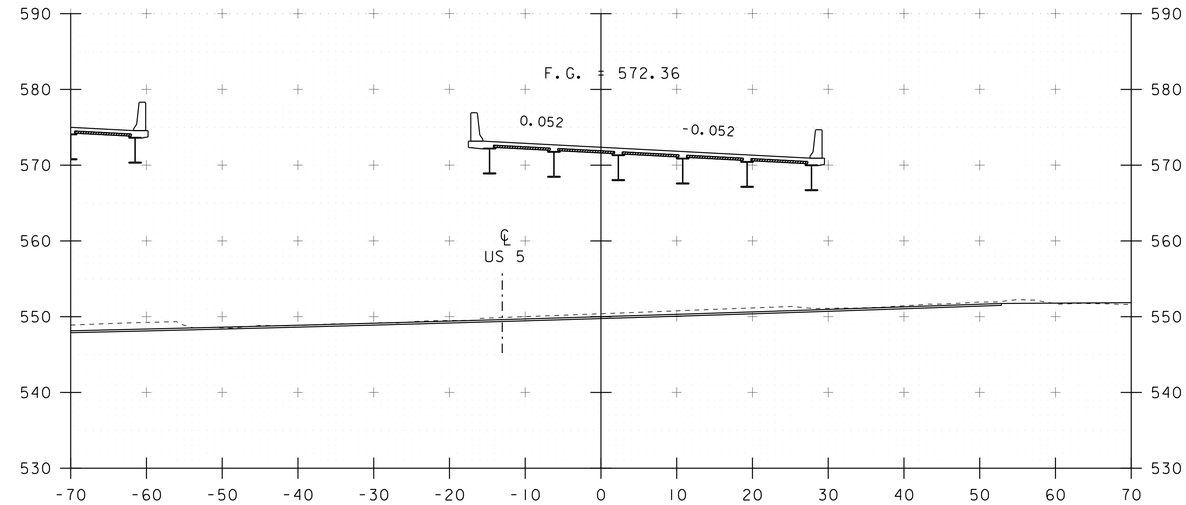

250+50

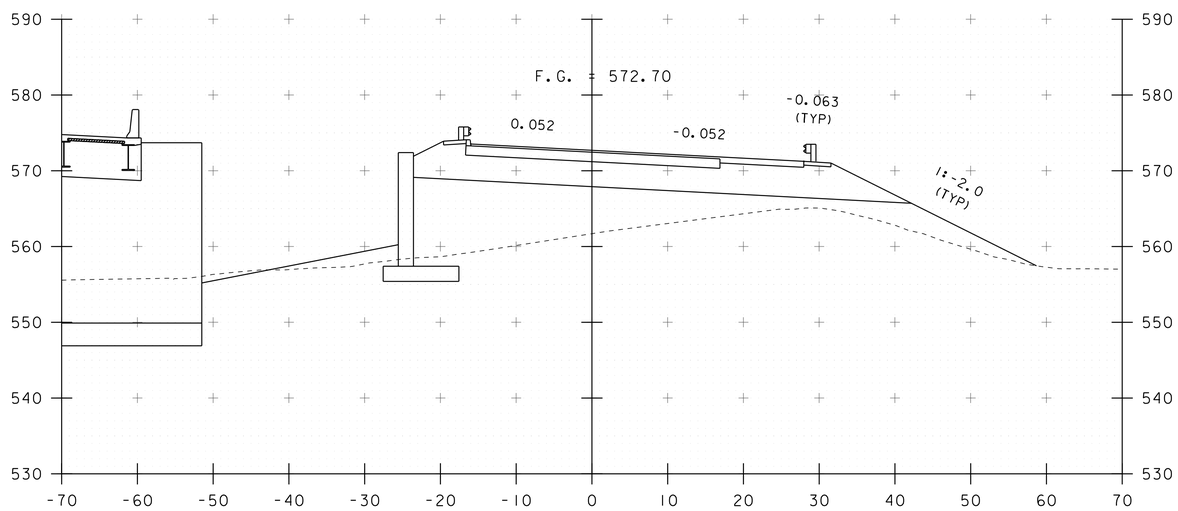

249+75

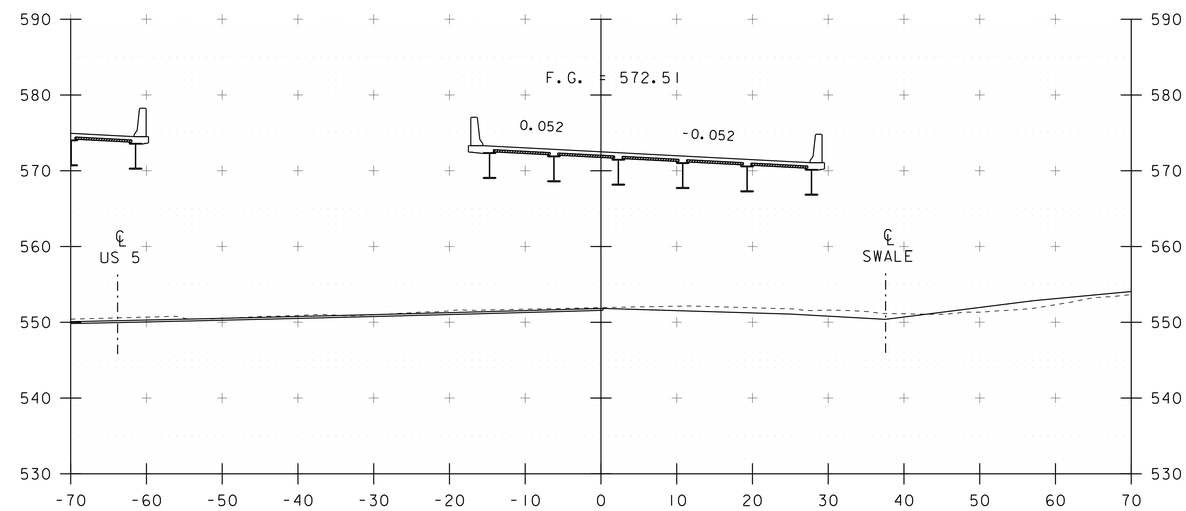

250+25

STA. 249+75 TO STA. 250+50

PROJECT NAME: HARTFORD	
PROJECT NUMBER: IM 091-2(79)	
FILE NAME: s12a132xsec.dgn	PLOT DATE: 15-DEC-2014
PROJECT LEADER: K. HIGGINS	DRAWN BY: K. FRIEDLAND
DESIGNED BY: G. LAROCHE	CHECKED BY: W. LAMMER
I-91 NORTHBOUND CROSS SECTIONS	SHEET 148 OF 166

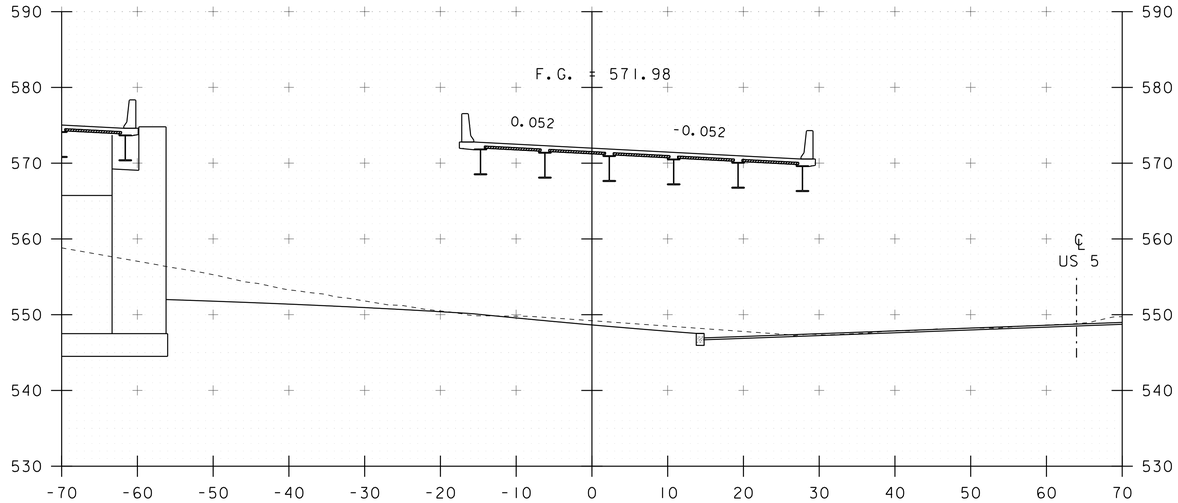

251+00

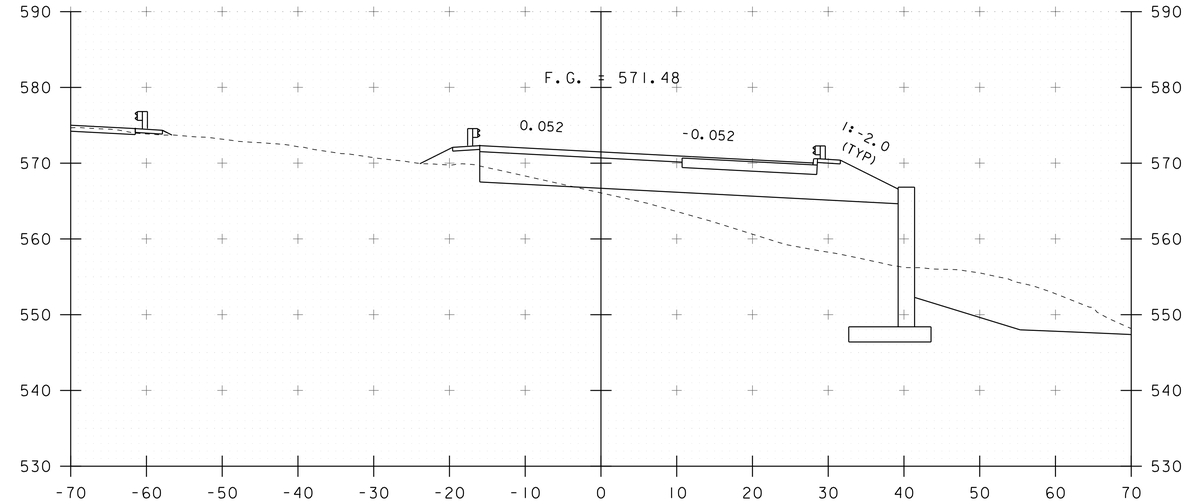

251+50

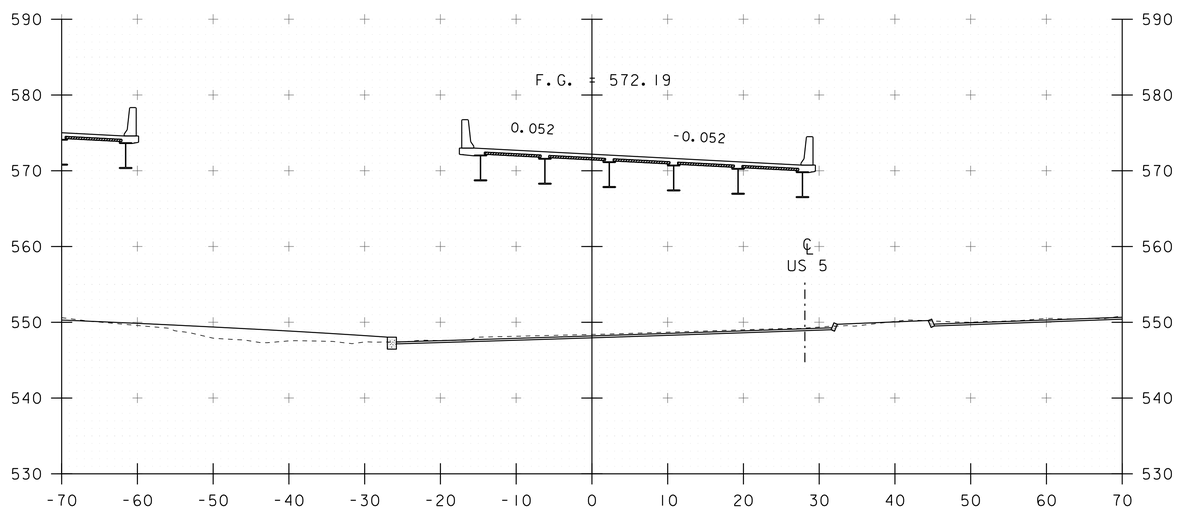

250+75

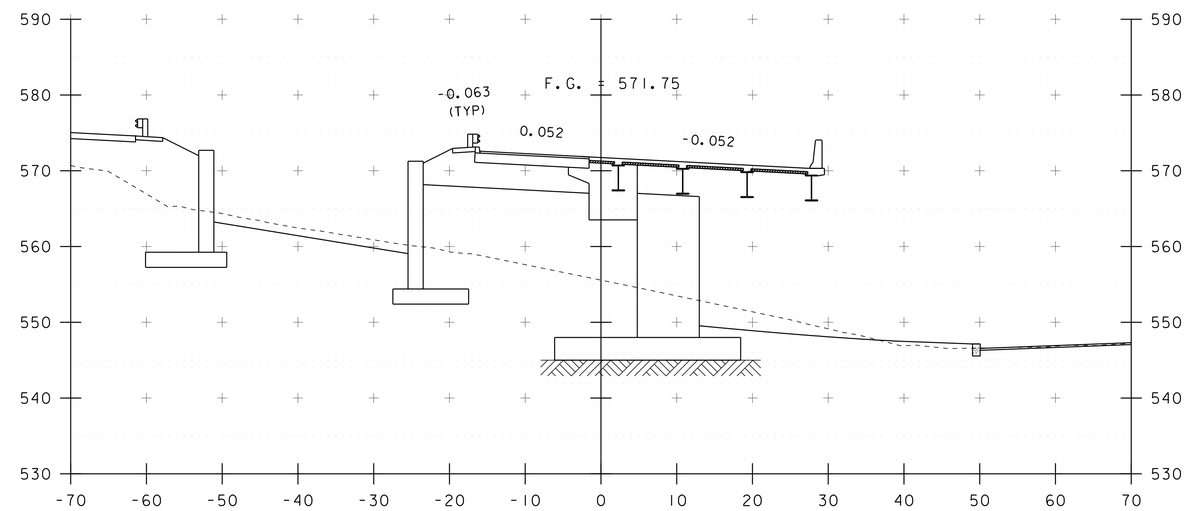

251+25

END BRIDGE 251+25.62

STA. 250+75 TO STA. 251+50

PROJECT NAME: HARTFORD	
PROJECT NUMBER: IM 091-2(79)	
FILE NAME: s12a132xsec.dgn	PLOT DATE: 15-DEC-2014
PROJECT LEADER: K. HIGGINS	DRAWN BY: K. FRIEDLAND
DESIGNED BY: G. LAROCHE	CHECKED BY: W. LAMMER
I-91 NORTHBOUND CROSS SECTIONS	SHEET 149 OF 166

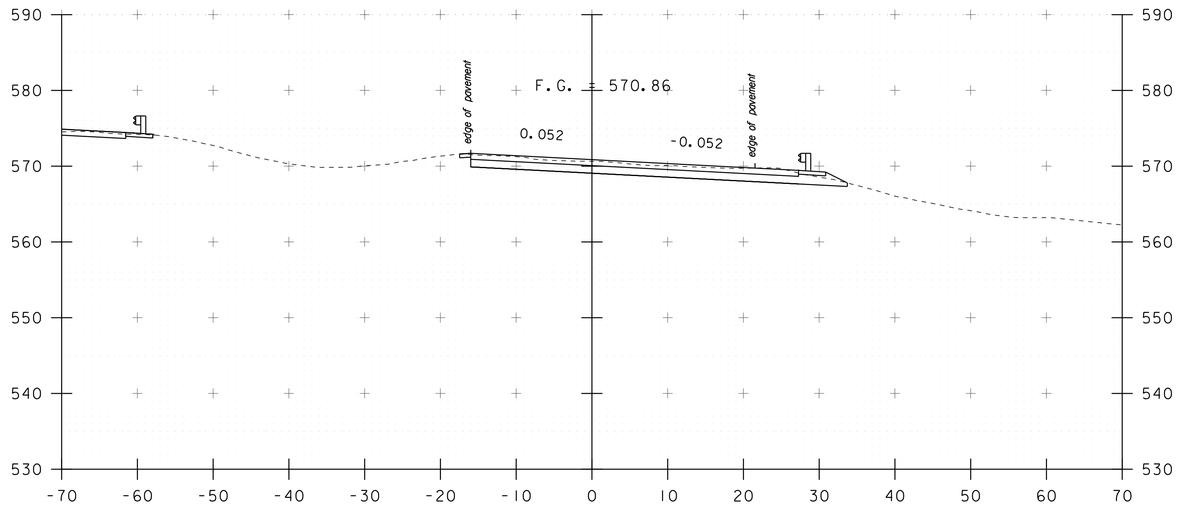

252+00

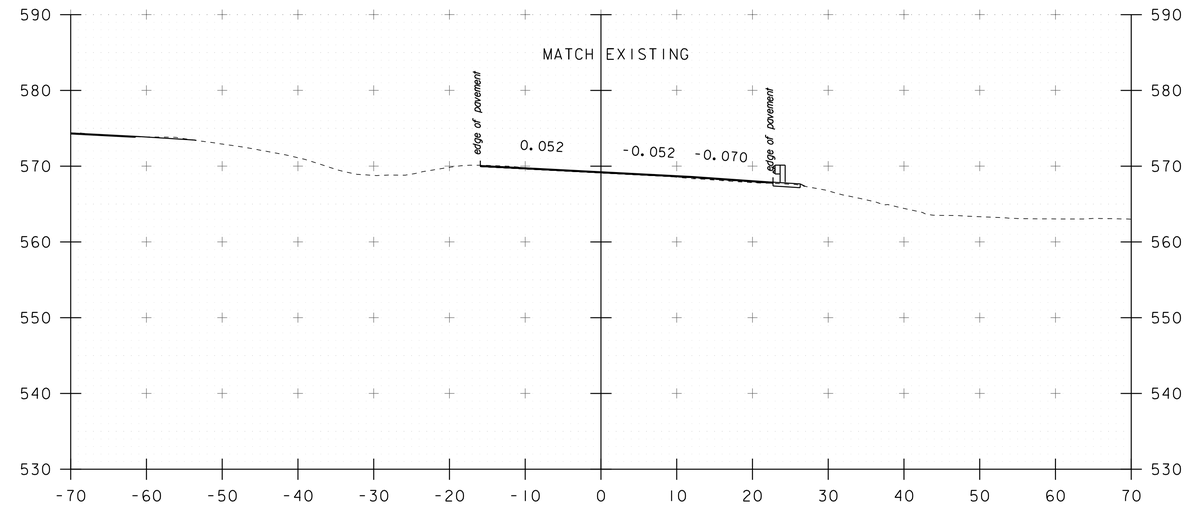

253+00
END APPROACH / PAVEMENT

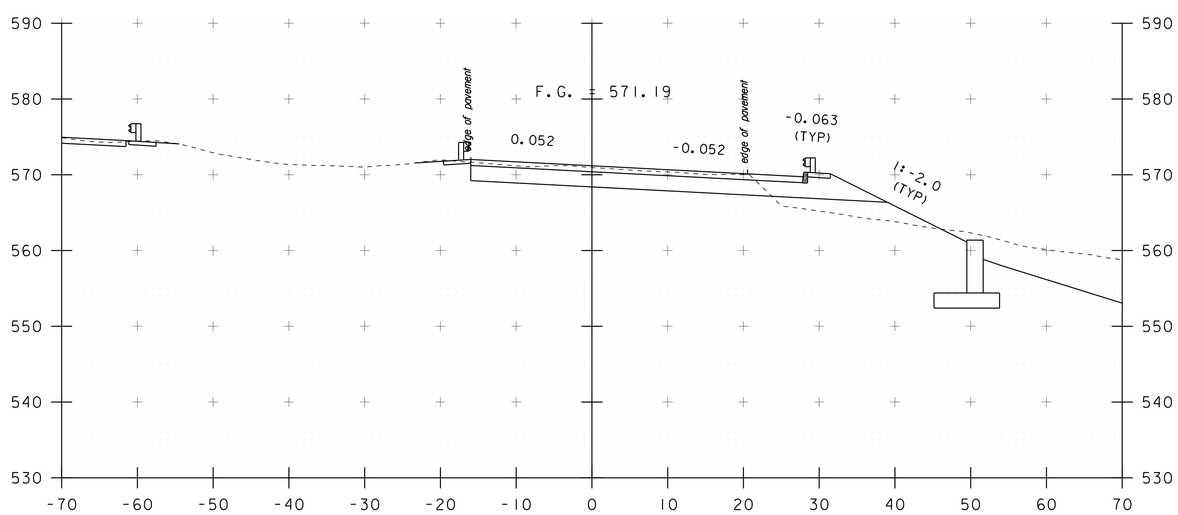

251+75
END PROJECT

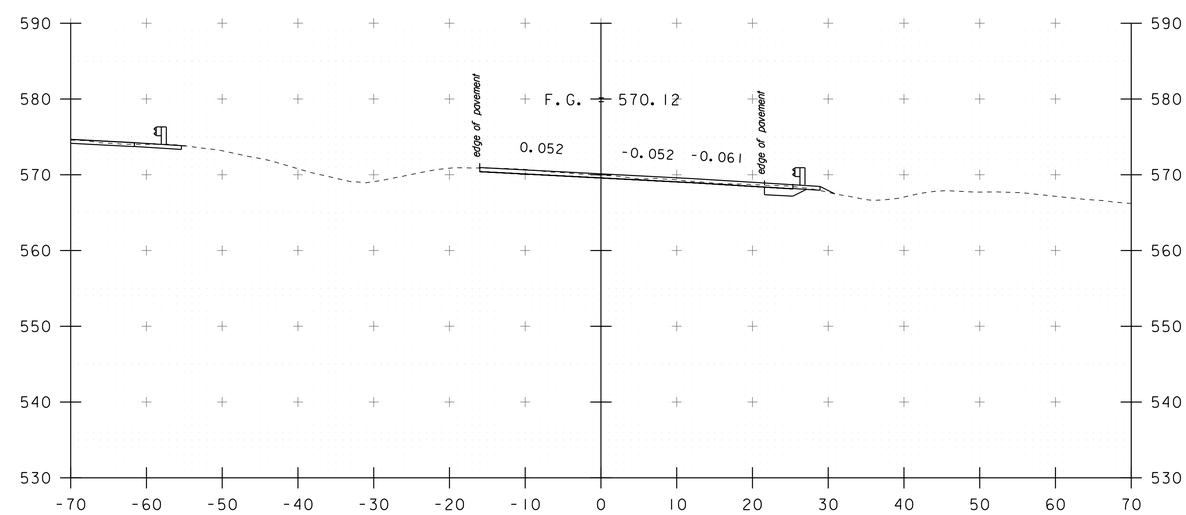

252+50

STA. 251+75 TO STA. 253+00

PROJECT NAME: HARTFORD	
PROJECT NUMBER: IM 091-2(79)	
FILE NAME: s12a132xsec.dgn	PLOT DATE: 15-DEC-2014
PROJECT LEADER: K. HIGGINS	DRAWN BY: K. FRIEDLAND
DESIGNED BY: G. LAROCHE	CHECKED BY: W. LAMMER
I-91 NORTHBOUND CROSS SECTIONS	SHEET 150 OF 166

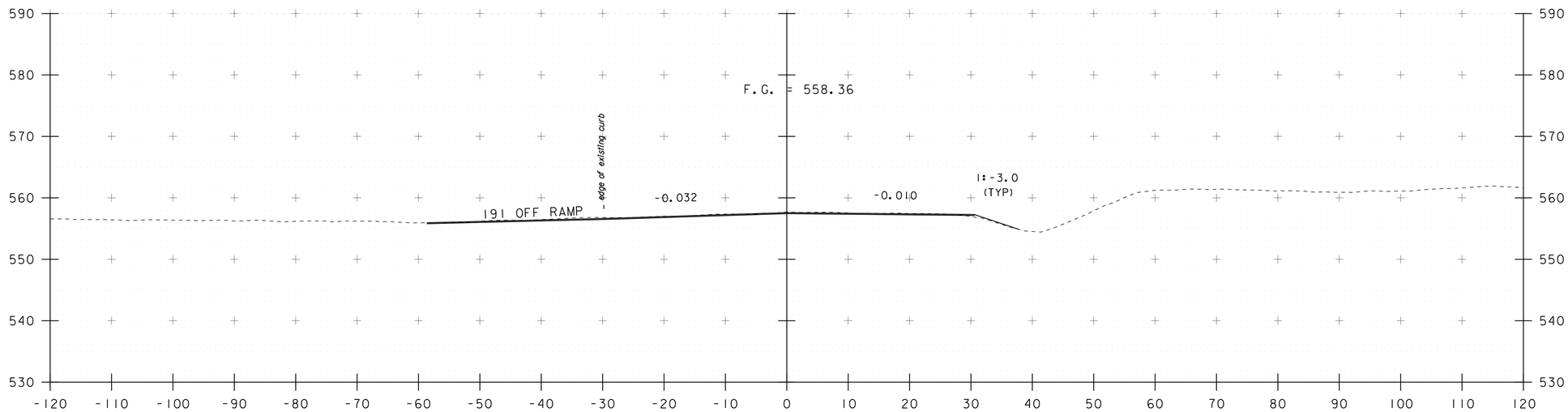

348+50

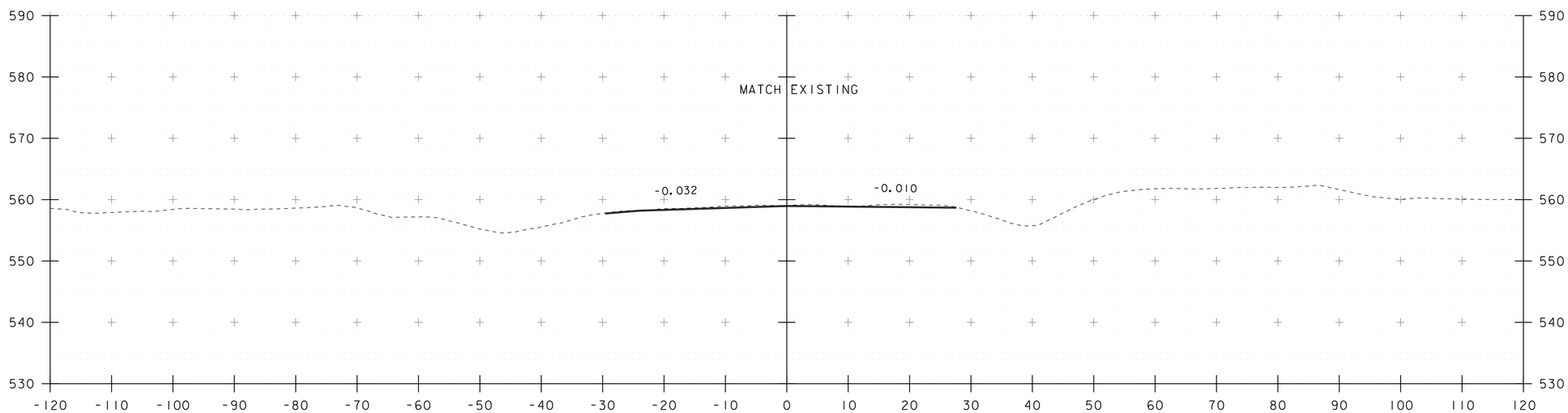

BEING PAVEMENT
348+00

STA. 348+00 TO STA. 348+50

PROJECT NAME: HARTFORD	
PROJECT NUMBER: IM 091-2(79)	
FILE NAME: s12a132xsec.dgn	PLOT DATE: 15-DEC-2014
PROJECT LEADER: K. HIGGINS	DRAWN BY: K. FRIEDLAND
DESIGNED BY: G. LAROCHE	CHECKED BY: W. LAMMER
US 5 CROSS SECTIONS	SHEET 151 OF 166

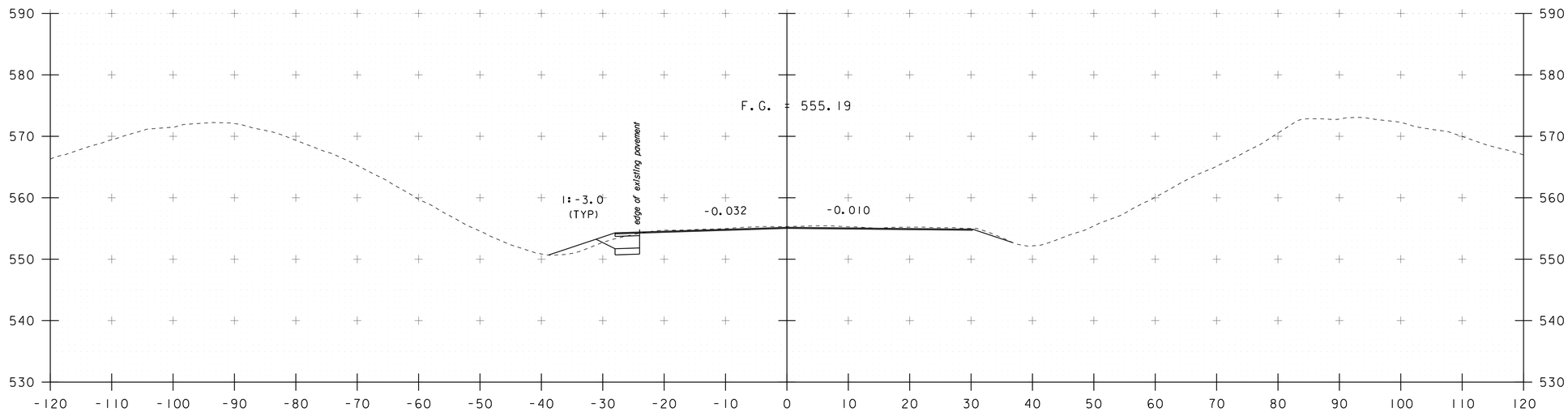

349+50

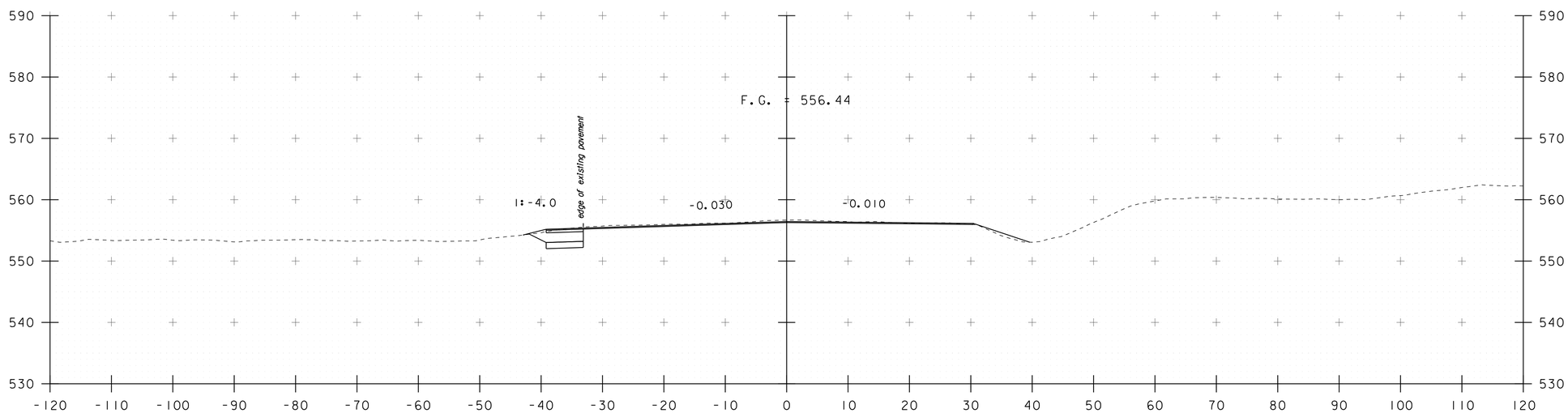

349+00

PROJECT NAME: HARTFORD	
PROJECT NUMBER: IM 091-2(79)	
FILE NAME: s12a132xsec.dgn	PLOT DATE: 15-DEC-2014
PROJECT LEADER: K. HIGGINS	DRAWN BY: K. FRIEDLAND
DESIGNED BY: G. LAROCHE	CHECKED BY: W. LAMMER
US 5 CROSS SECTIONS	SHEET 152 OF 166

STA. 349+00 TO STA. 349+50

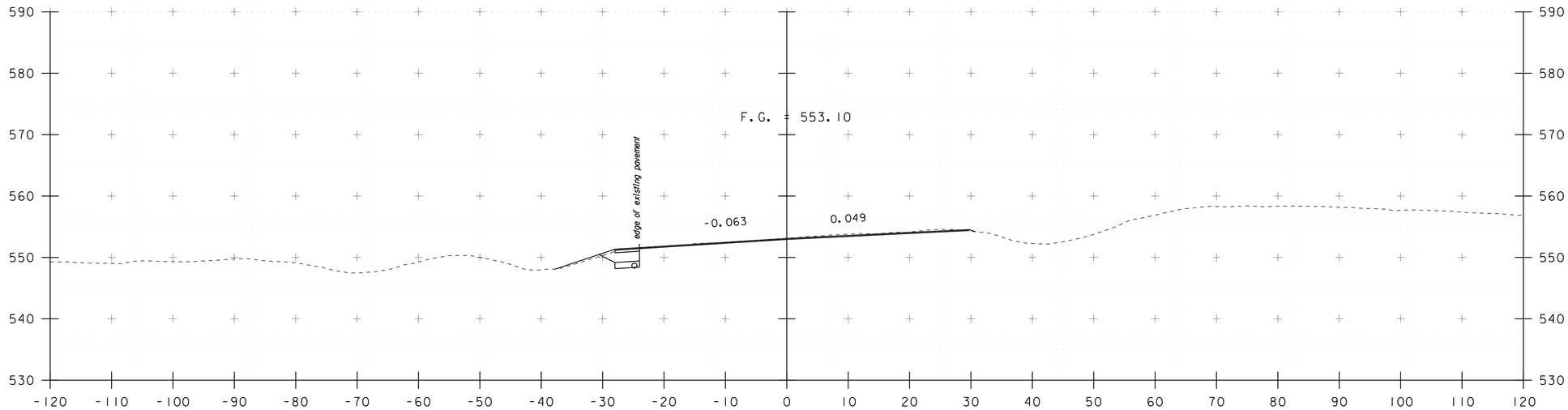

350+50

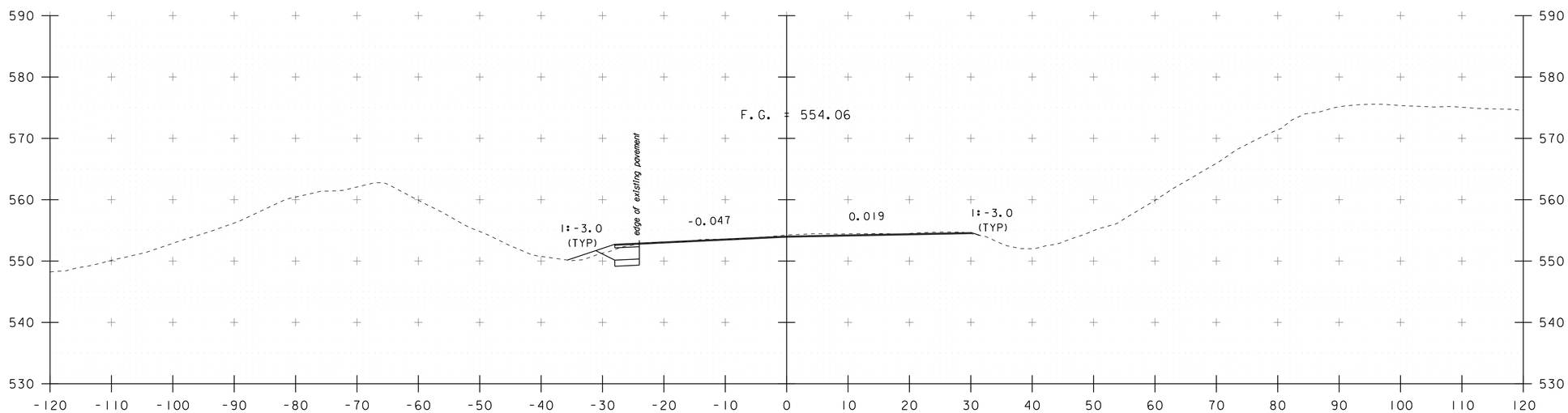

350+00

PROJECT NAME: HARTFORD	
PROJECT NUMBER: IM 091-2(79)	
FILE NAME: s12a132xsec.dgn	PLOT DATE: 15-DEC-2014
PROJECT LEADER: K. HIGGINS	DRAWN BY: K. FRIEDLAND
DESIGNED BY: G. LAROCHE	CHECKED BY: W. LAMMER
US 5 CROSS SECTIONS	SHEET 153 OF 166

STA. 350+00 TO STA. 350+50

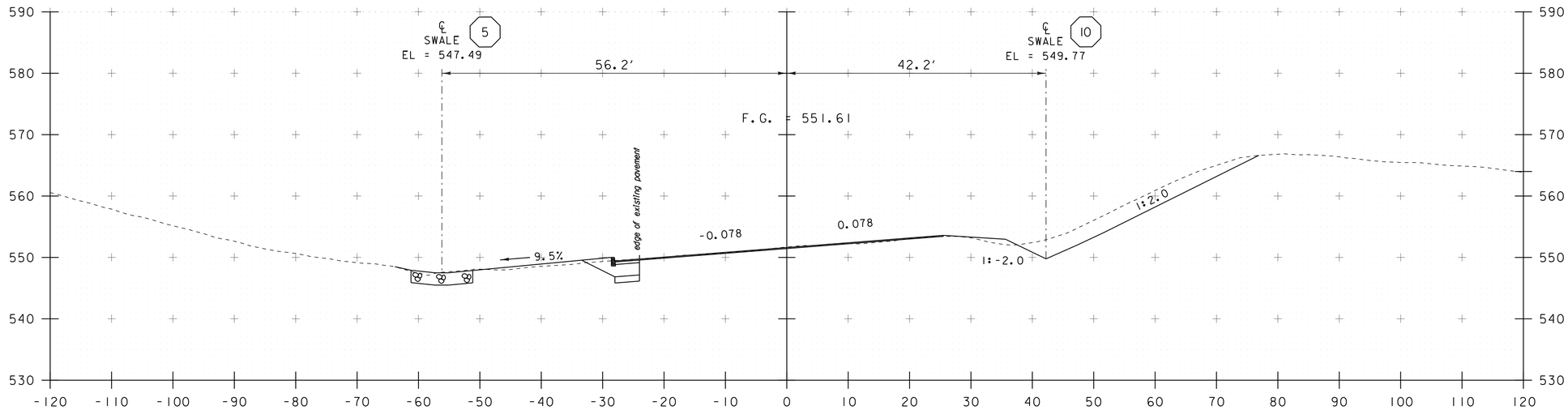

351+50

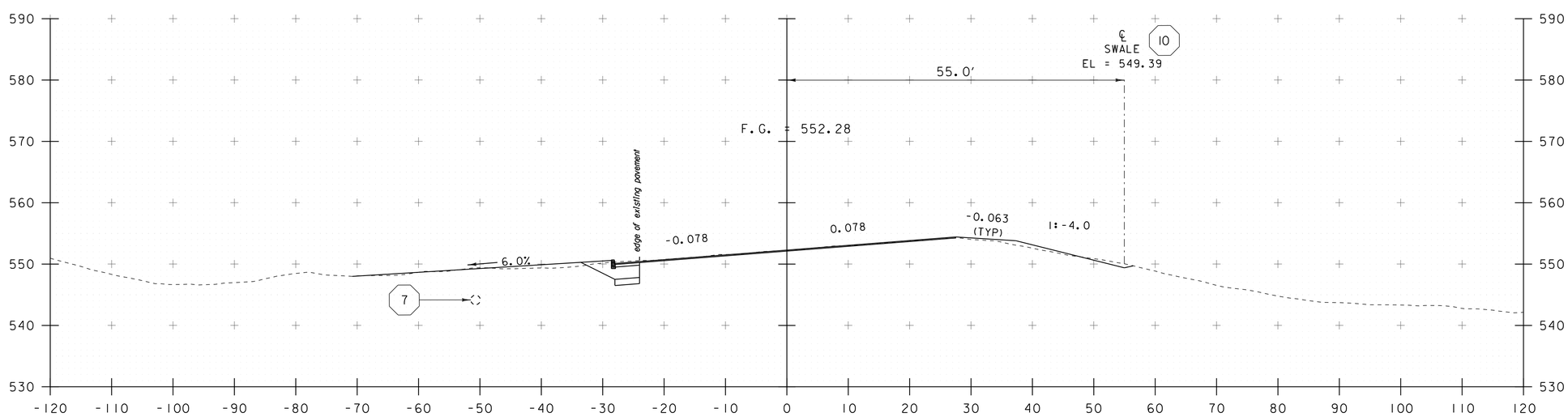

351+00

STA. 351+00 TO STA. 351+50

PROJECT NAME: HARTFORD	
PROJECT NUMBER: IM 091-2(79)	
FILE NAME: s12a132xsec.dgn	PLOT DATE: 15-DEC-2014
PROJECT LEADER: K. HIGGINS	DRAWN BY: K. FRIEDLAND
DESIGNED BY: G. LAROCHE	CHECKED BY: W. LAMMER
US 5 CROSS SECTIONS	SHEET 154 OF 166

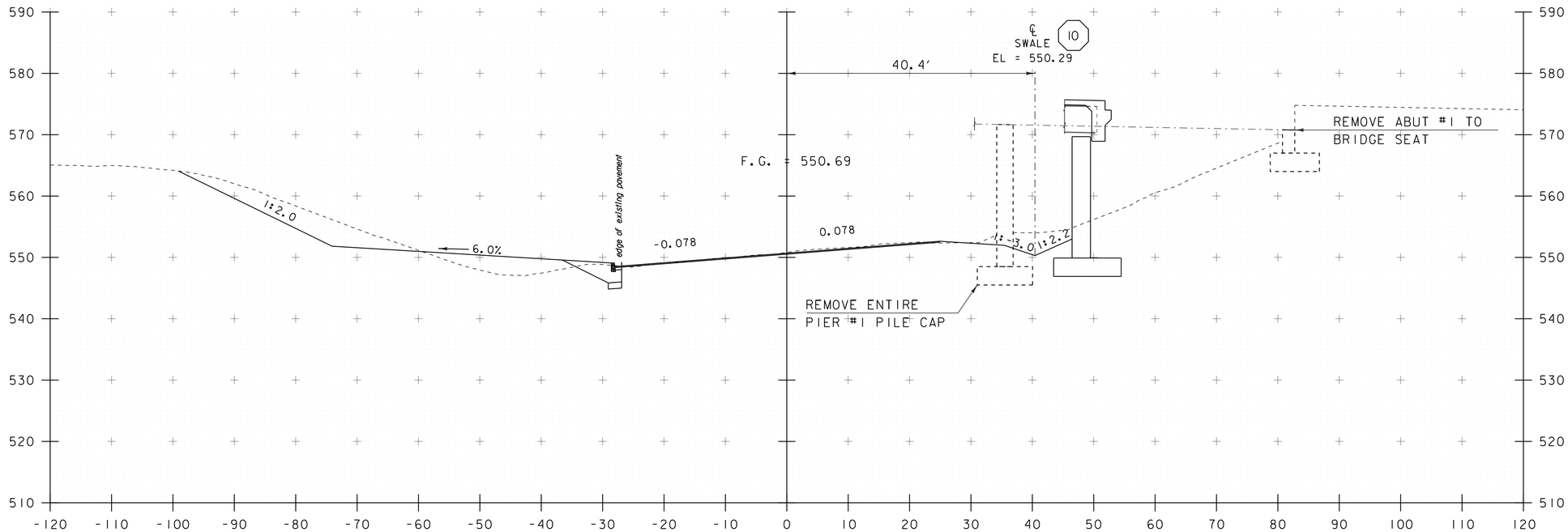

352+25

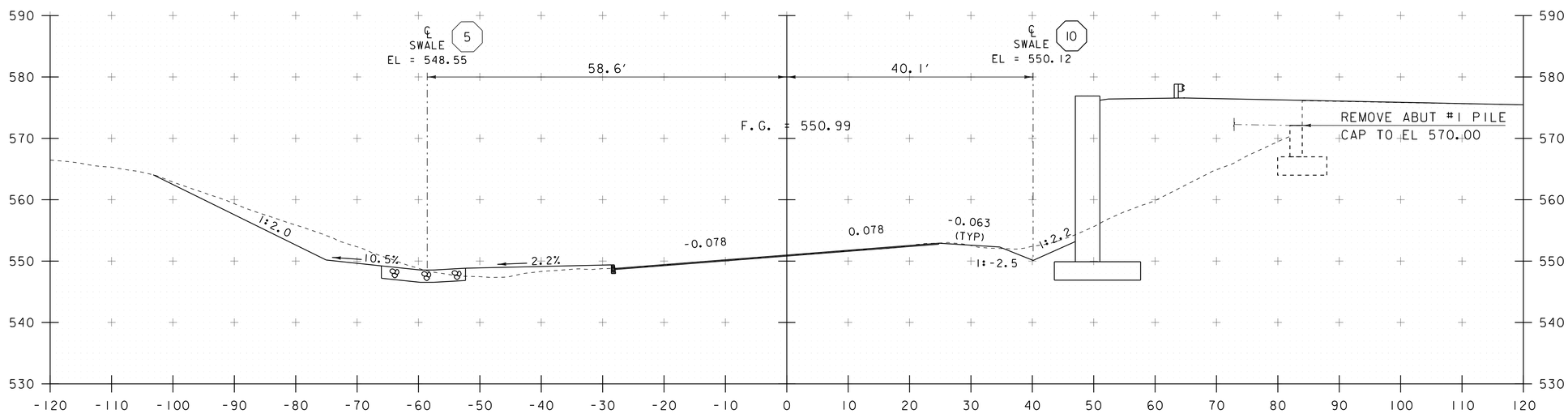

352+00

PROJECT NAME: HARTFORD	
PROJECT NUMBER: IM 091-2(79)	
FILE NAME: s12a132xsec.dgn	PLOT DATE: 15-DEC-2014
PROJECT LEADER: K. HIGGINS	DRAWN BY: K. FRIEDLAND
DESIGNED BY: G. LAROCHE	CHECKED BY: W. LAMMER
US 5 CROSS SECTIONS	SHEET 155 OF 166

STA. 352+00 TO STA. 352+25

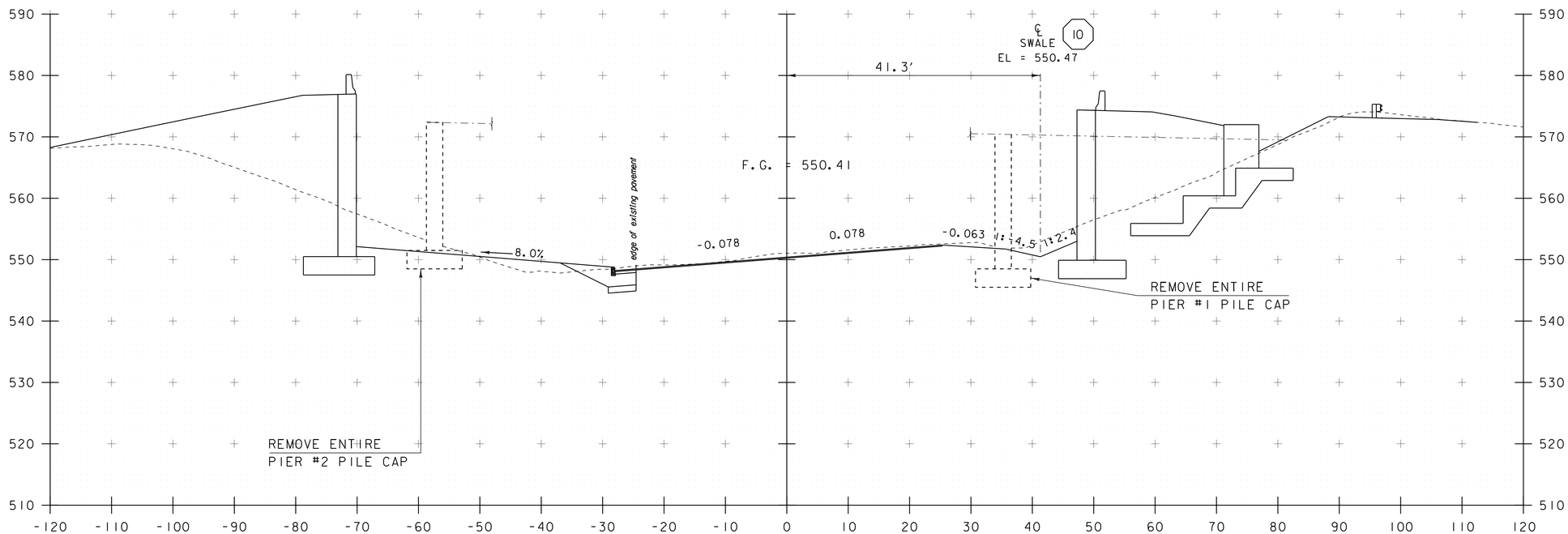

352+50

STA. 352+50 TO STA. 352+50

PROJECT NAME: HARTFORD	
PROJECT NUMBER: IM 091-2(79)	
FILE NAME: s12a132xsec.dgn	PLOT DATE: 15-DEC-2014
PROJECT LEADER: K. HIGGINS	DRAWN BY: K. FRIEDLAND
DESIGNED BY: G. LAROCHE	CHECKED BY: W. LAMMER
US 5 CROSS SECTIONS	SHEET 156 OF 166

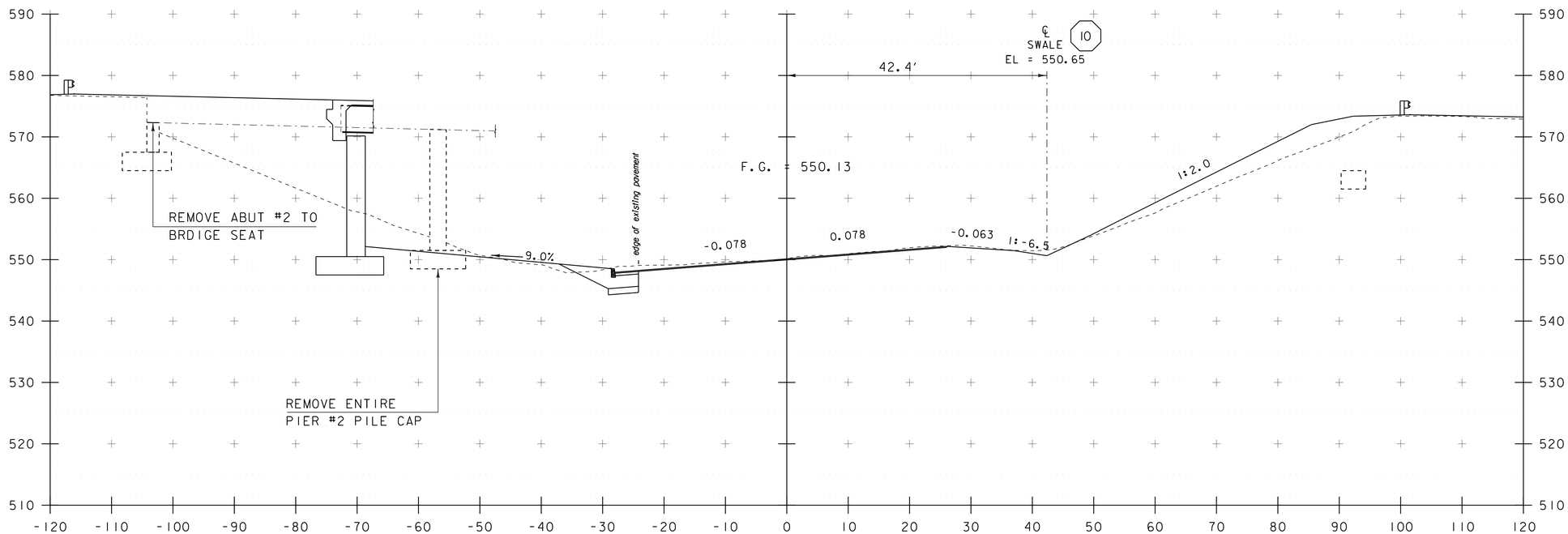

352+75

STA. 352+75 TO STA. 352+75

PROJECT NAME: HARTFORD	
PROJECT NUMBER: IM 091-2(79)	
FILE NAME: s12a132xsec.dgn	PLOT DATE: 15-DEC-2014
PROJECT LEADER: K. HIGGINS	DRAWN BY: K. FRIEDLAND
DESIGNED BY: G. LAROCHE	CHECKED BY: W. LAMMER
US 5 CROSS SECTIONS	SHEET 157 OF 166

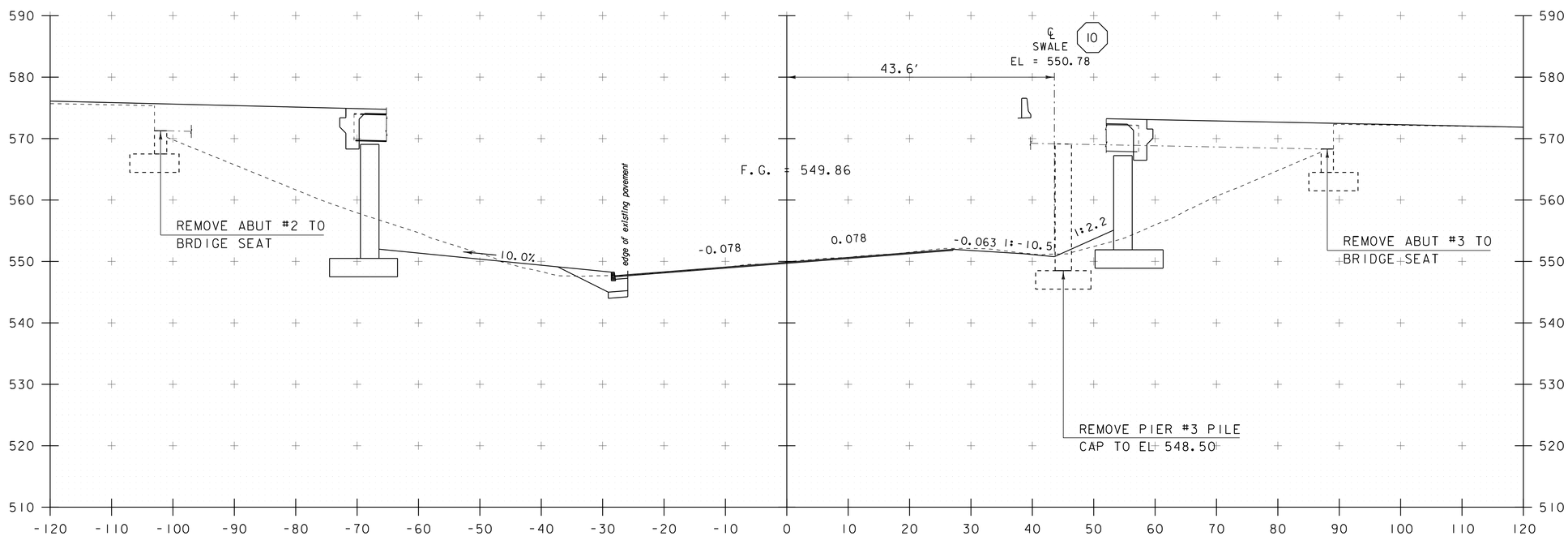

353+00

STA. 353+00 TO STA. 353+00

PROJECT NAME: HARTFORD	
PROJECT NUMBER: IM 091-2(79)	
FILE NAME: s12a132xsec.dgn	PLOT DATE: 15-DEC-2014
PROJECT LEADER: K. HIGGINS	DRAWN BY: K. FRIEDLAND
DESIGNED BY: G. LAROCHE	CHECKED BY: W. LAMMER
US 5 CROSS SECTIONS	SHEET 158 OF 166

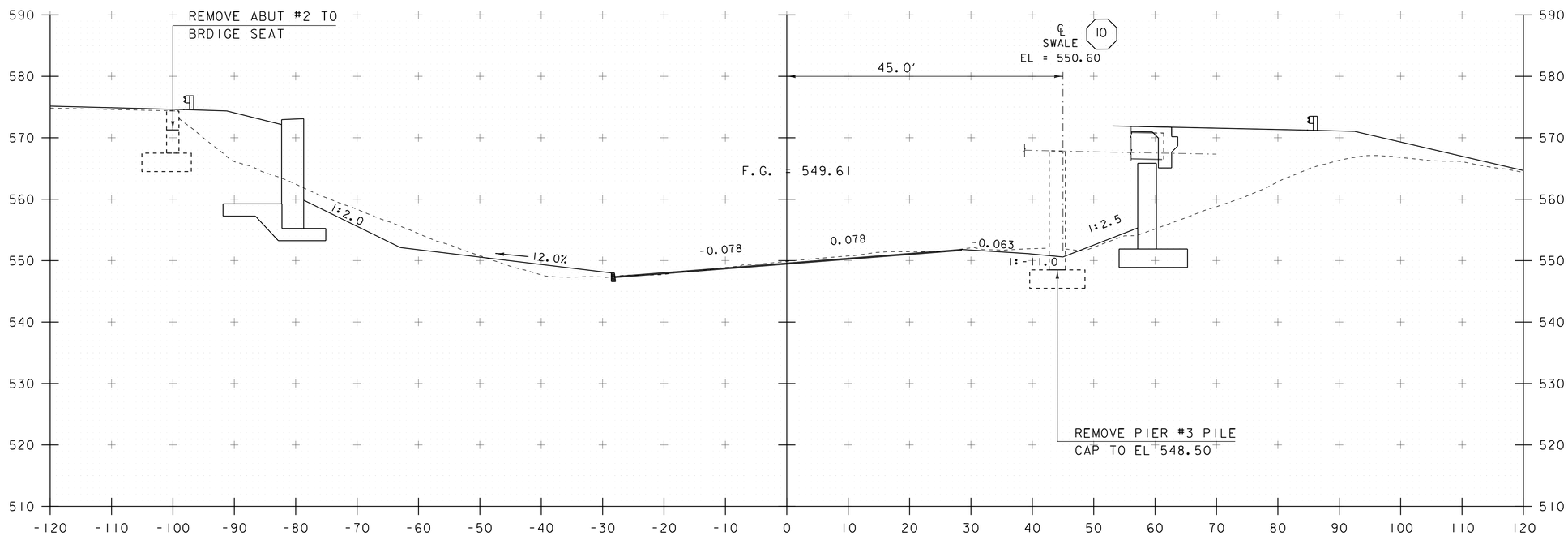

353+25

STA. 353+25 TO STA. 353+25

PROJECT NAME: HARTFORD	
PROJECT NUMBER: IM 091-2(79)	
FILE NAME: s12a132xsec.dgn	PLOT DATE: 15-DEC-2014
PROJECT LEADER: K. HIGGINS	DRAWN BY: K. FRIEDLAND
DESIGNED BY: G. LAROCHE	CHECKED BY: W. LAMMER
US 5 CROSS SECTIONS	SHEET 159 OF 166

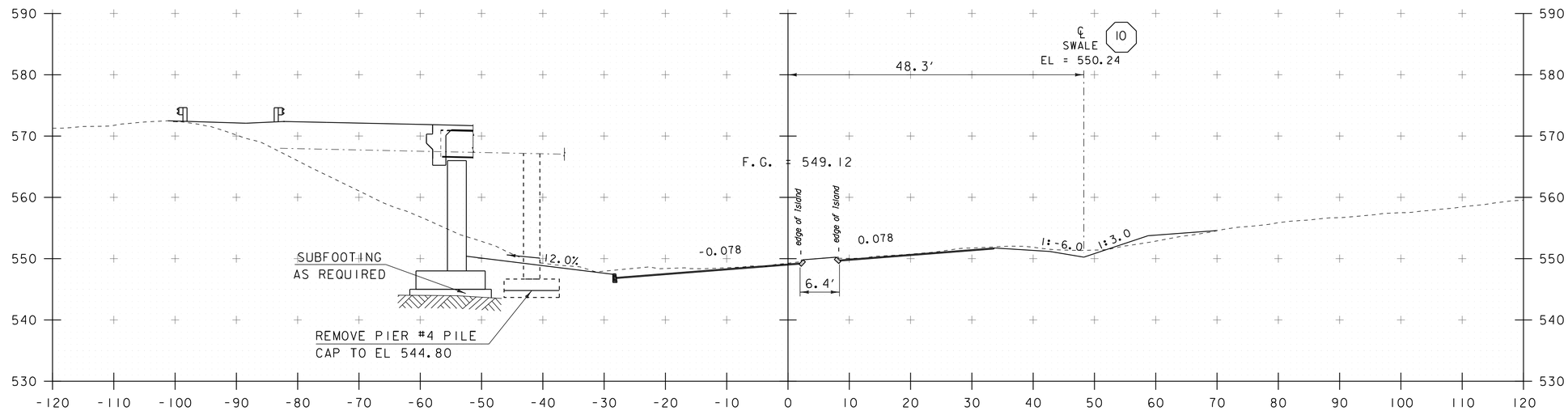

353+75

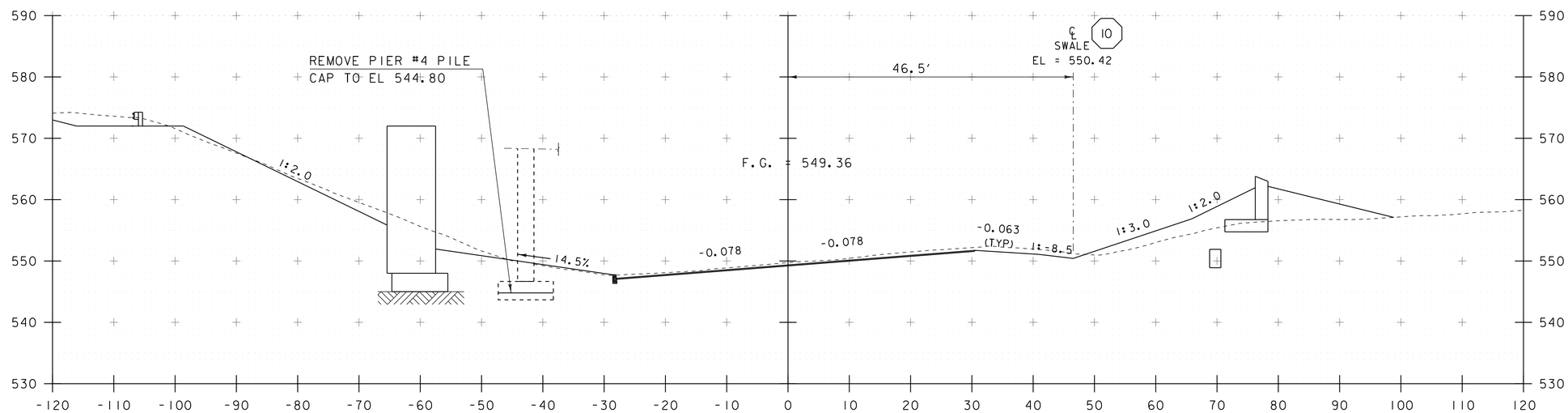

353+50

PROJECT NAME: HARTFORD	
PROJECT NUMBER: IM 091-2(79)	
FILE NAME: s12a132xsec.dgn	PLOT DATE: 15-DEC-2014
PROJECT LEADER: K. HIGGINS	DRAWN BY: K. FRIEDLAND
DESIGNED BY: G. LAROCHE	CHECKED BY: W. LAMMER
US 5 CROSS SECTIONS	SHEET 160 OF 166

STA. 353+50 TO STA. 353+75

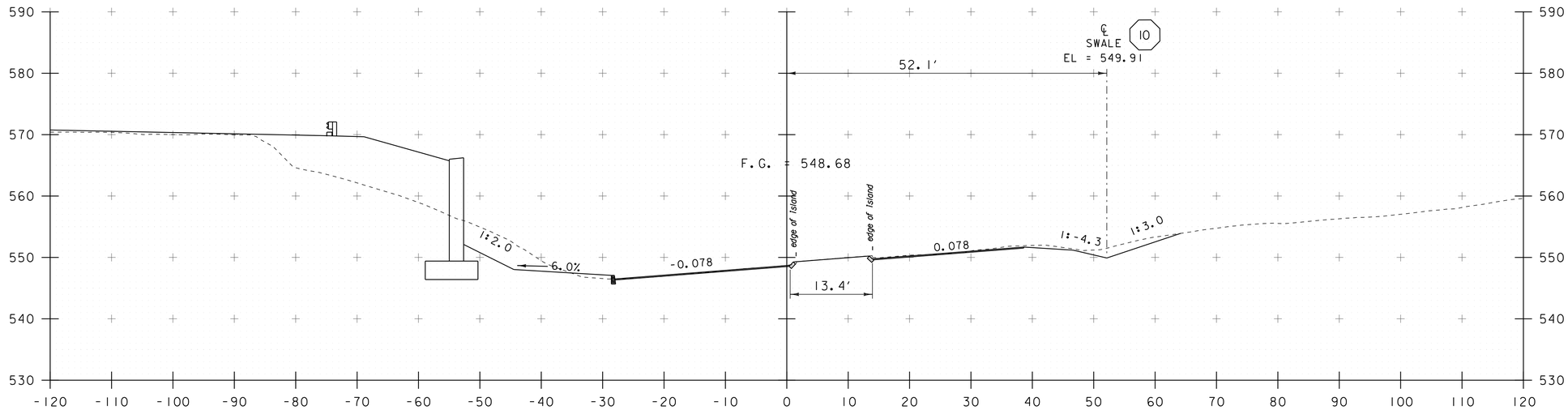

354+25

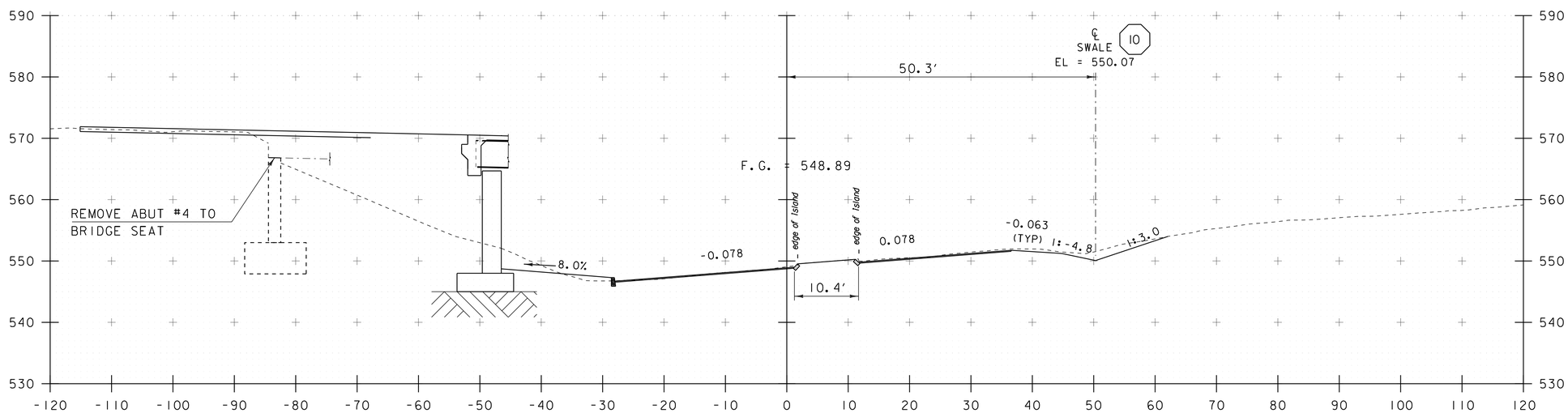

354+00

PROJECT NAME: HARTFORD	
PROJECT NUMBER: IM 091-2(79)	
FILE NAME: s12a132xsec.dgn	PLOT DATE: 15-DEC-2014
PROJECT LEADER: K. HIGGINS	DRAWN BY: K. FRIEDLAND
DESIGNED BY: G. LAROCHE	CHECKED BY: W. LAMMER
US 5 CROSS SECTIONS	SHEET 161 OF 166

STA. 354+00 TO STA. 354+25

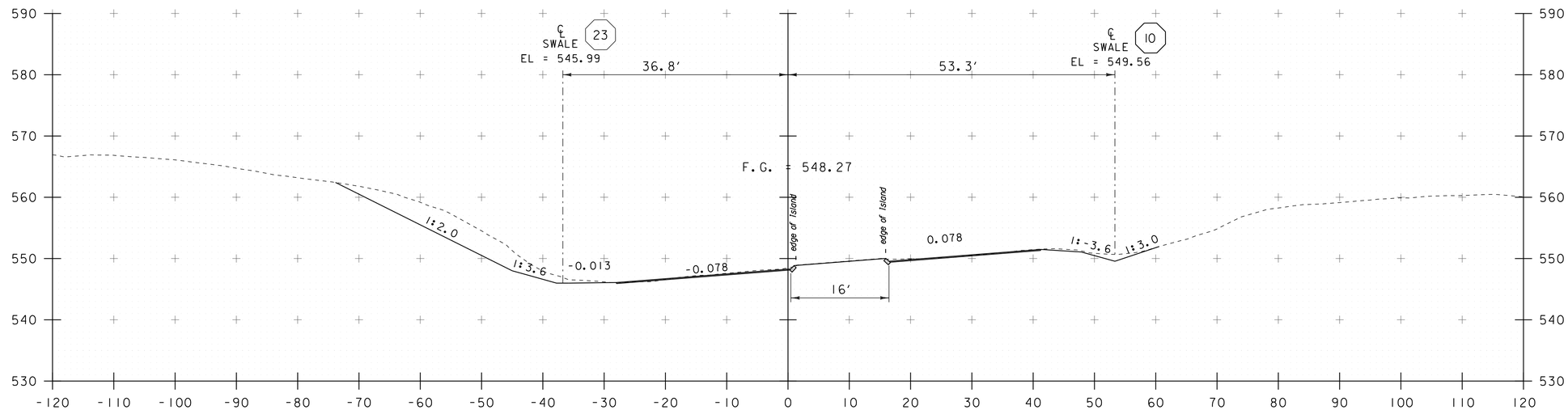

354+75

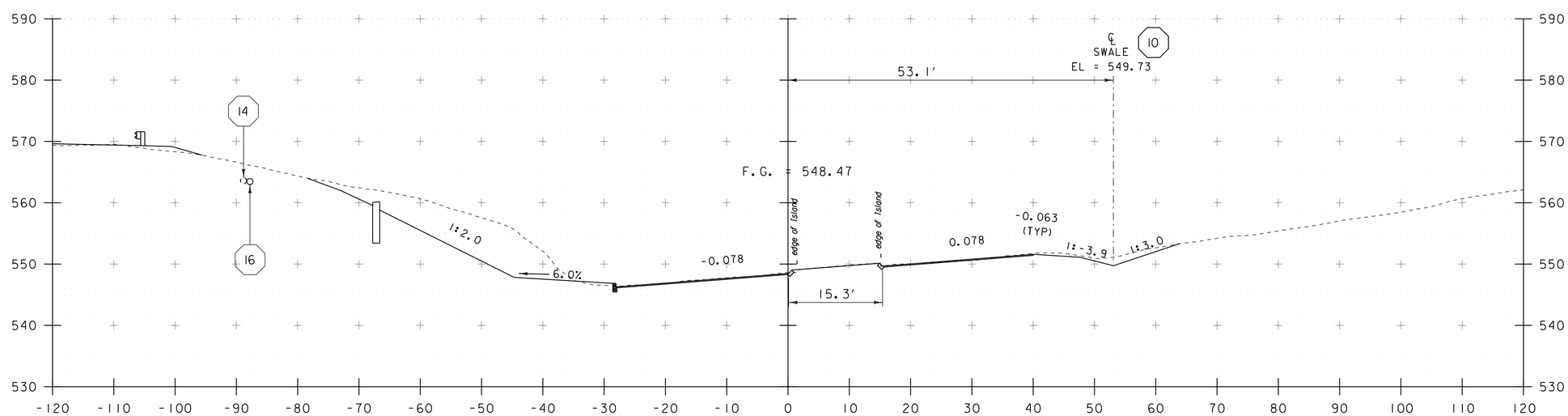

354+50

PROJECT NAME: HARTFORD	
PROJECT NUMBER: IM 091-2(79)	
FILE NAME: sl2al32xsec.dgn	PLOT DATE: 15-DEC-2014
PROJECT LEADER: K. HIGGINS	DRAWN BY: K. FRIEDLAND
DESIGNED BY: G. LAROCHE	CHECKED BY: W. LAMMER
US 5 CROSS SECTIONS	SHEET 162 OF 166

STA. 354+50 TO STA. 354+75

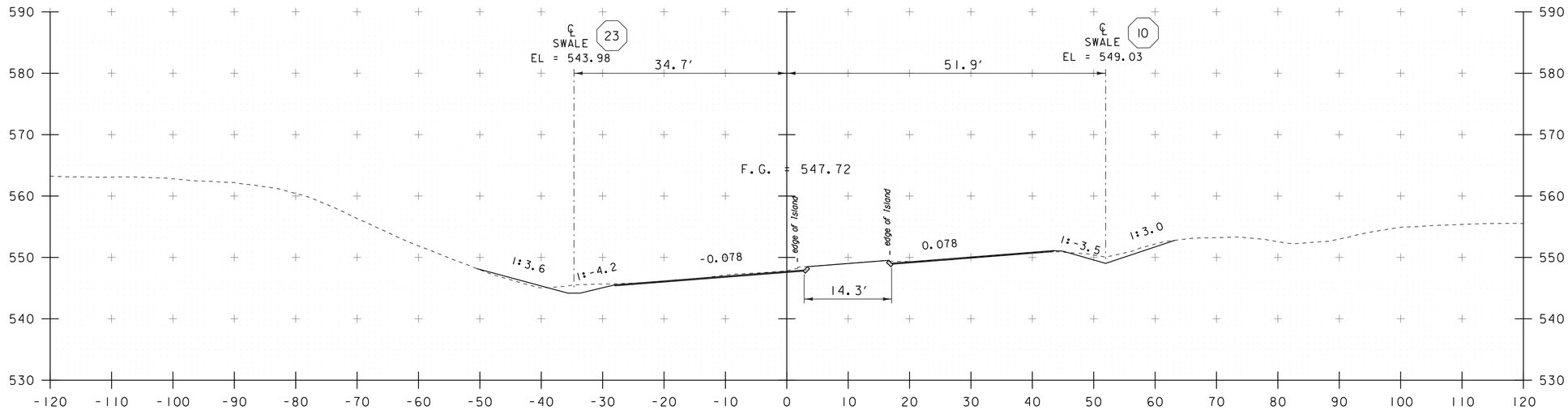

355+50

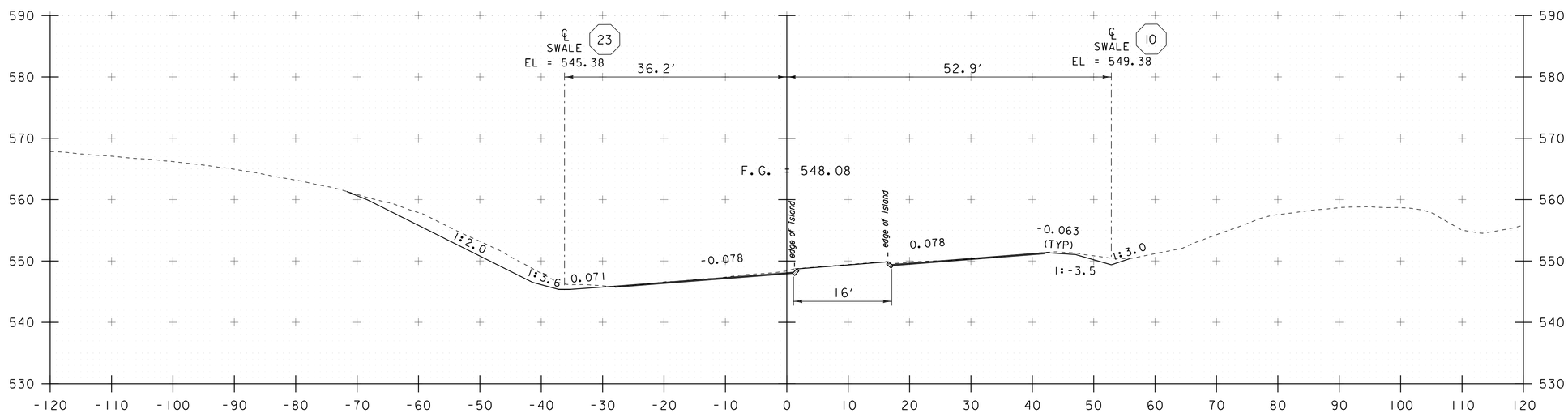

355+00

STA. 355+00 TO STA. 355+50

PROJECT NAME: HARTFORD	
PROJECT NUMBER: IM 091-2(79)	
FILE NAME: s12a132xsec.dgn	PLOT DATE: 15-DEC-2014
PROJECT LEADER: K. HIGGINS	DRAWN BY: K. FRIEDLAND
DESIGNED BY: G. LAROCHE	CHECKED BY: W. LAMMER
US 5 CROSS SECTIONS	SHEET 163 OF 166

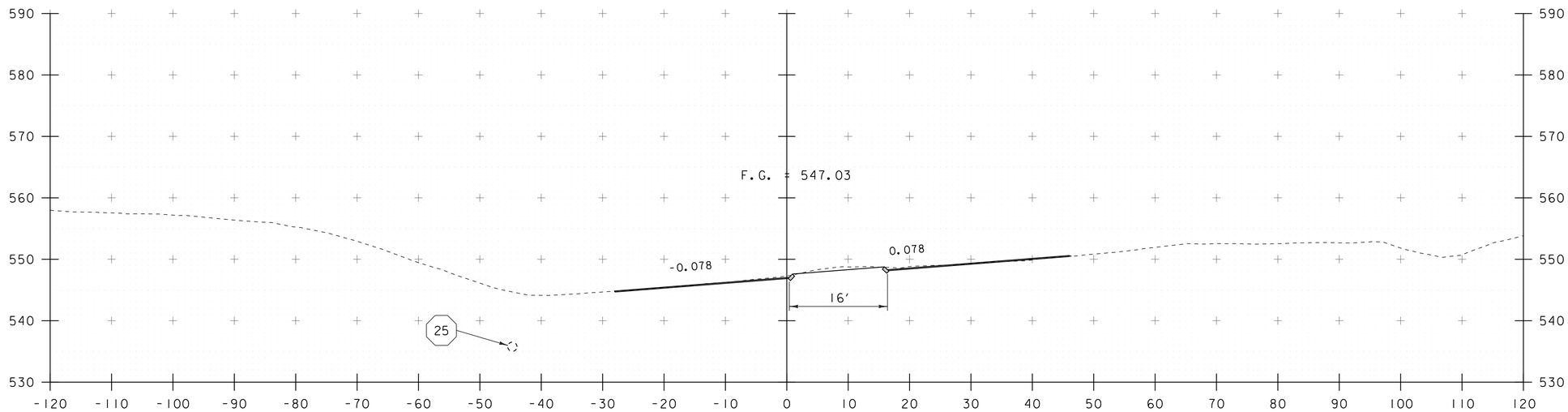

356+50

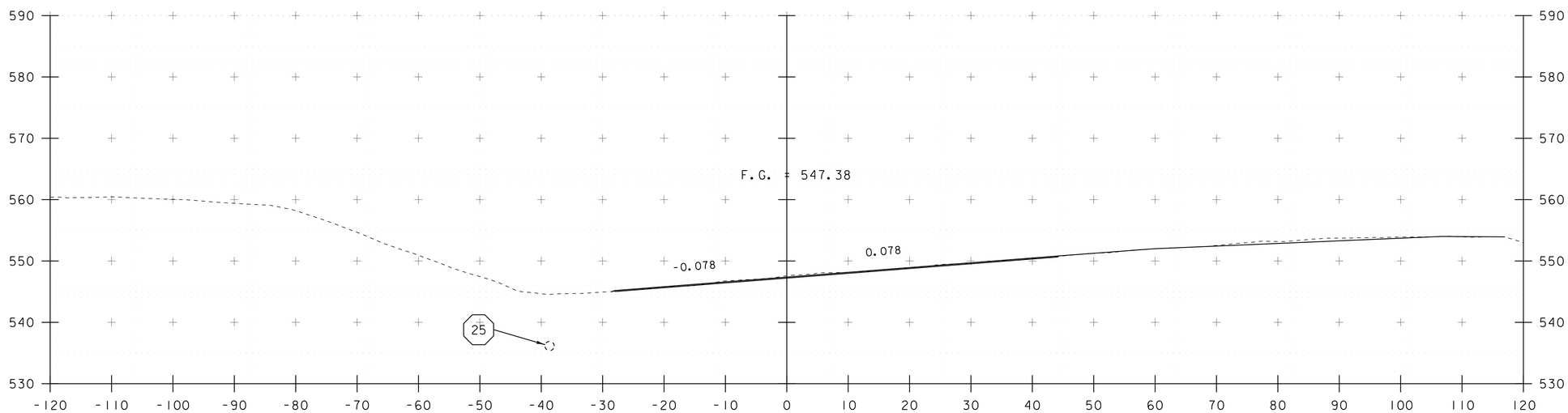

356+00

PROJECT NAME: HARTFORD	
PROJECT NUMBER: IM 091-2(79)	
FILE NAME: s12a132xsec.dgn	PLOT DATE: 15-DEC-2014
PROJECT LEADER: K. HIGGINS	DRAWN BY: K. FRIEDLAND
DESIGNED BY: G. LAROCHE	CHECKED BY: W. LAMMER
US 5 CROSS SECTIONS	SHEET 164 OF 166

STA. 356+00 TO STA. 356+50

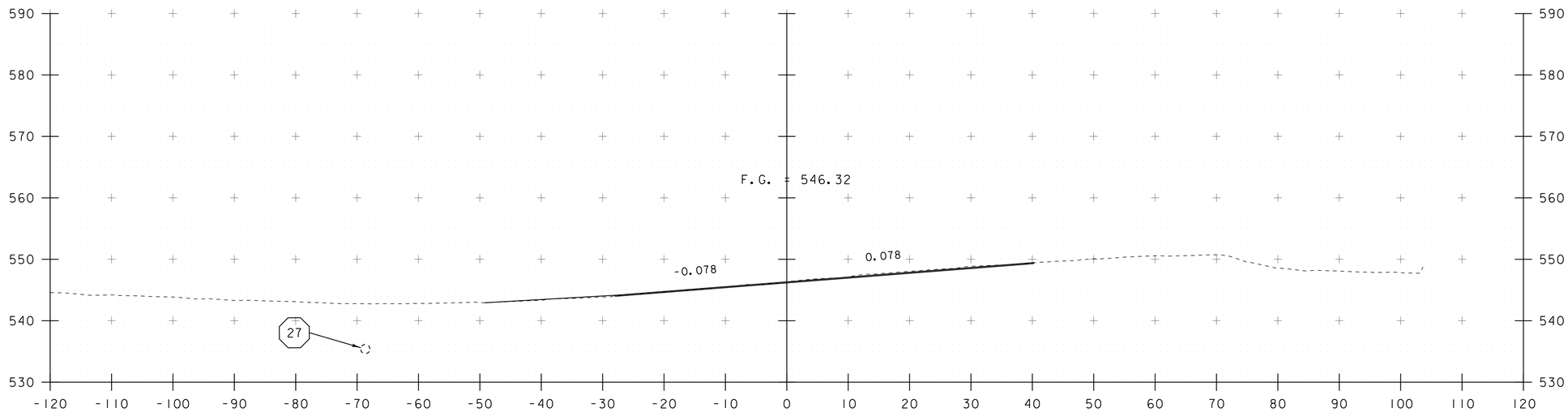

357+50

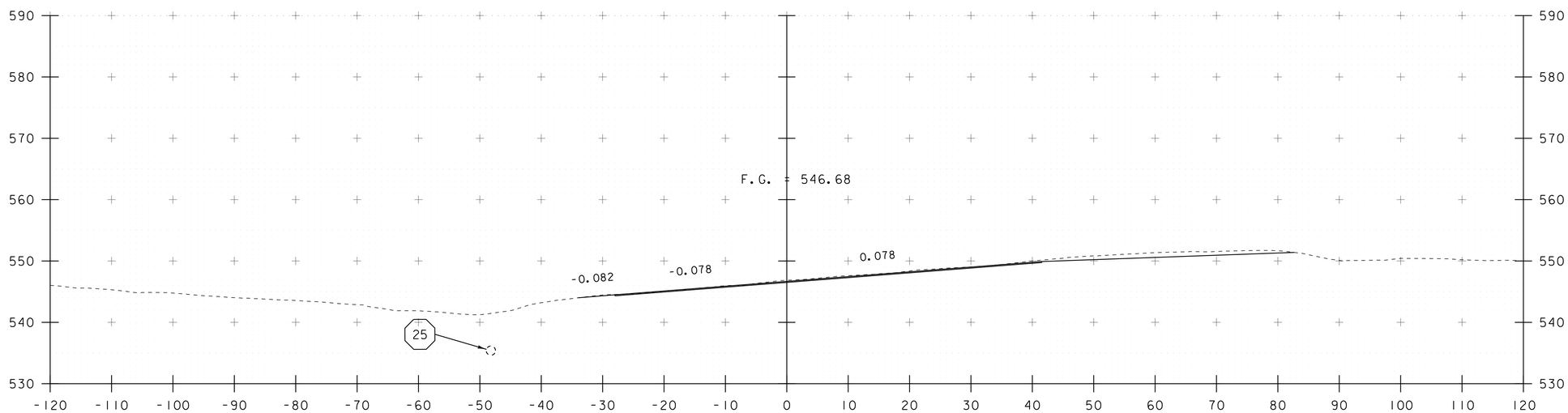

357+00

PROJECT NAME: HARTFORD	
PROJECT NUMBER: IM 091-2(79)	
FILE NAME: s12a132xsec.dgn	PLOT DATE: 15-DEC-2014
PROJECT LEADER: K. HIGGINS	DRAWN BY: K. FRIEDLAND
DESIGNED BY: G. LAROCHE	CHECKED BY: W. LAMMER
US 5 CROSS SECTIONS	SHEET 165 OF 166

STA. 357+00 TO STA. 357+50

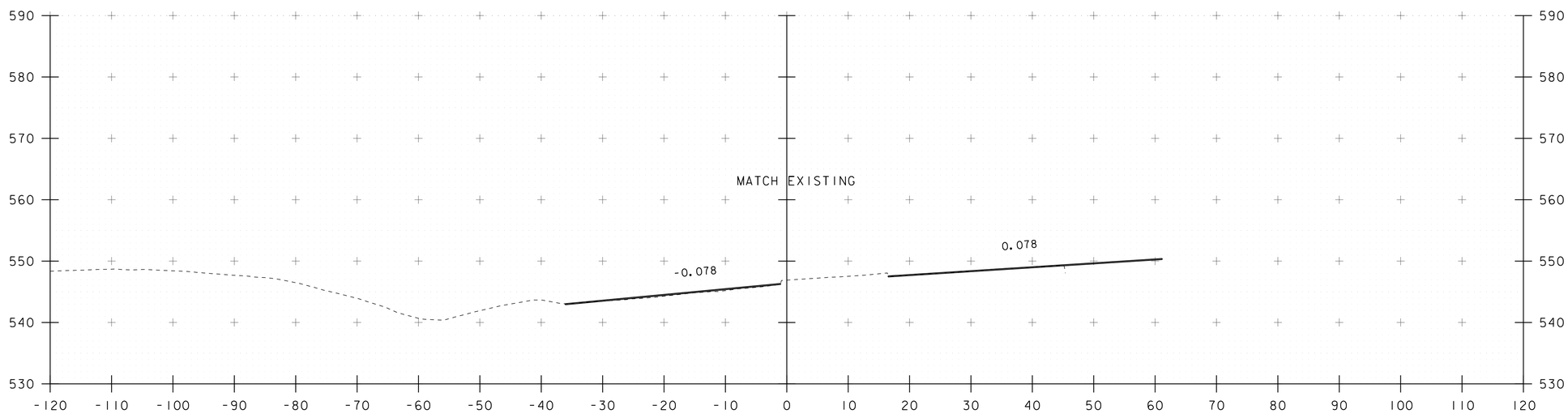

358+00

STA. 358+00 TO STA. 358+00

PROJECT NAME: HARTFORD	
PROJECT NUMBER: IM 091-2(79)	
FILE NAME: s12a132xsec.dgn	PLOT DATE: 15-DEC-2014
PROJECT LEADER: K. HIGGINS	DRAWN BY: K. FRIEDLAND
DESIGNED BY: G. LAROCHE	CHECKED BY: W. LAMMER
US 5 CROSS SECTIONS	SHEET 166 OF 166

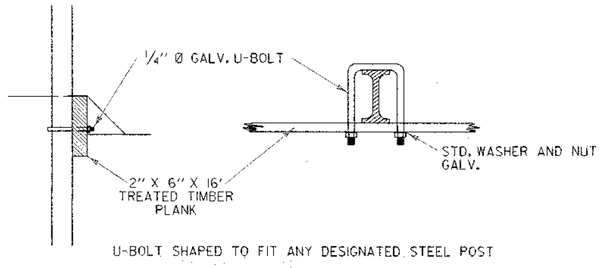

WITH STEEL POSTS

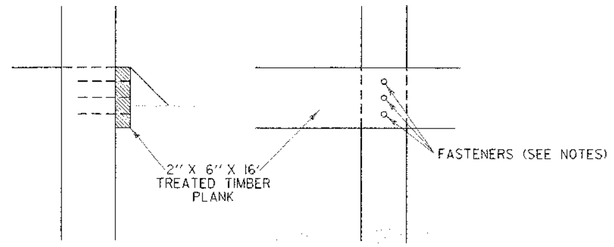

WITH WOOD POSTS (EXISTING CONDITION)

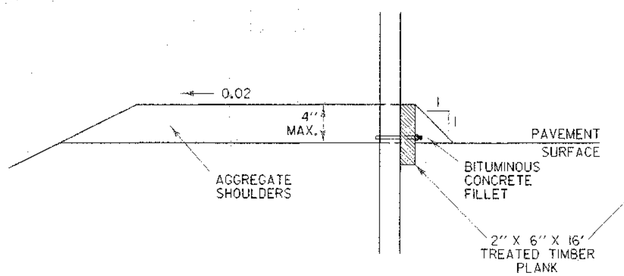

BITUMINOUS CONCRETE FILLET DETAIL

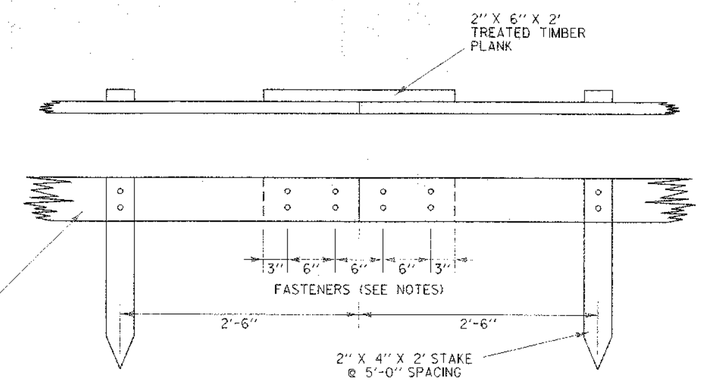

SPLICE DETAIL

TREATED TIMBER CURB

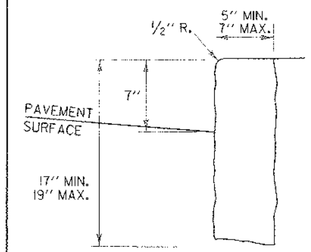

VERTICAL GRANITE CURB

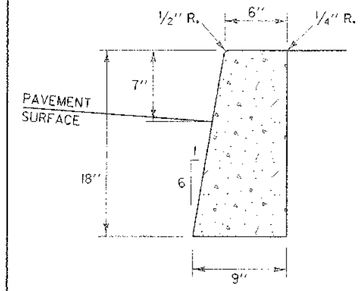

CAST IN PLACE CONCRETE CURB, TYPE B

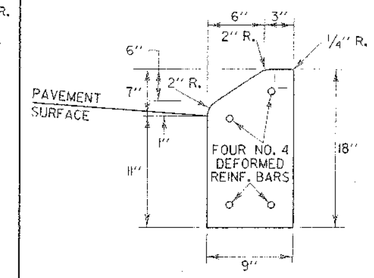

PRECAST REINFORCED CONCRETE CURB, TYPE A

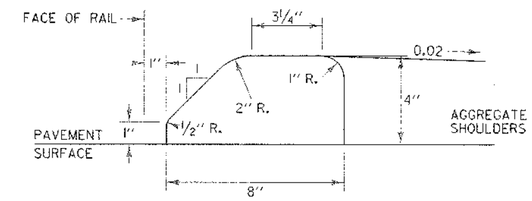

USE ONLY WITH STEEL BEAM GUARDRAIL

BITUMINOUS CONCRETE CURB, TYPE A

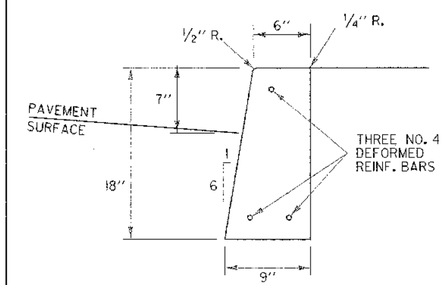

PRECAST REINFORCED CONCRETE CURB, TYPE B

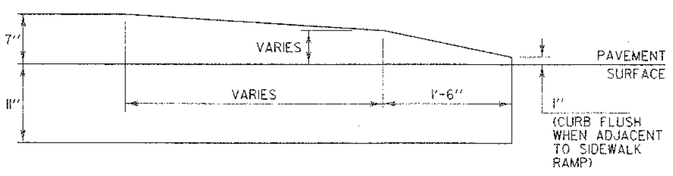

CONCRETE CURB END

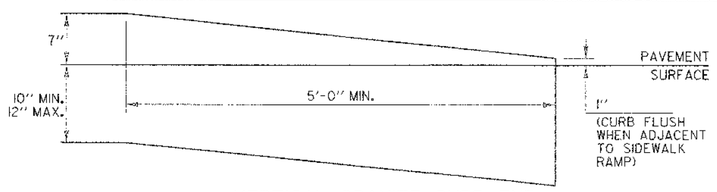

VERTICAL GRANITE CURB END

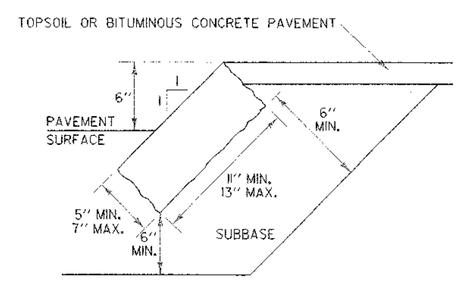

EDGING TO BE PLACED PRIOR TO PLACING TOP SURFACE COURSE.

GRANITE SLOPE EDGING

GENERAL NOTES:

1. HEIGHT OF REVEAL OF CURB SHALL NOT EXCEED FOUR INCHES WHERE DESIGN OR POSTED SPEED IS EQUAL TO OR GREATER THAN 40 MPH AND WHEN INSTALLED WITH GUARDRAIL (STANDARD SHAPE TO BE BURIED TO THIS DEPTH).
2. WHEN CONCRETE SIDEWALK IS CONSTRUCTED ADJACENT TO CONCRETE OR VERTICAL GRANITE CURB, ASPHALT TREATED FELT SHALL BE PLACED BETWEEN THE SIDEWALK AND CURB FOR THE TOTAL DEPTH OF THE SIDEWALK.
3. FASTENERS (20d NAILS OR SCREWS) SHALL BE CORROSION RESISTANT TO THE TREATED LUMBER.
4. FOR SPECIFICATIONS FOR EXPANSION/CONTRACTION JOINTS AND LENGTHS OF SECTIONS, SEE SECTION 616.
5. JOINTS BETWEEN CURB SECTIONS SHALL BE MORTARED IN CONFORMANCE WITH SECTION 616.
6. BITUMINOUS CONCRETE AND TREATED TIMBER CURB SHALL BE IN CONFORMANCE WITH SECTION 616.
7. TWO INCH MINIMUM CLEARANCE FROM FACE OF CONCRETE TO EDGE OF REINFORCING STEEL.

OTHER STDS. REQUIRED: **NONE**

REVISIONS AND CORRECTIONS

FEB. 11, 2008 - ORIGINAL APPROVAL DATE

APPROVED

Kevin S. Marchie
ROADWAY, TRAFFIC & SAFETY ENGINEER

Richard Fetterman
DIRECTOR OF PROGRAM DEVELOPMENT

Mark D. Richter
FEDERAL HIGHWAY ADMINISTRATION

CURBING

VERMONT AGENCY OF TRANSPORTATION

STANDARD

C-10

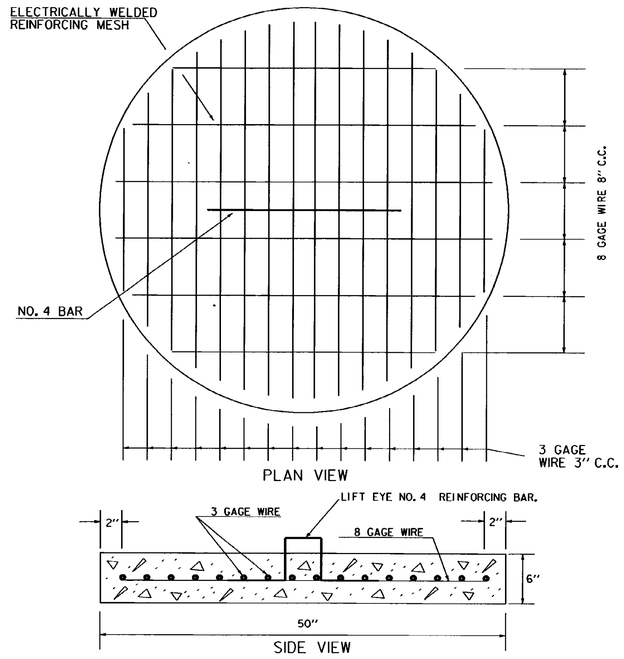

PRECAST REINFORCED CONCRETE BASE

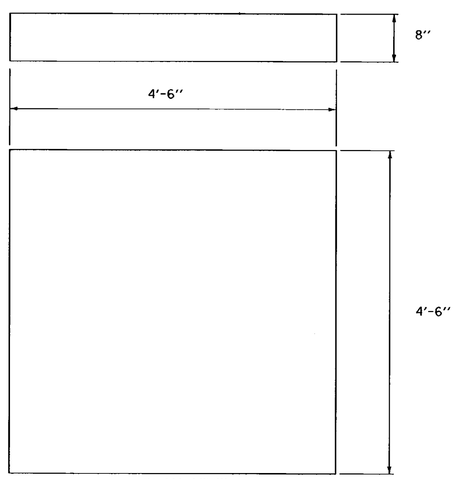

DROP INLET PIPE BASE CAST IN PLACE
(CONCRETE CONFORMING TO STRUCTURAL CONCRETE CLASS B)

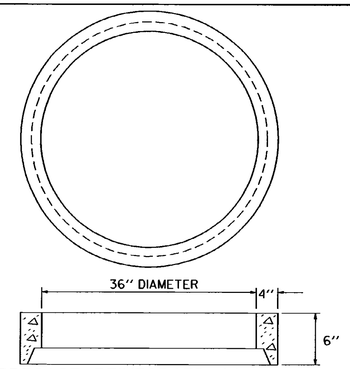

PRECAST REINFORCED CONCRETE PIPE RISER

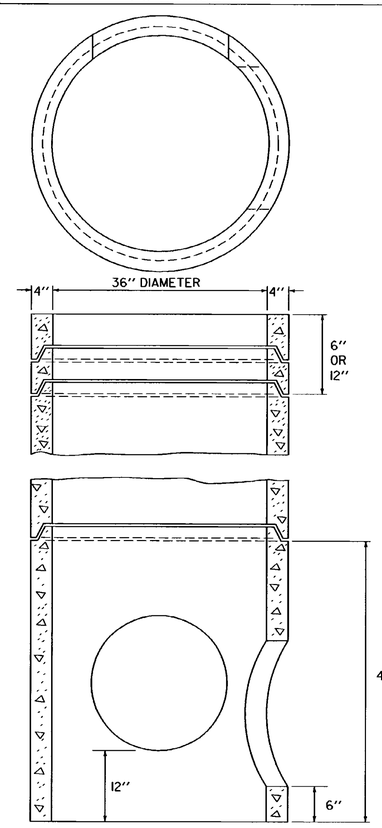

PIPE SECTIONS FOR DROP INLETS

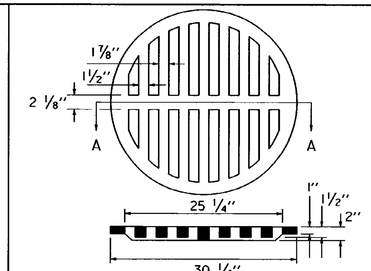

SECTION A-A
CAST IRON GRATE

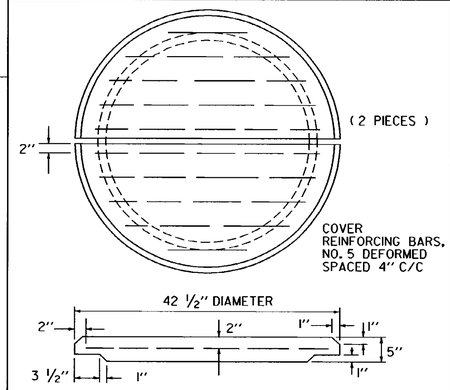

PRECAST REINFORCED CONCRETE COVER

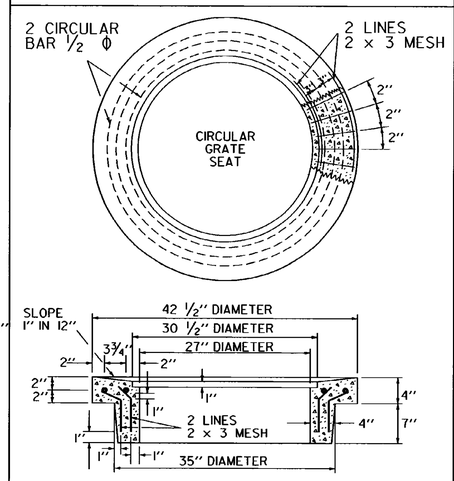

PRECAST REINFORCED CONCRETE RING FOR GRATE

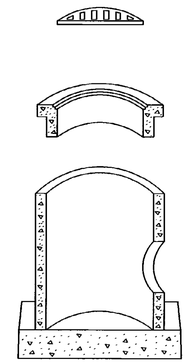

PRECAST REINFORCED CONCRETE PIPE DROP INLET WITH CAST IRON GRATE

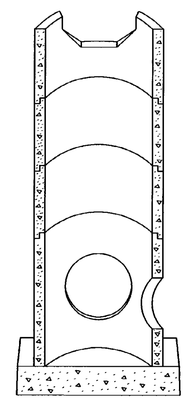

PRECAST REINFORCED CONCRETE PIPE DROP INLET WITH THROATED RISER

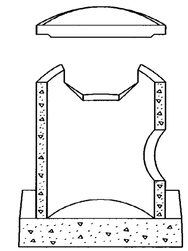

PRECAST REINFORCED CONCRETE PIPE DROP INLET WITH CONCRETE COVER

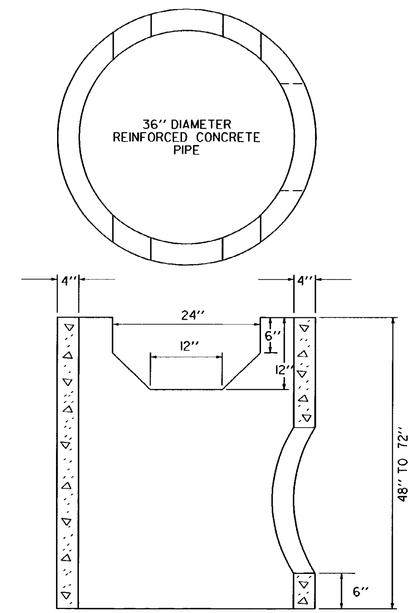

PRECAST REINFORCED CONCRETE PIPE DROP INLET WITH THROAT

NOTE :
THESE DROP INLETS SHOULD NOT BE USED IN AREAS OF VEHICULAR TRAFFIC OR IN BENCHES ON CUT SLOPES

REVISIONS AND CORRECTIONS

DEC. 6, 1971 - ORIGINAL APPROVAL DATE
JUNE 1, 1994 - REISSUED, WITHOUT CHANGE, UNDER NEW SIGNATURES.

APPROVED

APPROVED FOR THIS PROJECT AND/OR DESIGN IMPLEMENTATION. FHWA FINAL APPROVAL PENDING.

Gordon S. MacCallum, P.E.
DIRECTOR OF ENGINEERING

Robert M. Murphy, P.E.
DESIGN ENGINEER

PRECAST REINFORCED CONCRETE PIPE DROP INLET WITH CAST IRON GRATE

PRECAST REINFORCED CONCRETE PIPE DROP INLET WITH CONCRETE COVER

VERMONT AGENCY OF TRANSPORTATION

STANDARD
D-1

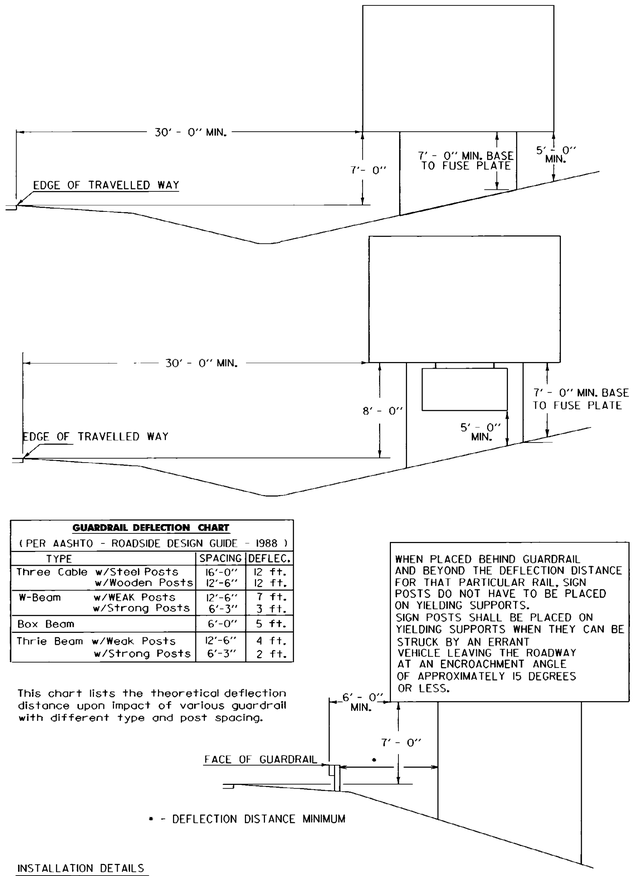

GUARDRAIL DEFLECTION CHART (PER AASHTO - ROADSIDE DESIGN GUIDE - 1988)		
TYPE	SPACING	DEFLEC.
Three Cable w/Steel Posts	16'-0"	12 ft.
w/Wooden Posts	12'-6"	12 ft.
W-Beam w/WEAK Posts	12'-6"	7 ft.
w/Strong Posts	6'-3"	3 ft.
Box Beam	6'-0"	5 ft.
Thrie Beam w/Weak Posts	12'-6"	4 ft.
w/Strong Posts	6'-3"	2 ft.

This chart lists the theoretical deflection distance upon impact of various guardrail with different type and post spacing.

WHEN PLACED BEHIND GUARDRAIL AND BEYOND THE DEFLECTION DISTANCE FOR THAT PARTICULAR RAIL, SIGN POSTS DO NOT HAVE TO BE PLACED ON YIELDING SUPPORTS. SIGN POSTS SHALL BE PLACED ON YIELDING SUPPORTS WHEN THEY CAN BE STRUCK BY AN ERRANT VEHICLE LEAVING THE ROADWAY AT AN ENCROACHMENT ANGLE OF APPROXIMATELY 15 DEGREES OR LESS.

• - DEFLECTION DISTANCE MINIMUM

INSTALLATION DETAILS

NORMALLY SIGNS SHOULD BE MOUNTED AT 93° TO THE DIRECTION OF TRAFFIC. ON CURVED ALIGNMENT THE ANGLE OF PLACEMENT SHOULD BE DETERMINED BY THE PATH OF APPROACHING TRAFFIC RATHER THAN BY THE ROADSIDE EDGE AT THE POINT WHERE THE SIGN IS LOCATED.
WHEN INSTALLING OVERHEAD SIGNS, CANT THE SIGN FROM THE TOP TOWARD APPROACHING TRAFFIC AT A THREE DEGREE TILT ANGLE.

GUIDE SIGNS

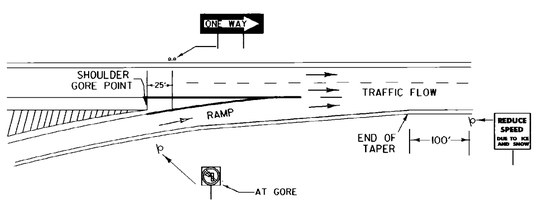

SIGN PLACEMENT AT END OF RAMP

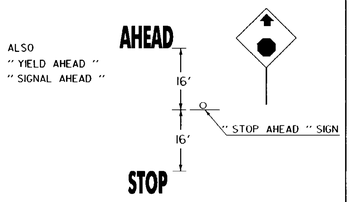

ALSO
" YIELD AHEAD "
" SIGNAL AHEAD "

WORD MARKING LAYOUT DETAIL

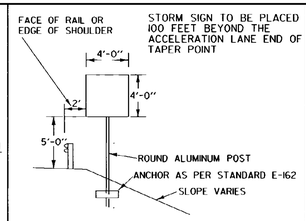

STORM SIGN

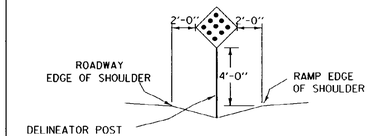

HAZARD MARKER

MATERIALS:
THE SIGN BASE MATERIAL USED FOR THIS SIGN MAY BE EITHER HIGH DENSITY 5/8" PLYWOOD OR 0.100" FLAT SHEET ALUMINUM.

COLORS:
THIS SIGN SHALL HAVE A REFLECTORIZED YELLOW BACKGROUND WITH BLACK PAINTED OR LETTERING FILM STRIPES.

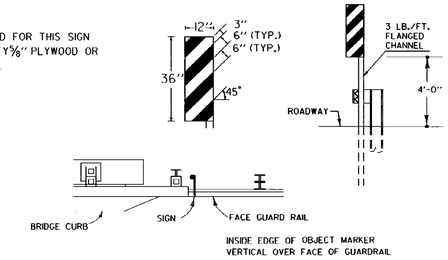

OBJECT MARKER

(TO BE USED WHEN FULL WIDTH SHOULDERS ARE NOT CARRIED ACROSS THE BRIDGE)

MARKERS MOUNTED ON THE LEFT SIDE SHALL HAVE THE DIAGONAL STRIPES SLOPING TOWARD CENTERLINE

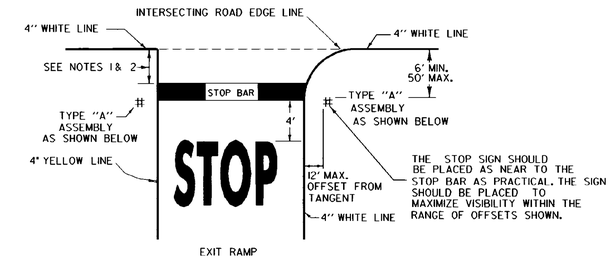

EXIT RAMP
SHOWN FOR ILLUSTRATION PURPOSES

NOTES:

1. THE STOP BAR SHOULD BE PLACED AT THE DESIRED STOPPING POINT. IN NO CASE MORE THAN 30' OR LESS THAN 4' FROM THE NEAREST EDGE OF THE INTERSECTING ROADWAY.
2. AT A SIGNALIZED INTERSECTION, DELETE WORDING " STOP " AND THE STOP SIGN AND PLACE STOP BAR A MINIMUM OF 40' FROM THE NEAREST SIGNAL HEAD FOR THE APPROACH.
3. EXCLUDE THE STOP BAR FOR A YIELD CONDITION.

PAVEMENT MARKING & STOP SIGN LOCATION DETAILS
FOR OFF RAMP

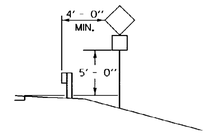

SIGN WITH SUPPLEMENTAL PLAQUE

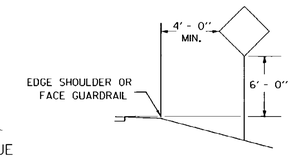

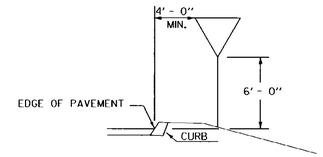

STANDARD SIGN PLACEMENT
RAMP

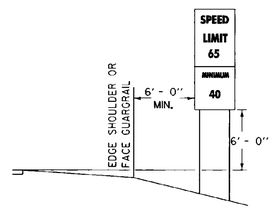

REGULATORY SIGN

SPEED LIMIT SIGN TO BE PLACED 1600 FEET BEYOND THE END OF THE ACCELERATION LANE TAPER POINT.

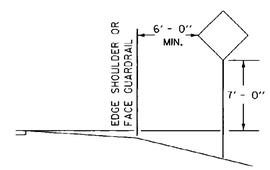

WARNING SIGN

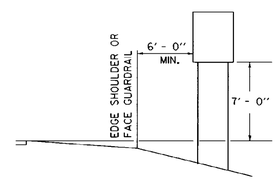

REGULATORY SIGN

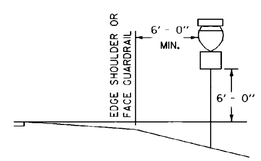

ROUTE MARKER

ROUTE REASSURANCE MARKER TO BE PLACED 600' BEYOND THE END OF THE ACCELERATION LANE TAPER POINT

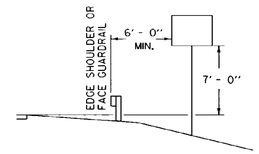

GUIDE SIGN

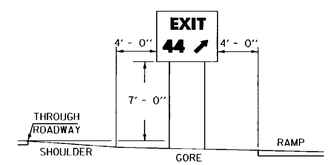

GORE SIGN

STANDARD SIGN PLACEMENT
MAINLINE

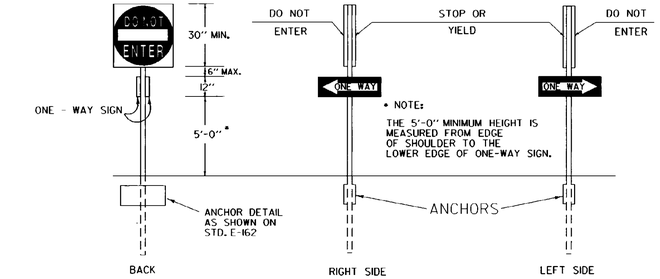

MOUNT ON - 3 LBS/FT FLANGED CHANNEL
(SEE BRACKET DETAIL AS SHOWN ON STD. E-160)

REGULATORY SIGN ASSEMBLY DETAIL
FOR OFF RAMP

OTHER STDS. REQUIRED: E-160 E-161 E-162 E-163

REVISIONS AND CORRECTIONS

APR. 01, 1988 - DATE OF ORIGINAL ISSUE
JUNE 21, 1989 - FHWA - CHANGE TO 7' FUSE PLATE CLEARANCE
AUG. 08, 1995 - DELETED TWO RAIL ALUMINUM FROM DEFLECTION CHART AND MINOR NOTE REVISIONS

APPROVED FOR THIS PROJECT AND/OR DESIGN IMPLEMENTATION. FHWA FINAL APPROVAL PENDING.

APPROVED

Gordon B. MacCallum
DIRECTOR OF ENGINEERING

David A. Ross
TRAFFIC AND SAFETY ENGINEER

STANDARD SIGN PLACEMEMT EXPRESSWAY AND FREEWAY

/traf/std/stdel20.dgn : stdel20.i

VERMONT AGENCY OF TRANSPORTATION

STANDARD
E-120

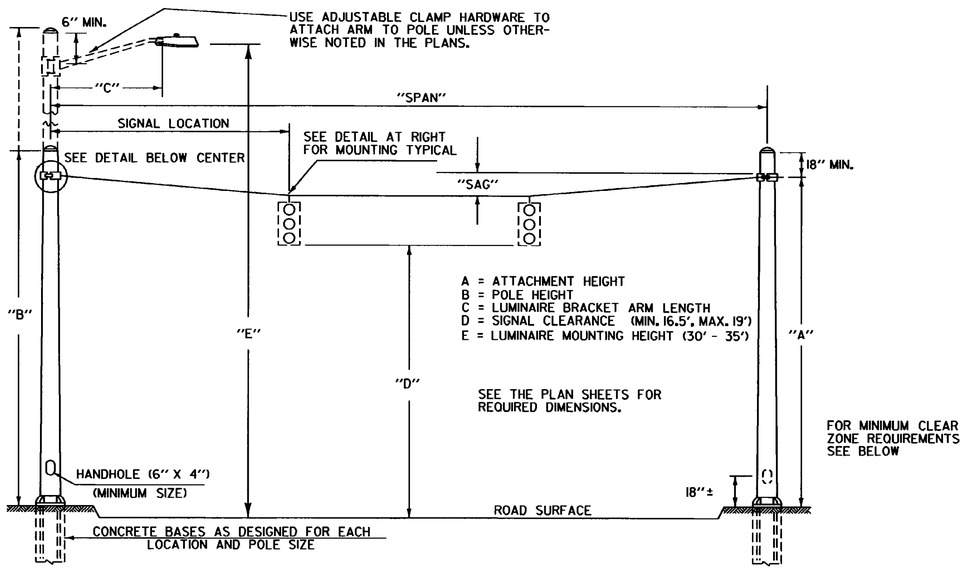

SPAN WIRE MOUNTED TRAFFIC SIGNALS WITH LUMINAIRES

NOTES

1) ALL TRAFFIC SIGNAL EQUIPMENT SHALL MEET OR EXCEED ALL REQUIREMENTS OF THE LATEST REVISION OF THE NATIONAL ELECTRICAL MANUFACTURERS ASSOC. (NEMA) AND THE INTERNATIONAL MUNICIPAL SIGNAL ASSOC. (IMSA) STANDARDS FOR TRAFFIC CONTROL SYSTEMS.

2) ALL ELECTRICAL WIRE AND CABLE SHALL BE COPPER. ELECTRICAL SIGNAL CABLE FROM TRAFFIC SIGNAL CONTROLLER TO SIGNAL HEADS SHALL BE COMPOSED OF AWG # 12 (MIN) STRANDED CONDUCTORS, AND SHALL MEET IMSA WIRE AND CABLE SPECIFICATIONS.

3) ALL SIGNAL HEAD CABLES SHALL BE CONTINUOUS FROM THE CONTROLLER TO THE NEAREST SIGNAL HEAD TO WHICH THEY APPLY. THE CABLE SHALL ALSO BE CONTINUOUS FROM THE FIRST SIGNAL HEAD TO ANY ADDITIONAL HEADS WITH TERMINATION IN THE DISCONNECT HANGER.

4) THE PEDESTRIAN SIGNAL HEADS SHALL HAVE AUDIO SIGNALS TO INDICATE ALLOWABLE PEDESTRIAN MOVEMENT FOR THE VISUALLY IMPAIRED DURING THE PEDESTRIAN PHASE. THEY SHALL BE OF THE TYPE NORMALLY USED FOR SUCH AN INSTALLATION AND BE WIRED IN SUCH A WAY AS TO BE EASILY DEACTIVATED. AFTER THE AUDIO SIGNAL HAS BEEN INSTALLED AND FIELD TESTED IT SHALL BE DEACTIVATED, UNLESS AN EXCLUSIVE PEDESTRIAN PHASE IS OPERATING AT THE INTERSECTION. PEDESTRIAN PUSH BUTTONS SHALL BE INSTALLED AT EACH END OF EACH CROSSWALK WHERE ACTUATED PEDESTRIAN SIGNALS ARE INSTALLED OR AS SHOWN ON THE PLANS.

5) THE PEDESTRIAN HEADS SHALL HAVE TEXT ''WALK'', ''DONT WALK'', UNLESS OTHERWISE NOTED. THEY SHALL MEET THE LATEST REQUIREMENTS OF THE MANUAL ON UNIFORM TRAFFIC CONTROL DEVICES (MUTCD).

6) WHEN STREET LIGHTS ARE INSTALLED ON A TRAFFIC SIGNAL STRAIN POLE, AND THE STREET LIGHTING ITEM IS NOT PART OF THE CONTRACT, THE LUMINAIRES AND BRACKET ARMS ARE INCLUDED UNDER THE TRAFFIC CONTROL SIGNAL ITEM. THEY SHALL MEET ALL OF THE REQUIREMENTS OF SECTION 679 OF THE CURRENT VERMONT STANDARD SPECIFICATIONS FOR CONSTRUCTION.

7) SIGNAL TIMING IS APPROXIMATE AND IS NOT TO BE CONSIDERED FINAL. ALL NECESSARY HARDWARE TO CHANGE THE TIMING SHALL BE ON HAND WHEN THE SIGNALS ARE ACTIVATED. THE RESIDENT ENGINEER SHALL PERFORM CHECKS DURING THE AM AND PM PEAK PERIODS TO INSURE OPTIMUM SETTINGS. IF REQUIRED, APPROPRIATE TIMING CHANGES SHALL BE MADE TO ''FINE-TUNE'' THE CONTROLLER TO ITS BEST EFFICIENCY PRIOR TO COMPLETION OF THE PROJECT. TIMING CHANGES WILL BE APPROVED BY A REPRESENTATIVE OF THE V.A.O.T. TRAFFIC AND SAFETY DIVISION. TIMING ADJUSTMENTS SHALL BE SUBSIDIARY TO THE TRAFFIC CONTROL SIGNAL ITEM. MINOR TIMING CHANGES MADE TO ''FINE-TUNE'' THE CONTROLLER WILL NOT AFFECT THE RUNNING OF THE 30 DAY TEST PERIOD.

8) THE TRAFFIC SIGNAL STRAIN POLES SHALL BE BACK RAKED BEFORE THE WIRES AND SIGNALS ARE INSTALLED SO THAT THE POLES WILL BE PLUMB WHEN DEAD LOAD DEFLECTION DUE TO SPAN WIRE AND SIGNAL HEADS OCCURS. THE AMOUNT OF BACK RAKE SHALL BE AS SHOWN ON THE PLANS.

9) THE SIGNAL SYSTEM SHALL NOT OPERATE WITHOUT THE APPROPRIATE PAVEMENT MARKINGS AND RELATED SIGNING IN PLACE.

10) THE SIGNAL HEADS SHALL BE COVERED WITH AN OPAQUE COVERING UNTIL SUCH TIME AS THE SIGNAL SYSTEM IS FUNCTIONAL. AT NO TIME SHOULD THE HEADS BE VIEWED WITHOUT HAVING SOME FORM OF SIGNAL INDICATION, I.E. FLASHING OPERATION OR SEQUENCING AS PER PLAN.

11) THE CONFLICT MONITOR SHALL BE CAPABLE OF DETECTING A LACK OF RED, GREEN, YELLOW OR WALK SIGNAL AND SHALL BE CAPABLE OF STORING AT LEAST NINE PREVIOUS FAULTS FOR RECALL VIA A DISPLAY SCREEN.

12) THE VEHICLE DETECTOR AMPLIFIERS AND PHASE MODULES (WHERE APPROPRIATE) INSIDE THE CONTROLLER CABINET SHALL HAVE LABELS TO INDICATE WHICH PHASE AND MOVEMENT GOES WITH EACH. THE LABELS SHALL BE 1/2'' WIDE. THE LOOP DETECTOR LEAD-INS SHALL ALSO BE LABELED AT THE TERMINAL BOARD AS TO WHICH MOVEMENT AND LANE THEY ARE FROM. VEHICLE DETECTOR AMPLIFLIERS SHALL BE OF A TYPE THAT FAIL IN THE ''ON'' POSITION.

13) TEST SWITCHES FOR EACH PHASE SHALL BE PLACED EITHER ON THE CABINET DOOR OR IN A CONVENIENT LOCATION ON THE SIDE WALL.

14) ALL DOOR MOUNTED SWITCHES AND BUTTONS SHALL BE PROTECTED FROM ACCIDENTAL BUMPING OR FROM COMING INTO CONTACT WITH OTHER EQUIPMENT WHEN THE DOOR IS CLOSED.

15) ALL SIGNALS SHALL BE WIRED SUCH THAT NO MORE THAN TWO THROUGH FACES (NORTH-SOUTH AND/OR EAST-WEST) ARE WIRED INTO ONE LOAD SWITCH EVEN THOUGH TWO APPROACHES ARE GREEN DURING THE SAME PHASE.

16) THE CONTRACTOR SHALL PROVIDE A MINIMUM OF TWO COPIES OF THE INSTRUCTION MANUALS FOR THE CONTROLLER, LOOP DETECTORS, CONFLICT MONITORS, AND ANY OTHER EQUIPMENT INCLUDED IN THE CABINET. ONE COPY IS TO BE KEPT IN THE CABINET AND THE OTHER GIVEN TO THE PARTY RESPONSIBLE FOR MAINTENANCE OF THE SIGNAL SYSTEM. ADDITIONAL COPIES TO BE PROVIDED AS CALLED FOR ON THE PLANS.

17) FOR PROGRAMMABLE SOLID STATE CONTROLLERS AND MASTERS, COPIES OF THE FINAL PROGRAM LISTINGS SHALL BE PROVIDED AND DISTRIBUTED AS DETAILED IN NOTE 16.

18) PHASING CHANGES, IF REQUESTED AND FEASIBLE, SHALL BE CONSIDERED AS PART OF THE CONTRACT. EXTRA COMPENSATION FOR THE CHANGES MAY BE AUTHORIZED FOLLOWING APPROVAL OF THE ESTIMATE.

19) TRAFFIC SIGNALS INSTALLED AT NEW LOCATIONS SHALL BE ACTIVATED ONLY UPON THE APPROVAL OF THE ENGINEER AND AFTER FLASHING FOR A MINIMUM OF 48 HRS.

20) IF THE PROJECT INVOLVES REPLACING OR IMPROVING AN EXISTING TRAFFIC SIGNAL, TRAFFIC SHALL BE CONTROLLED BY A UNIFORMED TRAFFIC OFFICER AT ANY TIME THE SIGNAL IS NOT SEQUENCING PER PLAN OR OPERATING ON FLASH. THE SWITCH FROM THE OLD TO THE NEW SIGNAL SHALL BE DONE DURING OFF-PEAK TRAFFIC AND IN SUCH A WAY AS TO MINIMIZE DOWN TIME.

21) TRAFFIC & PEDESTRIAN SIGNALS MOUNTED ON THE SIDE OF THE SIGNAL POLES MAY BE ATTACHED BY METHODS OTHER THAN THOSE SHOWN. SHOP DRAWINGS FOR THE ALTERNATE MOUNTING HARDWARE MUST BY SUBMITTED TO THE TRAFFIC DESIGN SECTION OF THE VAOT VIA THE RESIDENT ENGINEER FOR APPROVAL PRIOR TO CONSTRUCTION.

22) ALL RIGIDLY MOUNTED TRAFFIC AND PEDESTRIAN SIGNAL HEADS (POST TOP, SIDE OR ARM MOUNTED) SHALL BE HEAVY DUTY ALUMINUM, UNLESS OTHERWISE NOTED ON THE PLANS.

23) WHEN (FREE SWINGING) OPTICALLY PROGRAMMABLE SIGNAL HEADS ARE REQUIRED, THEY SHALL NOT BE INSTALLED ON THE SAME HANGER ASSEMBLY AS LIGHTER WEIGHT HEADS, UNLESS OTHERWISE NOTED ON THE PLANS. WHEN TWO HANGER ASSEMBLIES ARE INSTALLED CLOSE TOGETHER, THE BOTTOM OF THE SIGNALS SHALL BE CONNECTED BY A FLAT ARM ASSEMBLY TO PREVENT THE HEADS FROM HITTING EACH OTHER.

24) WHEN MASKING OF OPTICALLY PROGRAMMABLE SIGNAL HEADS IS REQUIRED, THE HEADS SHALL BE RIGIDLY MOUNTED OR TETHERED, AS SHOWN ON STD E-171B.

25) WHEN STREET LIGHTING AND SIGNALS ARE INSTALLED AT THE SAME LOCATION, THE POWER FOR EACH SHALL BE SEPARATED AT THE STANCHION OR SERVICE.

26) WHEN MORE THAN ONE SIGNAL IS POWERED FROM THE SAME SERVICE, EACH SHALL HAVE ITS OWN DISCONNECT AT THE STANCHION.

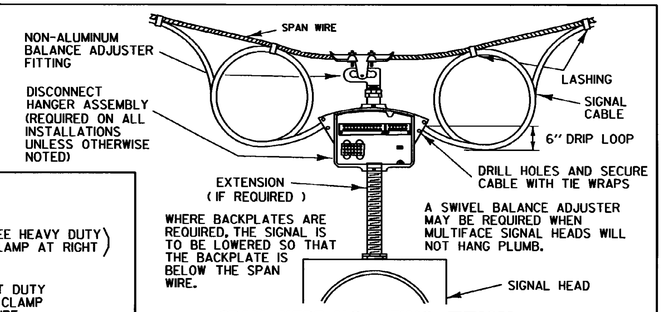

SPAN WIRE MOUNTING TYPICAL

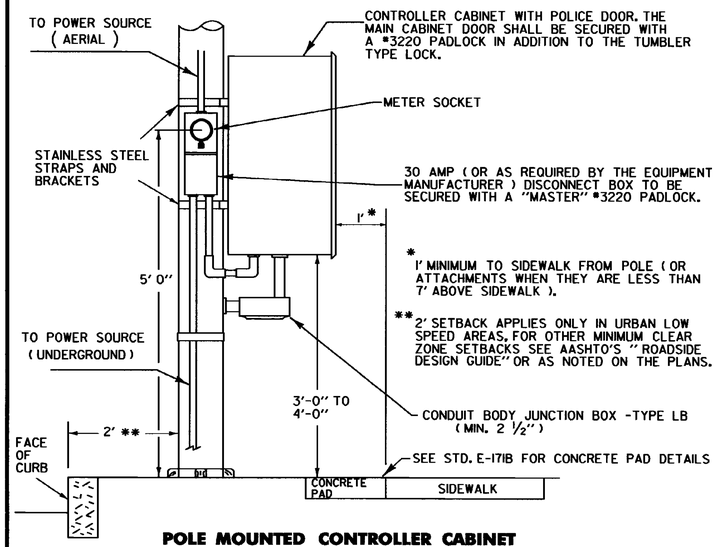

POLE MOUNTED CONTROLLER CABINET INSTALLATION TYPICAL

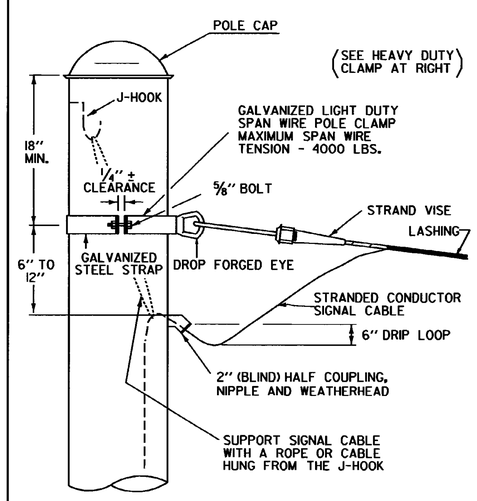

CABLE INSTALLATION TYPICAL WITH SPAN WIRE POLE CLAMP
(LIGHT DUTY GALVANIZED)

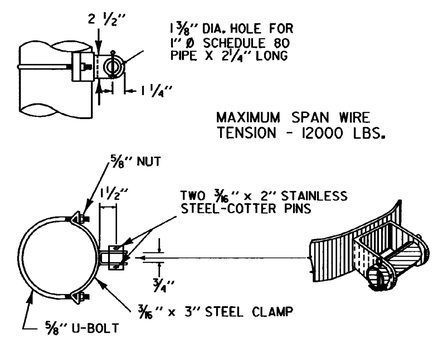

SPAN WIRE CLAMP
(HEAVY DUTY GALVANIZED)

OTHER STDS. REQUIRED E – 171B, E – 175

REVISIONS AND CORRECTIONS

JUNE 21, 1989 - DATE OF ORIGINAL ISSUE
MAY 14, 1990 - FHWA COMMENTS
NOV. 17, 1993 - FHWA COMMENTS, NOTE REVISIONS AND POLE MOUNTING DETAIL MOVED TO E-171B
AUG. 9, 1995 - GENERAL REVISION OF NOTES & DETAILS

APPROVED FOR THIS PROJECT AND/OR DESIGN IMPLEMENTATION. FHWA FINAL APPROVAL PENDING.

APPROVED

DIRECTOR OF ENGINEERING

TRAFFIC AND SAFETY ENGINEER

TRAFFIC CONTROL SIGNALS GENERAL NOTES & DETAILS

/traf/std/std171a.dgn - std171a.1

VERMONT AGENCY OF TRANSPORTATION

STANDARD E-171A

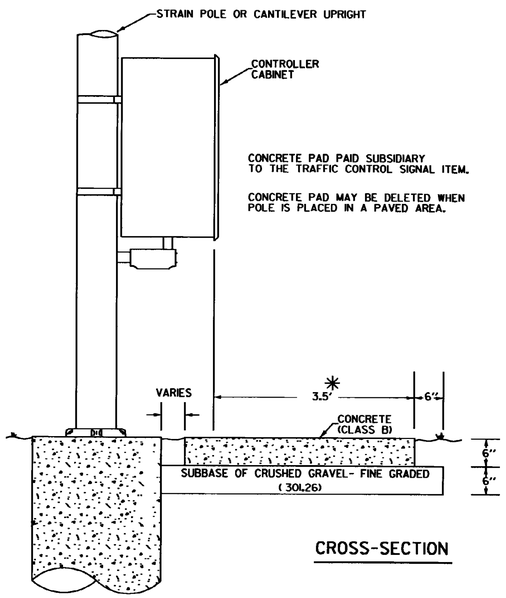

CROSS-SECTION

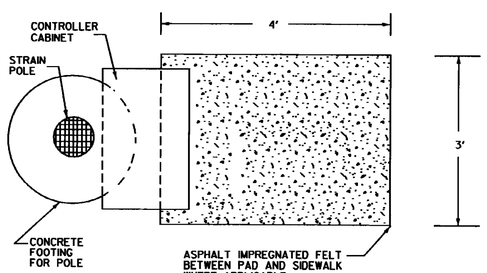

TOP VIEW

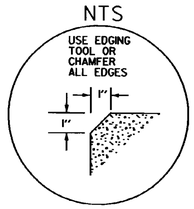

* THE 3.5 FOOT DIMENSION MAY BE ADJUSTED AS NECESSARY WHERE SIDEWALK OR ROADWAY IS ADJACENT TO CONTROLLER.

CONCRETE PAD DETAIL FOR POLE MOUNTED CONTROLLER CABINET

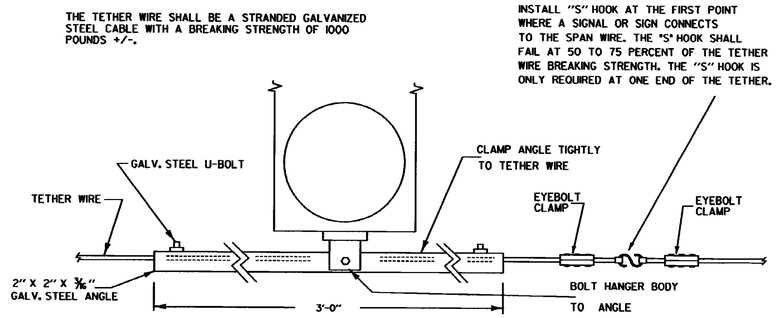

OPTICALLY PROGRAMMED SIGNAL HEAD WHEN MASKING IS REQUIRED

TETHER WIRE ATTACHMENT DETAILS

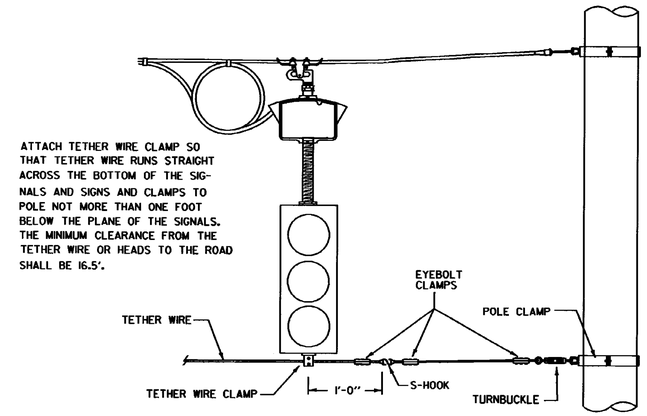

STANDARD OR UNMASKED OPTICALLY PROGRAMMED SIGNAL HEAD

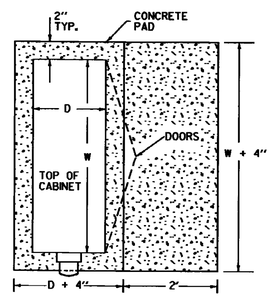

TOP VIEW

THE CABINET DIMENSIONS "D" AND "W" VARY WITH MANUFACTURER. A TYPICAL "P" CABINET HAS DIMENSIONS OF D = 26" AND W = 46".

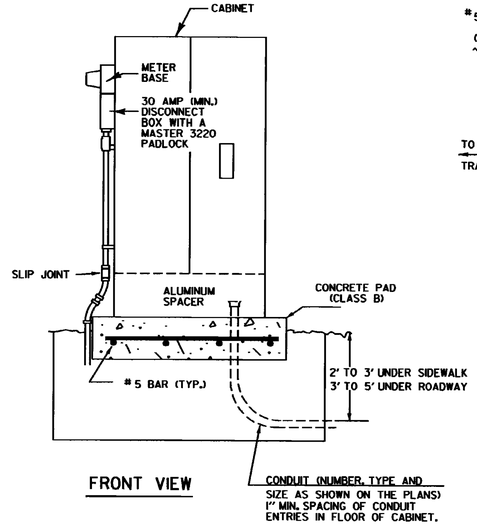

FRONT VIEW

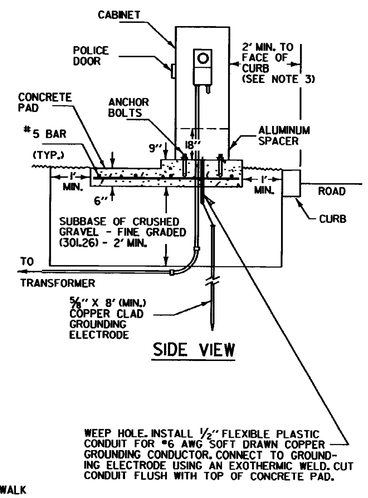

SIDE VIEW

GROUND MOUNTED CONTROLLER CABINET

SIGNAL HEAD AS INDICATED ON PLANS-PEDESTRIAN HEAD DRAWN ONLY AS REFERENCE

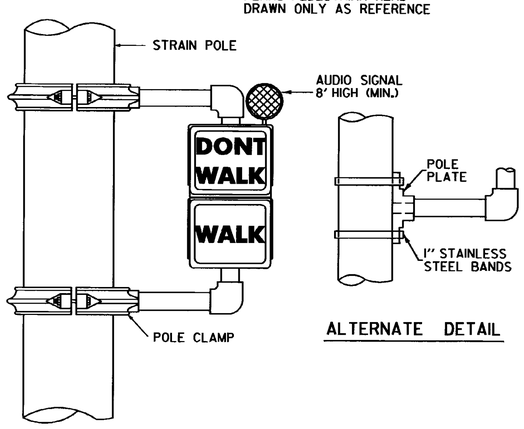

ALTERNATE DETAIL

DETAIL FOR POLE MOUNTING SIGNAL HEAD

NOTES:

1. THE CONCRETE PAD SURFACE SHALL HAVE A BRUSHED FINISH.
2. AN ASPHALT IMPREGNATED FELT PAD SHALL BE USED BETWEEN THE CONTROLLER PAD AND ADJACENT SIDEWALK, WHERE APPLICABLE.
3. THE MINIMUM CLEAR ZONE IN LOW SPEED URBAN AREAS IS 2' BEYOND THE FACE OF CURB. IN OTHER CASES, THE MINIMUM IS EQUAL TO THE CLEAR ZONE AS DEFINED IN AASHTO'S ROADSIDE DESIGN GUIDE.
4. THE CONRETE AND SUBBASE OF CRUSHED GRAVEL SHALL BE SUBSIDIARY TO THE TRAFFIC SIGNAL ITEM.
5. FOR GROUND MOUNTED CABINET INSTALLATIONS:
   A. THE METER SHOULD BE INSTALLED AS SHOWN ON THE PLANS. THE PREFERRED METER LOCATION IS ON A SEPARATE POLE OR STANCHION. HOWEVER, IF LIMITING CONDITIONS EXIST, THE METER MAY BE INSTALLED ON THE CONTROLLER CABINET ON THE SIDE AWAY FROM APPROACHING TRAFFIC.
   B. THE NUMBER 5 BARS SHALL BE SPACED 16" CENTER TO CENTER WITH A MINIMUM OF 3" COVER TO THE GROUND. THEY SHALL RUN BOTH NORMAL AND TRANSVERSE IN THE CONCRETE PAD.
   C. ANCHOR BOLT DIMENSIONS SHALL BE SUPPLIED BY THE CABINET MANUFACTURER. THESE BOLTS SHALL BE GALVANIZED OR STAINLESS STEEL.
   D. THE ALUMINUM SPACER MAY BE DELETED IN URBAN AREAS, IF SO NOTED ON THE PLANS.

OTHER STDS. REQUIRED E - 171A, E - 175

REVISIONS AND CORRECTIONS

JUNE 21, 1989 - DATE OF ORIGINAL ISSUE
MAY 14, 1990 - FHWA COMMENTS
NOV. 17, 1993 - FHWA COMMENTS, NOTE REVISIONS, MOVED CANTILEVER DETAILS TO NEW E-171C AND ADDED TETHER WIRE DETAIL
AUG. 9, 1995 - SPECIFIED MATERIAL UNDER PAD, REVISED NOTES AND MINOR CORRECTIONS

APPROVED FOR THIS PROJECT AND/OR DESIGN IMPLEMENTATION. FHWA FINAL APPROVAL PENDING.

APPROVED

Gordon S. MacArthur
DIRECTOR OF ENGINEERING

David A. Ross
TRAFFIC AND SAFETY ENGINEER

TRAFFIC CONTROL SIGNALS MISC. DETAILS

/traf/std/std171b.dgn - std171b.1

VERMONT AGENCY OF TRANSPORTATION

STANDARD E-171B

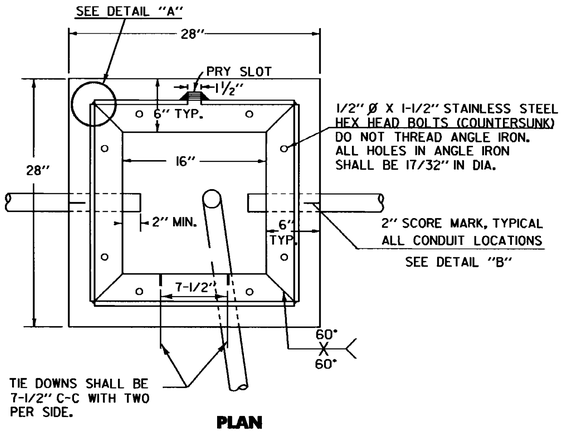

PLAN

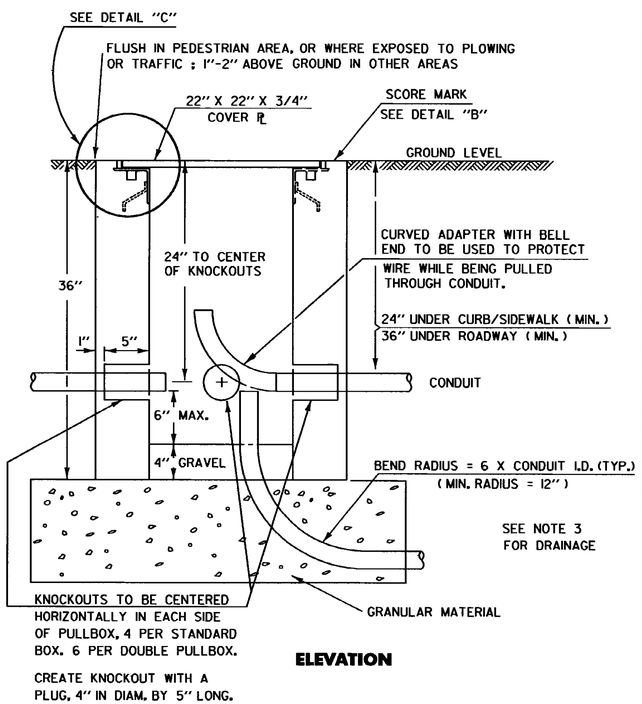

ELEVATION

CONCRETE PULLBOX STANDARD

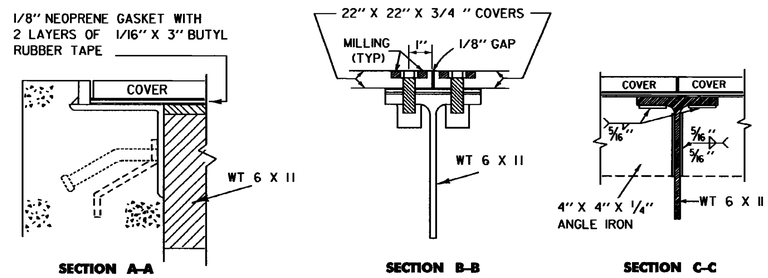

SECTION A-A **SECTION B-B** **SECTION C-C**

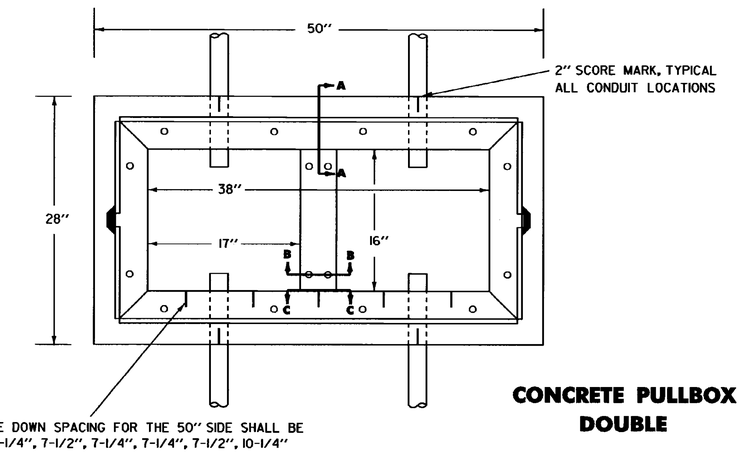

CONCRETE PULLBOX DOUBLE

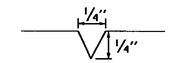

DETAIL "B"

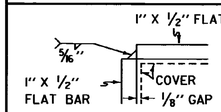

DETAIL "A"

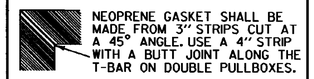

NEOPRENE GASKET SHALL BE MADE FROM 3" STRIPS CUT AT A 45° ANGLE. USE A 4" STRIP WITH A BUTT JOINT ALONG THE T-BAR ON DOUBLE PULLBOXES.

GASKET DETAIL

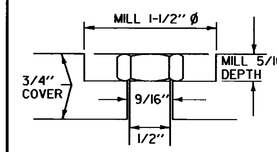

SECTION D-D

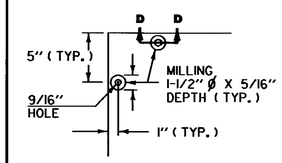

BOLT / MILLING DETAIL

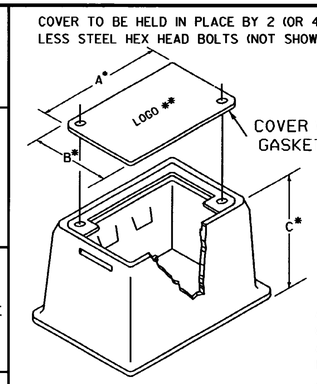

* DIMENSIONS A THRU C AS SHOWN ON THE PLANS. (MINIMUM 18" X 12" X 12" OR AS REQUIRED BY THE NATIONAL ELECTRICAL CODE)

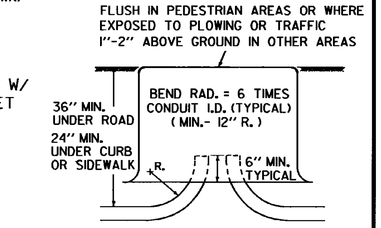

ALL JUNCTION BOXES SHALL HAVE EITHER STRAIGHT OR TAPERED SIDES (SMALLER SQUARE OR RECTANGULAR DIMENSION AT THE TOP). THERE SHALL BE NO OUTWARD PROTRUDING LIPS AT THE TOP OF THE JUNCTION BOX.

JUNCTION BOX

(SHAPE MAY VARY SLIGHTLY WITH MANUFACTURER)

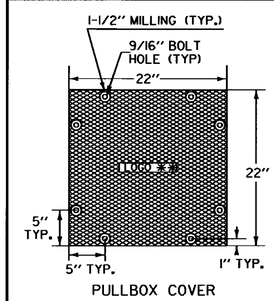

LOGO APPLICATION BY MANUFACTURER WITH TEXT AS SHOWN ON PLANS.

** ALTERNATE LOGOS
SIGNAL
ELECTRIC
LIGHTING

ALL PULLBOX COVERS SHALL BE SKID RESISTANT. ALL COVERS SHALL HAVE THE LOGO PUNCHED OR STAMPED INTO A FLAT RECTANGLAR AREA. MINIMUM LETTER HEIGHT IS 1/2", MINIMUM DEPTH IS 1/16". DOUBLE PULLBOXES REQUIRE ONLY ONE LOGO.

ALL HOLES IN THE COVER SHALL BE 9/16" IN DIA.

PULLBOX COVER & LOGO DETAILS

PULLBOX & JUNCTION BOX NOTES

1. ALL PULLBOXES SHALL BE CONSTRUCTED WITH CONCRETE, CLASS B.
2. CONDUIT SIZE AS SHOWN ON THE PLANS.
3. EXCAVATION FOR THE UNITS SHALL INCLUDE EXCAVATION OF AN AREA ONE FOOT OUTSIDE THE UNITS AND EXTENDING ONE FOOT BELOW THE FINISH GRADE OF THE BOTTOM OF THE UNITS. ONE FOOT OF GRANULAR MATERIAL SHALL BE PLACED IN THE EXCAVATED AREA AND PROPERLY COMPACTED PRIOR TO INSTALLATION. WHERE NECESSARY AND AT THE DISCRETION OF THE ENGINEER, A DRAINAGE PIPE (MINIMUM 3" PERFORATED PVC) SHALL BE PROVIDED FROM THE UNIT TO THE NEAREST APPROPRIATE OUTLET. DRAINAGE WORK SHALL NOT BE PAID DIRECTLY, BUT WILL BE CONSIDERED PART OF THE PULLBOX OR JUNCTION BOX ITEM.
4. ALL EXPOSED METAL HARDWARE, INCLUDING PULLBOX COVERS, FRAMES & ANGLES, SHALL BE GALVANIZED OR STAINLESS STEEL.
5. ALL CONDUIT SHALL ENTER JUNCTION BOXES FROM THE BOTTOM, NOT THROUGH THE SIDE WALL.
6. CONDUITS SHALL NOT ENTER DOUBLE PULLBOXES, DIRECTLY UNDER THE "T" BAR.
7. THE PRY SLOT AND THE COVER GAPS SHALL BE FILLED WITH CAULKING JUST PRIOR TO PROJECT COMPLETION.
8. WHEN INSTALLED ON SLOPES, PULLBOXES AND JUNCTION BOXES SHALL BE TIPPED TO MATCH THE EXISTING SLOPE UP TO A 1 ON 4 SLOPE. ON STEEPER SLOPES, THEY SHALL BE INSTALLED AS ON A 1 ON 4 SLOPE. A SUFFICIENT AMOUNT OF THE EXCAVATED MATERIAL SHALL BE USED TO SHAPE AROUND THE LOW SIDE OF THE BOX SUCH THAT THE MAXIMUM EXPOSURE IS 2". THE MATERIAL SHALL BE TAPERED OVER AN AREA EXTENDING ABOUT 5' FROM THE BOX. IF SUFFICIENT MATERIAL IS NOT AVAILABLE, MATERIAL MEETING THE REQUIREMENTS OF EARTH BORROW (SUBSECTION 703.02) SHALL BE USED. PAYMENT SHALL BE CONSIDERED PART OF THE PULLBOX OR JUNCTION BOX ITEM.
9. ALL COVERS SHALL BE FLUSH WITH THE BOXES AND FRAMES.
10. ALL CONDUITS ENTERING A PULLBOX OR JUNCTION BOX SHALL HAVE BUSHINGS TO PROTECT THE CABLES.

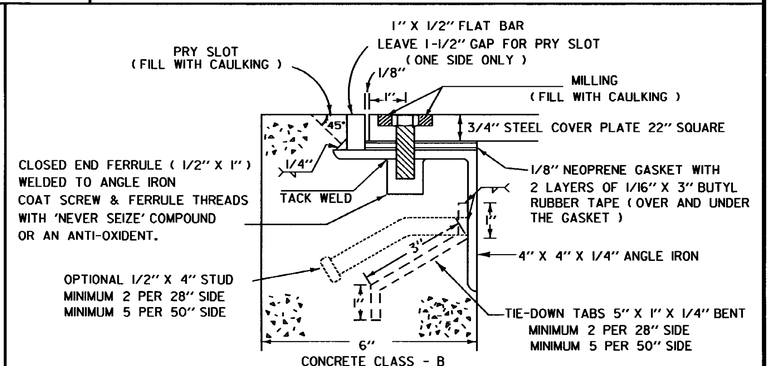

DETAIL "C"

OTHER STDS. REQUIRED NONE

REVISIONS AND CORRECTIONS

SEPT. 10, 1987 - DATE OF ORIGINAL ISSUE
APRIL 1, 1989 - REVISED COVER DIMENSIONS
MAY 26, 1989 - FHWA COMMENTS
NOV. 17, 1993 - MAJOR REVISIONS, STANDARDIZATION OF PULLBOX COVERS
AUG. 9, 1995 - REVISED NOTE 8, CHANGED LOGO OPTIONS

APPROVED FOR THIS PROJECT AND/OR DESIGN IMPLEMENTATION. FHWA FINAL APPROVAL PENDING.

APPROVED

Gordon R. MacArthur
DIRECTOR OF ENGINEERING

David A. Ross
TRAFFIC AND SAFETY ENGINEER

PULLBOXES AND JUNCTION BOXES

/traf/std/stdel73.dgn - stdel73.l

VERMONT AGENCY OF TRANSPORTATION

STANDARD

E-173

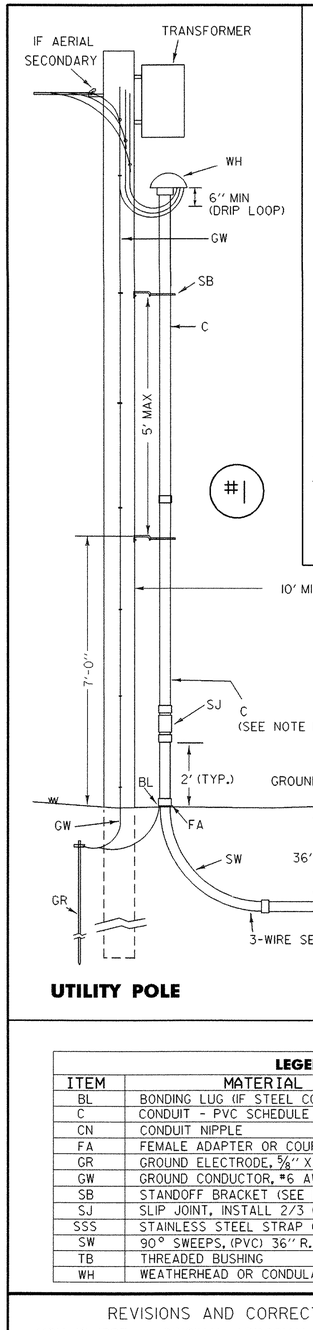

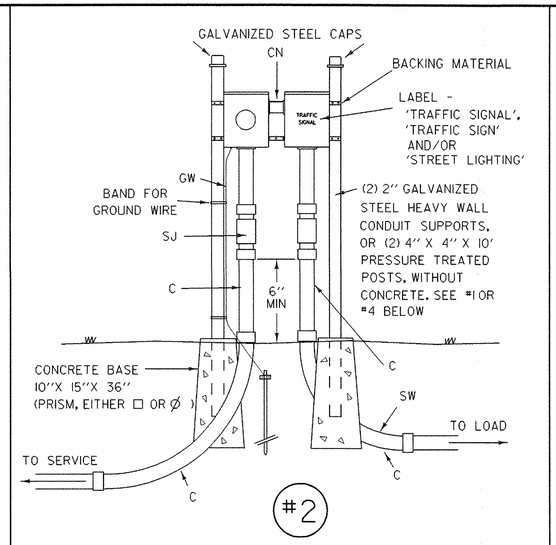

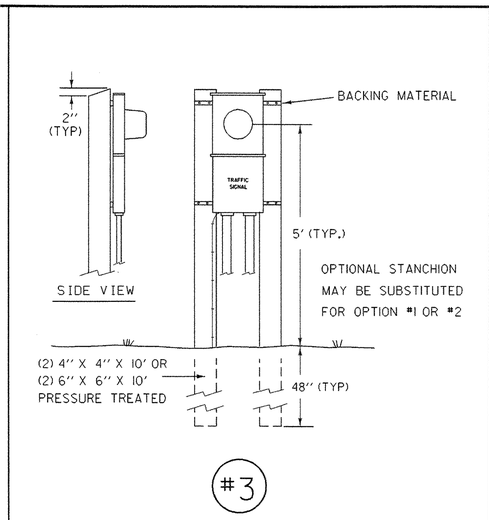

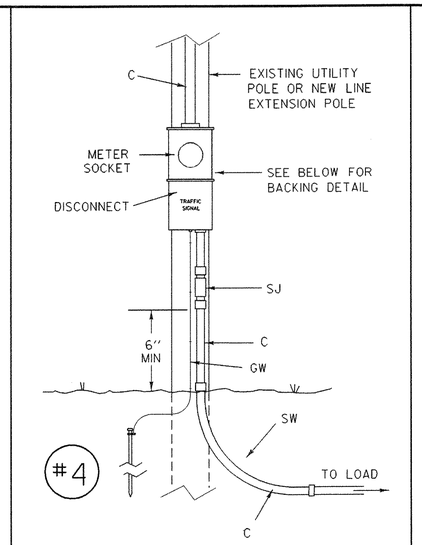

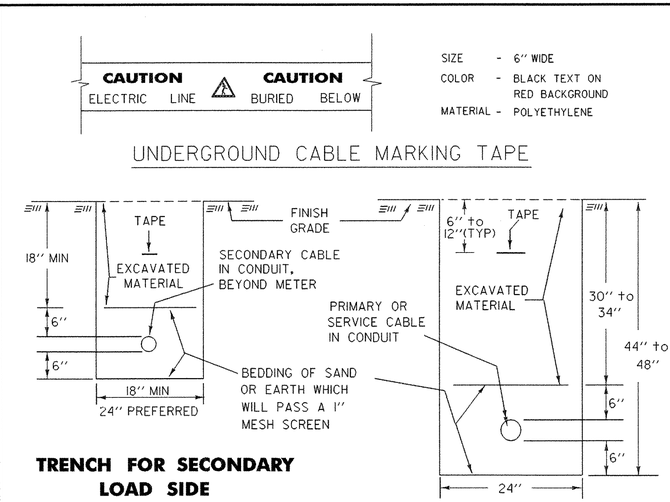

TRENCH FOR SECONDARY LOAD SIDE

TRENCH FOR PRIMARY OR SERVICE SIDE

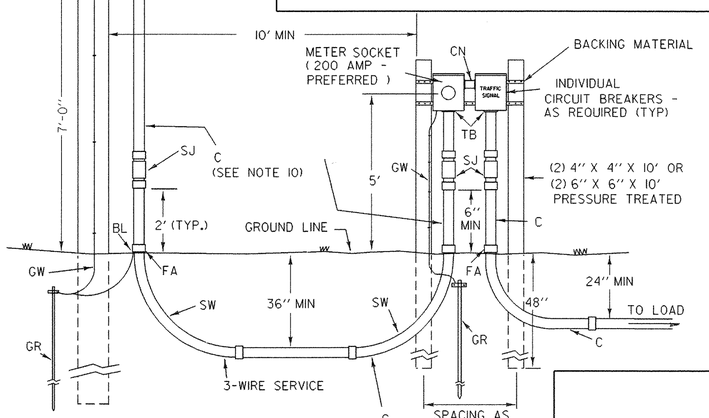

UTILITY POLE

STANCHION

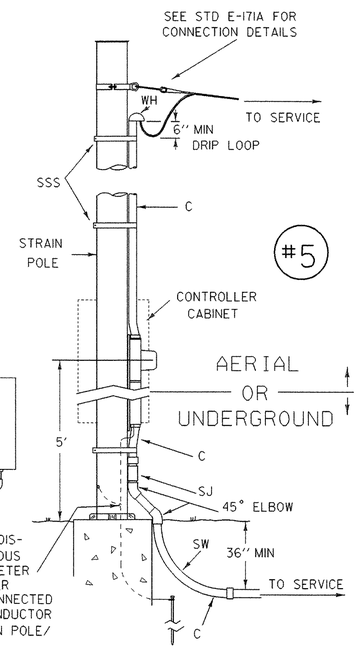

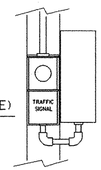

THE POWER SERVICE METER AND DISCONNECT SHALL HAVE A CONTINUOUS GROUND CONDUCTOR FROM THE METER TO THE GROUND ELECTRODE. OTHER GROUND CONDUCTORS MAY BE CONNECTED TO THIS CONTINUOUS GROUND CONDUCTOR WITH SPLIT NUTS. SEE THE STRAIN POLE/ FOOTING DETAIL SHEET.

DIRECT SERVICE TO STRAIN POLE

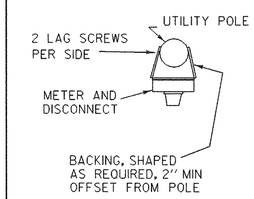

BACKING FOR OPTION #4

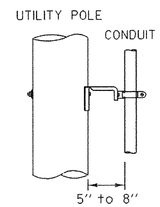

STANDOFF BRACKET

USUALLY FURNISHED BY THE UTILITY COMPANY

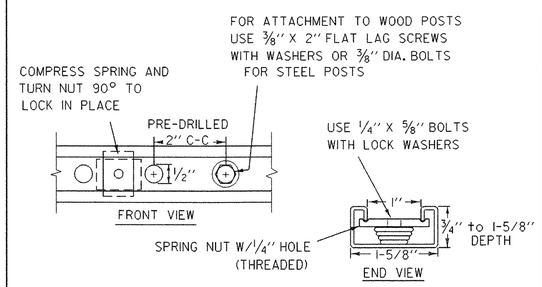

BACKING MATERIAL DETAIL

ALL MATERIAL & HARDWARE TO BE GALVANIZED

NOTES

THE CONTRACTOR SHALL CONTACT THE LOCAL UTILITY COMPANY AND ADHERE TO ANY EQUIPMENT, PROCEDURE AND CRITERIA VARIATIONS WHICH PERTAIN. SEE SPECIAL PROVISIONS FOR THE UTILITY CONTACT. THE CONTRACTOR SHALL PROVIDE TO THE ENGINEER ALL SPECIFIC INFORMATION CONCERNING UTILITY REQUIREMENTS PRIOR TO THE PRECONSTRUCTION MEETING OR THE START OF WORK, WHICHEVER IS FIRST.

1. ALL CONSTRUCTION MUST COMPLY WITH THE NATIONAL ELECTRICAL CODE AND UTILITY COMPANY REQUIREMENTS.
2. STANCHIONS MUST BE PLACED OUTSIDE THE CLEAR ZONE OR THEY MUST BE PROTECTED BY GUARDRAIL. THE LOCATION OF STANCHIONS MUST BE APPROVED BY THE UTILITY COMPANY PRIOR TO CONSTRUCTION.
3. THE CONTRACTOR IS RESPONSIBLE FOR PROVIDING ALL MATERIALS, EXCEPT FOR STANDOFF BRACKETS WHICH ARE USUALLY FURNISHED AND INSTALLED BY THE UTILITY COMPANY. THE CONTRACTOR IS RESPONSIBLE FOR INSTALLING ALL MATERIALS, EXCEPT THOSE ATTACHED TO THE UTILITY POLE. ALL MATERIAL AND INSTALLATION COSTS FOR THE POWER SERVICE, EXCEPT FOR THE WIRED CONDUIT, SHALL BE CONSIDERED PART OF THE TRAFFIC SIGNAL, STREET LIGHTING OR SIGN ITEM, WHICHEVER IS APPLICABLE.
4. ALL EXPOSED METAL EQUIPMENT MUST BE GROUNDED.
5. ATTACH CONDUIT ON THE SIDE OF THE POLE OR STANCHION AWAY FROM TRAFFIC. CONTACT THE LOCAL UTILITY COMPANY FOR FINAL PLACEMENT.
6. MATERIALS AND DIMENSIONS APPLY TO ALL STANCHIONS.
7. IN RURAL AREAS, WITH THE PERMISSION OF THE UTILITY COMPANY, THE METER AND THE DISCONNECT MAY BE INSTALLED ON AN EXISTING UTILITY POLE. SEE OPTION #4.
8. OPTION #1, #2, #3 OR #5 MAY BE USED IN URBAN AREAS, EITHER RESIDENTIAL OR COMMERCIAL, OR AS DETERMINED BY THE UTILITY AND APPROVED BY THE ENGINEER.
9. THE METER AND DISCONNECT SHALL BE ATTACHED THE STANCHION/POLE WITH TWO LENGTHS OF GALVANIZED BACKING MATERIAL.
10. SERVICE CONDUIT SHALL BE MINIMUM 2 INCH. SMALLER CONDUIT MAY BE ALLOWED WITH PRIOR APPROVAL FROM THE UTILITY AND THE ENGINEER AND AFTER CONSULTATION WITH THE HIGHWAY, SAFETY & DESIGN DIVISION.
11. WHEN MORE THAN ONE GROUND ELECTRODE IS REQUIRED, THEY SHALL BE A MINIMUM OF 6' APART.
12. METERS MAY NOT BE REQUIRED BY ALL UTILITY COMPANIES.

LEGEND

ITEM	MATERIAL
BL	BONDING LUG (IF STEEL CONDUIT)
C	CONDUIT - PVC SCHEDULE 80 (2" MIN.)
CN	CONDUIT NIPPLE
FA	FEMALE ADAPTER OR COUPLINGS AS REQUIRED
GR	GROUND ELECTRODE, 5/8" X 8' (MIN) COPPER CLAD (2 REQ.)
GW	GROUND CONDUCTOR, #6 AWG CU (MIN)
SB	STANDOFF BRACKET (SEE DETAIL)
SJ	SLIP JOINT, INSTALL 2/3 OPEN
SSS	STAINLESS STEEL STRAP (1" MIN)
SW	90° SWEEPS, (PVC) 36" R. - SERVICE, 24" R. - LOAD
TB	THREADED BUSHING
WH	WEATHERHEAD OR CONDULATOR

OTHER STDS. REQUIRED E - 171A (WHEN OPTION #5 IS USED)

SEE PLANS FOR OPTION #

REVISIONS AND CORRECTIONS

NOV. 17, 1993 - ORIGINAL APPROVAL DATE

JUN. 08, 2009 - NEC UPDATES FOR PVC CONDUIT

APPROVED

Kevin S. Marshia
HIGHWAY, SAFETY & DESIGN ENGINEER

Richard Fehrault
DIRECTOR OF PROGRAM DEVELOPMENT

Mark D. Richter
FEDERAL HIGHWAY ADMINISTRATION

POWER DROP STANCHIONS

/traf/std/stdel75.dgn - stdel75.1

VERMONT AGENCY OF TRANSPORTATION

STANDARD

E-175

ROUND – TAPERED, ALUMINUM OR STEEL POLES

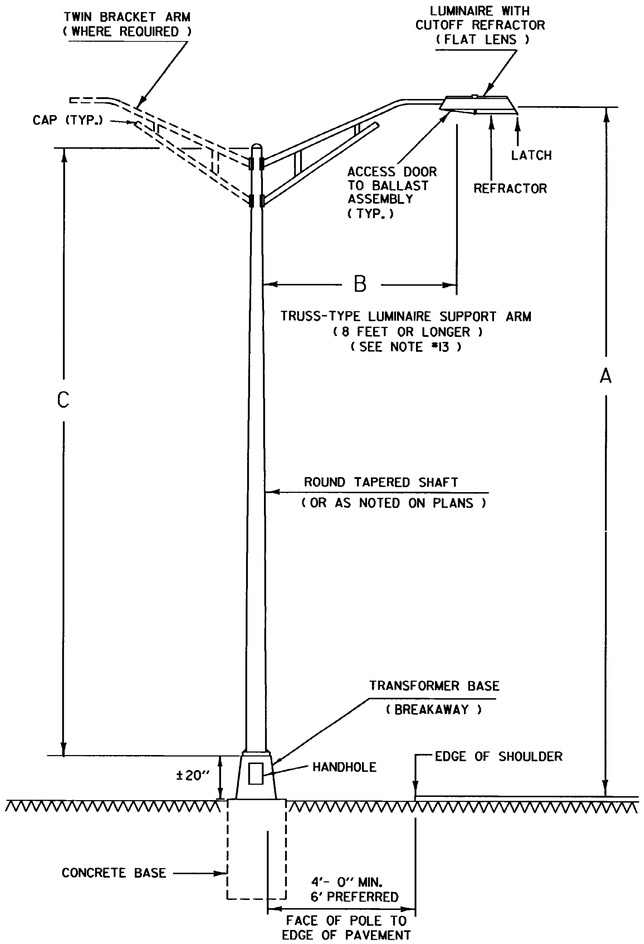

DIMENSIONS:

A = MOUNTING HEIGHT
B = LUMINAIRE SUPPORT ARM LENGTH
C = POLE HEIGHT

FOR OTHER BREAKAWAY SUPPORTS SEE STANDARD SHEET E-180B

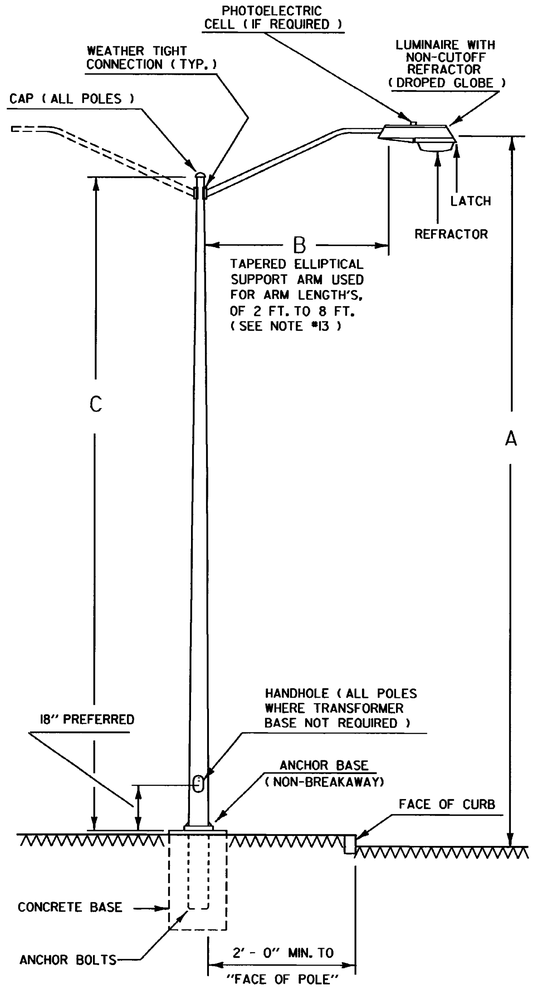

NOTES:

ALL SUPPORT ARMS TO BE EQUIPPED WITH 2" SLIPFITTER FOR MOUNTING LUMINAIRE UNLESS OTHERWISE INDICATED.

NON-BREAKAWAY SUPPORTS ARE APPROPRIATE IN SOME URBAN AREAS AS OUTLINED IN THE AASHTO "ROADSIDE DESIGN GUIDE".

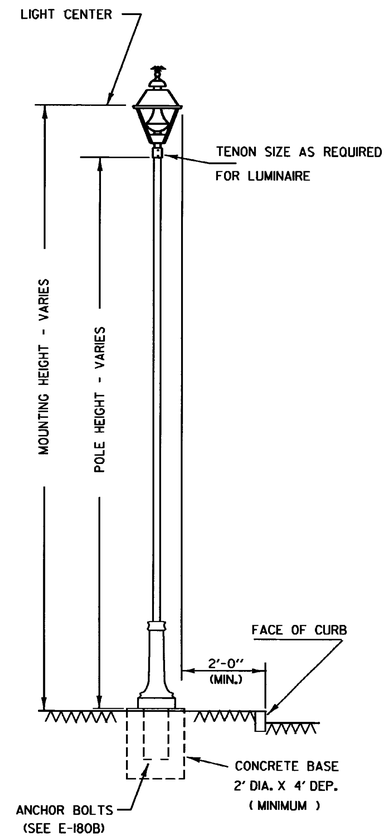

ORNAMENTAL LIGHTING

POLES, ANCHOR BASES, ARMS, AND LUMINAIRES.
GENERAL NOTES

1. NO POLE SHALL BE INSTALLED WITHOUT A LUMINAIRE ALREADY ATTACHED.
2. ANCHOR BASE AND ANCHOR BOLT DIMENSIONS ARE SHOWN ON STANDARD SHEET E-180B.
3. ALL LIGHT POLES WHICH ARE PROVIDED WITH A BREAKAWAY FEATURE SHALL CONFORM TO THE REQUIREMENTS OF THE AASHTO 1985 STANDARD SPECIFICATIONS FOR STRUCTURAL SUPPORTS FOR HIGHWAY SIGNS, LUMINAIRES, AND TRAFFIC SIGNALS, SECTION 7 AND SUBSEQUENT REVISIONS.
4. A 12 FOOT OR LONGER ARM REQUIRES A 6 INCH OUTSIDE DIAMETER POLE TOP.
5. LUMINAIRES SHALL MEET SPECIFICATIONS AS SHOWN ON THE PLANS.
6. ALL ELECTRICAL MATERIAL AND ELECTRICAL WORK SHALL BE SUBJECT TO INSPECTION AND APPROVAL BY THE AREA ELECTRICAL INSPECTOR AND/OR THE POWER COMPANY WITH JURISDICTION IN THE PROJECT AREA.
7. ALL WORK MUST MEET THE REQUIREMENTS OF THE NATIONAL ELECTRICAL CODE, AS WELL AS LOCAL AND STATE CODES.
8. ALL STREET LIGHT POLES (EXCEPT ORNAMENTAL POLES) SHALL HAVE A METAL TAG ATTACHED TO THE POLE, SEE PLAN DETAIL SHEET. PAYMENT FOR TAGS WILL BE SUBSIDIARY TO OTHER STREET LIGHTING ITEMS.
9. POLES, BASE PLATES, AND ARMS SHALL MEET THE SPECIFICATION OF THE LATEST EDITION OF AASHTO-AGC-ARTBA'S "GUIDE TO STANDARDIZED HIGHWAY LIGHTING POLE HARDWARE" OR AS OTHERWISE NOTED ON THE PLANS.
10. ANCHOR BOLTS WILL BE ACCEPTABLE WITH EITHER ROLLED OR CUT-IN THREADS WITH MINOR VARIATIONS FROM THE SPECIFIED DIAMETER.
11. ALL LIGHT POLES SHALL HAVE A BREAKAWAY DESIGN FEATURE UNLESS OTHERWISE NOTED ON THE PLANS.
12. ALL WELDS SHALL BE AT LEAST AS STRONG AS THE MATERIAL BEING WELDED.
13. LUMINAIRE SUPPORT ARMS IN A LENGTH OF 8 FEET ARE AVAILABLE IN EITHER SINGLE MEMBER OR TRUSS TYPE. PLAN SHEET SHALL SPECIFY WHICH IS TO BE USED. IF NOT SPECIFIED, OPTIONAL, OR IF REPLACEMENT, MATCH EXISTING OR SURROUNDING TYPE.
14. POLE OFFSET (FACE OF POLE TO BACK OF GUARDRAIL) SHALL BE EQUAL TO OR GREATER THAN THE DEFLECTION DISTANCE SHOWN IN THE CHART. (SEE E-180B)
15. POLES FOR ORNAMENTAL LIGHTING ARE AVAILABLE IN MANY MATERIALS, SHAPES, STYLES AND LENGTHS, PLANS SHALL SPECIFY.

THIS SHEET NOT TO SCALE	OTHER STDS. REQUIRED	E-180B, E-181

REVISIONS AND CORRECTIONS

AUG. 9, 1995 - DATE OF ORIGINAL ISSUE

APPROVED FOR THIS PROJECT AND/OR DESIGN IMPLEMENTATION. FHWA FINAL APPROVAL PENDING.

APPROVED

Gordon S. MacArthur
DIRECTOR OF ENGINEERING

David A. Ross
TRAFFIC AND SAFETY ENGINEER

STREET LIGHTING DETAILS

/traf/std/stdel80a.dgn/stdel80a.1

VERMONT AGENCY OF TRANSPORTATION

STANDARD
E-180A

CONCRETE BASE

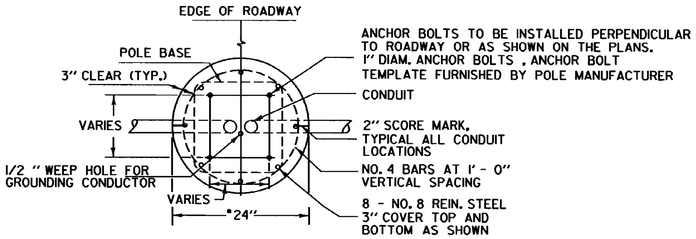

* USE 30" DIAM. WITH TRANSFORMER BASES, ARM OVER 8' LONG OR WHEN OTHERWISE NOTED.

PLAN VIEW

NOTE: SEE CHART AT RIGHT AND NOTE BELOW CHART FOR OTHER ANCHOR BOLT DIMENSIONS.

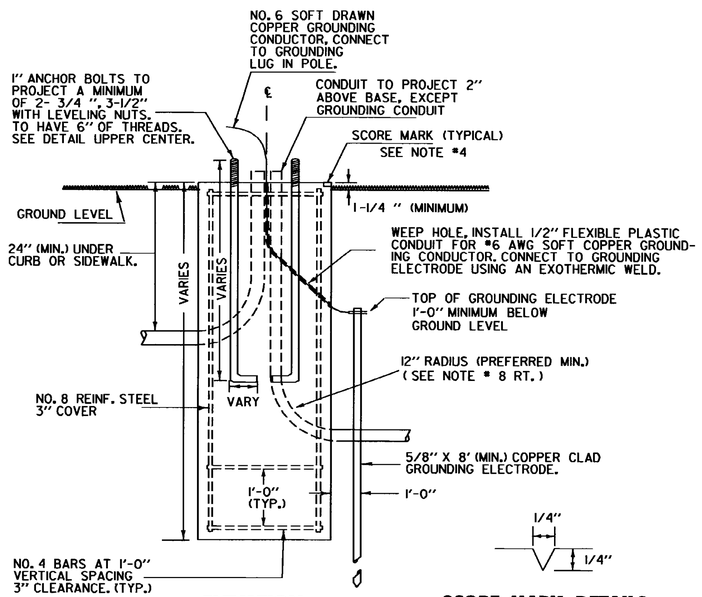

ELEVATION

SCORE MARK DETAILS

NOTES:

THERE ARE FOUR BASIC SIZES FOR CONCRETE BASES, 2 FEET X 4 FEET TO BE USED WITH POLE TOP MOUNTED LUMINAIRES WITH A MOUNTING HEIGHT OF LESS THAN 20 FEET. A CONCRETE BASE SIZE OF 2 FEET X 6 FEET FOR POLES WITH LESS THAN 40 FOOT MOUNTING HEIGHT AND ARMS UP TO 8 FEET IN LENGTH. THIRD, A BASE SIZE OF 2-1/2 FEET X 6 FEET FOR POLES WITH LESS THAN 40 FOOT MOUNTING HEIGHT AND ARMS LESS THAN 10 FEET IN LENGTH WHICH WILL BE INSTALLED ON A TRANSFORMER BASE. FORTH, A BASE SIZE 2-1/2 FEET X 8 FEET FOR A 40 FOOT OR GREATER MOUNTING HEIGHT, A 10 FOOT OR GREATER ARM LENGTH WITH OR WITHOUT TRANSFORMER BASE.

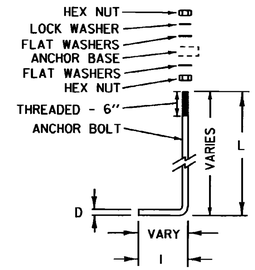

ALL ANCHOR BOLTS TO BE STAINLESS STEEL

DIMENSION TABLE									
MOUNTING HEIGHT	NO.OF ARMS	ANCHOR BASE				SLIP BASE			
		D	L	I	UNC	D	L	I	UNC
30	1	1	36	4	8	1-1/4	42	6	7
	2								
35	1	1	36	4	8	1-1/4	42	6	7
	2								
40	1	1	36	4	8	1-1/4	42	6	7
	2	1-1/4	42	6	7				

NOTE:

FOR MOUNTING HEIGHTS LESS THAN 30 FEET, USE THE ANCHOR BOLT DIMENSIONS AS RECOMMENDED BY THE POLE MANUFACTURER. LENGTH, HOOK, DIAMETER AND BOLT PROJECTION.

TOP VIEW OF

ANCHOR BASE

(NON-BREAKAWAY)

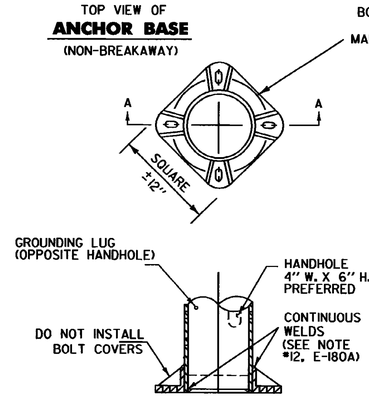

ANCHOR BASE

NOTES:

1) DIMENSIONS SHOWN FOR ANCHOR BASE AND TRANSFORMER BASE MAY VARY SLIGHTLY WITH DIFFERENT MANUFACTURERS.

2) ANCHOR BOLT TEMPLATE FURNISHED BY POLE MANUFACTURER.

VARIOUS BREAKAWAY OPTIONS

TYPE SHALL BE SPECIFIED ON PROJECT PLANS

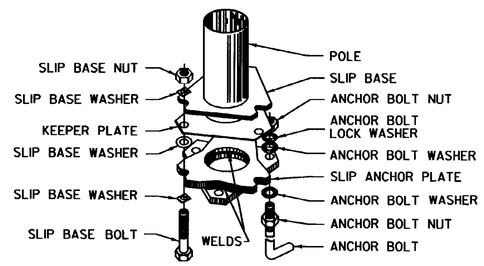

SLIP BASE ASSEMBLY

(BREAKAWAY)

TOP VIEW OF

TRANSFORMER BASE

(RECOMMENDED BREAKAWAY FEATURE)

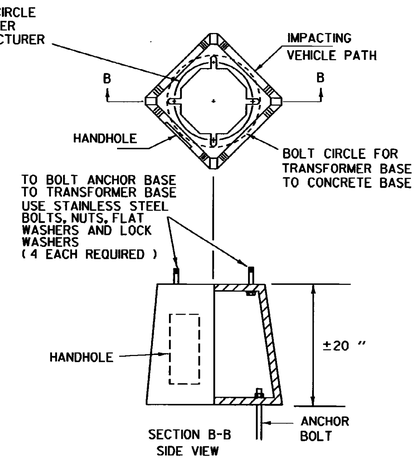

TRANSFORMER BASE

3) FOR BREAKAWAY DESIGN A TRANSFORMER BASE, BREAKAWAY COUPLINGS, SLIP BASE OR OTHER APPROVED METHOD SHALL BE INSTALLED BETWEEN THE ANCHOR BASE AND THE CONCRETE BASE.

CONCRETE BASE AND GENERAL NOTES

1. ALL CONCRETE BASES TO BE CONCRETE, CLASS B, AND SHALL HAVE A SMOOTH LEVEL TOP SURFACE FINISHED WITH A 1/2 INCH RADIUS EDGING TOOL.
2. ALL REINFORCING STEEL TO CONFORM TO THE REQUIREMENTS FOR ''REINFORCING STEEL.''
3. TEMPLATE FOR ANCHOR BOLTS, STAINLESS STEEL ANCHOR BOLTS, NUTS, AND WASHERS TO BE OBTAINED BY CONTRACTOR PRIOR TO CONSTRUCTION OF BASES.
4. SCORE TOP OF CONCRETE BASE TO SHOW LOCATION OF CONDUIT(S).
5. CONDUIT SIZE - AS SHOWN ON THE PLANS.
6. ALL EXPOSED METAL HARDWARE SHALL BE GALVANIZED OR STAINLESS STEEL.
7. IF THE ELECTRICAL CONDUIT IN THE CONCRETE BASE IS GALVANIZED STEEL, GROUNDING BUSHINGS SHALL BE USED.
8. THE MINIMUM RADIUS FOR RIGID METALLIC OR NON-METALLIC ELECTRICAL CONDUIT SHALL BE SIX TIMES THE INSIDE DIAMETER OF THE CONDUIT.
9. SEE STANDARD SHEET E-173 FOR PULL BOX DETAIL.
10. ANY BREAKAWAY FEATURE WHICH HAS BEEN APPROVED FOR USE ON FEDERAL AID HIGHWAY PROJECTS AND MEET THE 1985 "AASHTO" REQUIREMENT FOR A BREAKAWAY FEATURE MAY BE USED UNLESS A SPECIFIC TYPE IS STATED ON THE PLANS.

GUARDRAIL DEFLECTION CHART

PER AASHTO - ROADSIDE DESIGN GUIDE 1988

TYPE		GR POST SPACING	DEFLECTION
THREE CABLE	W/STEEL POSTS	16' - 0"	12'
	W/WOODEN POSTS	12' - 6"	12'
W-BEAM	W/WEAK POST	12' - 6"	7'
	W/STRONG POST	6' - 3"	3'
BOX BEAM		6' - 0"	5'
THRIE BEAM	W/WEAK POST	12' - 6"	4'
	W/STRONG POST	6' - 3"	2'

THIS CHART LISTS THE THEORETICAL DEFLECTION DISTANCE UPON IMPACT OF VARIOUS GUARDRAIL WITH DIFFERENT TYPES AND SPACINGS OF POSTS.

STAINLESS STEEL BREAKAWAY SUPPORT COUPLINGS

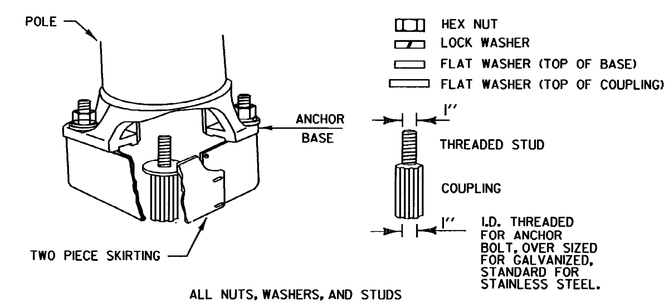

ALL NUTS, WASHERS, AND STUDS SHALL BE STAINLESS STEEL.

THIS SHEET NOT TO SCALE	OTHER STDS. REQUIRED	E-173, E-180A, E-181

REVISIONS AND CORRECTIONS

AUG. 9, 1995 - DATE OF ORIGINAL ISSUE

APPROVED FOR THIS PROJECT AND/OR DESIGN IMPLEMENTATION. FHWA FINAL APPROVAL PENDING.

APPROVED

DIRECTOR OF ENGINEERING

TRAFFIC AND SAFETY ENGINEER

STREET LIGHTING DETAILS

/traf/std/stdel80b.dgn/stdel80b.1

VERMONT AGENCY OF TRANSPORTATION

STANDARD

E-180B

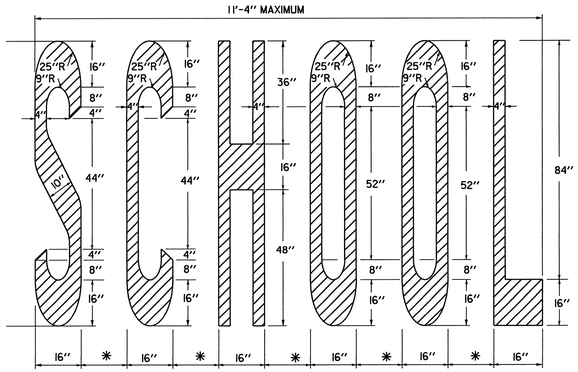

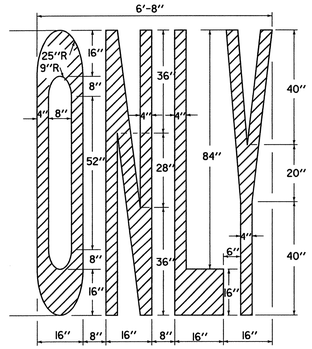

* (4''-8'') - ADJUST TO AVAILABLE PAVEMENT WIDTH

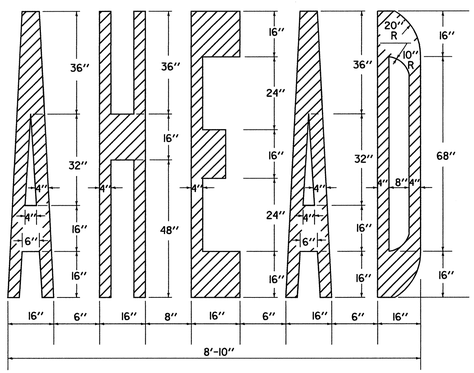

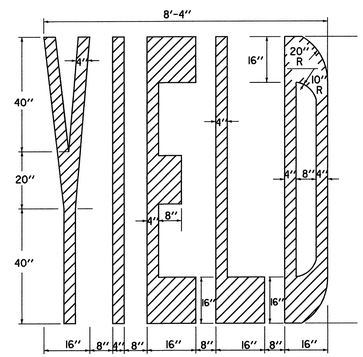

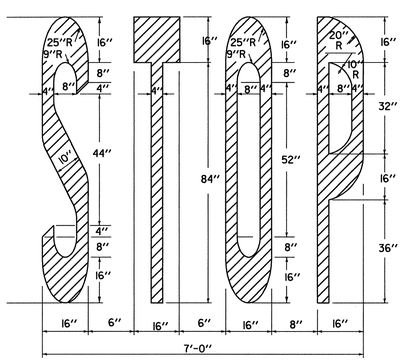

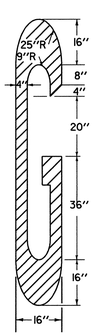

THE LETTER "G" PERTAINS TO THE WORD "SIGNAL" FOR OTHER LETTERS, SEE ABOVE.

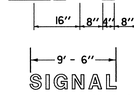

6" LETTER SPACING

LETTER HEIGHT

DIMENSIONS ARE FOR 8' - 4" LETTER HEIGHTS. A LESSER HEIGHT OF 8' - 0" IS ACCEPTABLE AS LONG AS THE DIMENSIONS ARE PROPORTIONAL TO THE DETAILS SHOWN SEE NOTE BELOW.

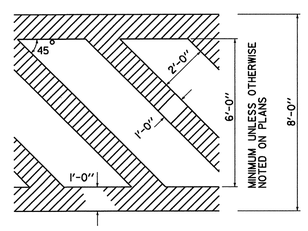

ARROWS AND WORD MARKINGS THAT CONFORM TO THE DIMENSIONS SHOWN ON THIS SHEET OR AS DETAILED IN THE BOOKLET ENTITLED "STANDARD ALPHABETS FOR HIGHWAY SIGNS AND PAVEMENT MARKINGS" AND THE "MANUAL ON UNIFORM TRAFFIC CONTROL DEVICES" (CURRENT EDITION) PREPARED BY THE FEDERAL HIGHWAY ADMINISTRATION WILL BE ACCEPTABLE.

LETTER IN WORD MARKING AND CROSSWALK DETAILS

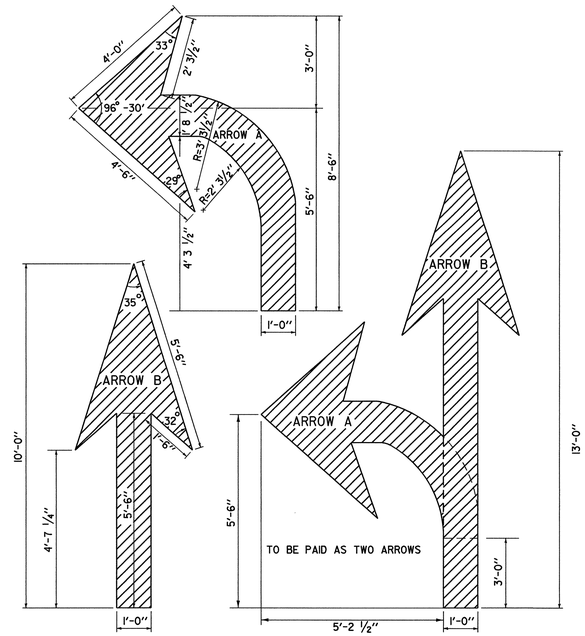

ARROW DETAILS

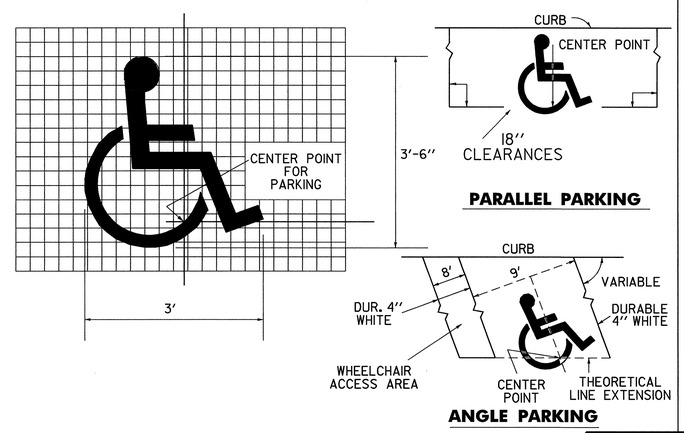

HANDICAPPED PAVEMENT MARKING DETAILS

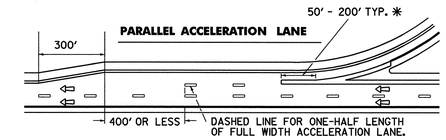

* USE LONGER LENGTH TO EMPHASIZE SITUATIONS WHERE THE CROSSING REQUIRES UNUSUAL CARE SUCH AS HIGH VOLUME MERGE AREAS.

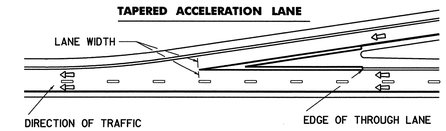

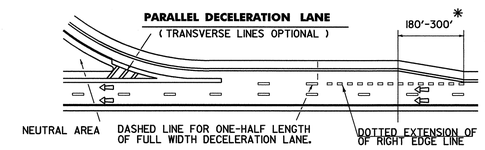

* SHORTER TAPERS GIVE A BETTER TARGET VALUE, HOWEVER ALIGNMENT MAY DICTATE A LONGER TAPER. RESIDENT ENGINEER SHALL ESTIMATE LENGTH.

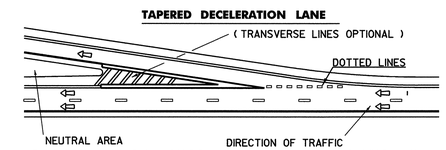

TRANSVERSE LINES SHALL CONSIST OF A WHITE LINE 2 TIMES WIDER THAN THE MAIN LINE MARKING WIDTH SPACED 5'-0" C-C AND SET AT 45° TO MAIN LINE EDGE LINES. THESE MARKINGS SHALL BE USED TO INCREASE VISIBILITY DUE TO DIFFICULT VERTICAL OR HORIZONTAL ALIGNMENT, AS DIRECTED BY THE RESIDENT ENGINEER.

RAMP MARKINGS

LEGEND

- WHITE LINES
- YELLOW LINES
- CHANNELIZATION WHITE LINES
- WHITE DOTTED LINES (2' SOLID - 4' GAP)
- DIRECTION OF TRAFFIC FLOW

IMPORTANT NOTE
ACTUAL LOCATION OF GORE MARKING TRANSITION CURVE MUST BE OFFSET FROM THE THEORETICAL RAMP EXTENSION LINE TO PROVIDE A VISUALLY SMOOTH RAMP ENTRANCE.

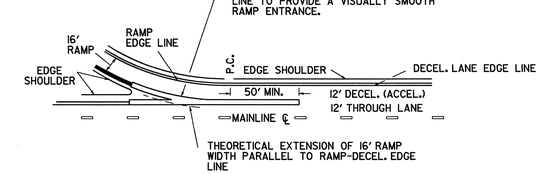

DETAIL - GORE MARKING TRANSITION CURVE

THIS SHEET IS NOT TO SCALE

OTHER STDS. REQUIRED

REVISIONS AND CORRECTIONS

SEPT. 10, 1987 - DATE OF ORIGINAL ISSUE
JAN. 23, 1989 - ADDED DOTTED LINES, "SIGNAL" DIMENSIONS, CLARIFIED LETTER HEIGHT.
AUG. 18, 1995 - MISC. NOTE CHANGES
FEB. 1, 1999 - CHANGED NOTES FOR ACCELERATION & DECELERATION LANES

APPROVED

Robert F. Stallmeyer Actng
DIRECTOR OF PROJECT DEVELOPMENT

PAVEMENT MARKING DETAILS

/traf/std/stdel91.dgn/stdel91.1

VERMONT AGENCY OF TRANSPORTATION

STANDARD E-191

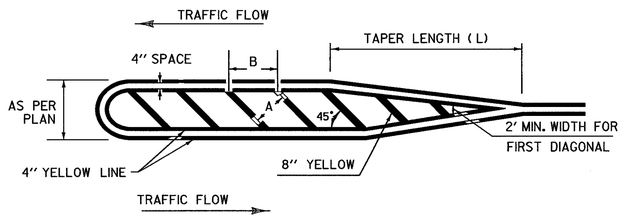

PAINTED ISLAND DETAIL

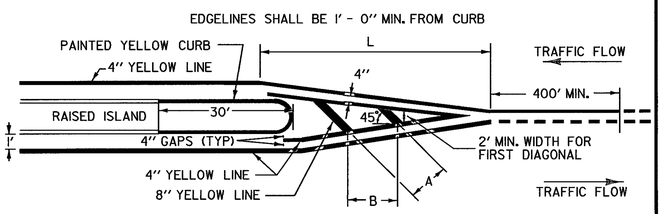

ISLAND APPROACH MARKINGS

DIMENSIONS A	DIMENSIONS B	CONDITIONS FOR USE	
5'	7'	LOW SPEED OR HIGH SPEED/W POOR SIGHT DISTANCE, <200'	WHERE LENGTH OF DIAGONAL AREA IS 75' MAX.
10'	14'	HIGH SPEED AND GOOD SIGHT DISTANCE, ≥200'	WHERE LENGTH OF DIAGONAL AREA EXCEEDS 75'

TAPER LENGTH NOTES

1. FOR DESIGN OF LEFT OR RIGHT TURN LANES REFER TO VTRANS * GUIDELINE FOR DETERMINING STORAGE, TAPER AND DECELERATION LENGTHS FOR LEFT AND RIGHT-TURN LANES AT INTERSECTIONS*
2. MINIMUM LENGTH OF TAPER = (L) — L = 100 FEET ≤ 30 mph; L = 180 FEET > 30 mph
3. THE ENTIRE TAPER LENGTH MAY BE USED FOR DECELERATION.

NOTE:

A SOLID LINE IN THE DIRECTION OF TRAVEL IS BEGUN AT A LOCATION 400 FEET MIN. IN ADVANCE OF THE BEGIN TAPER FOR THE PAVEMENT WIDTH TRANSITION.

PASSING ZONE SHOWN FOR REFERENCE ONLY, ACTUAL MARKINGS BASED ON FIELD CONDITIONS.

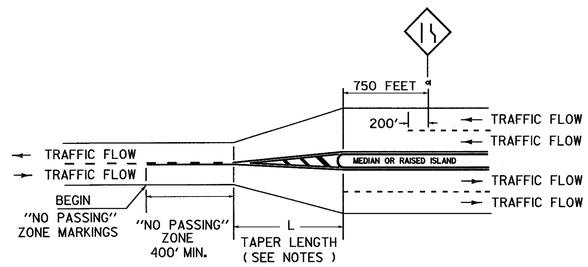

"NO PASSING" ZONE LAYOUT IN PAVEMENT WIDTH TRANSITIONS, TWO LANE HIGHWAY TO DIVIDED HIGHWAY

THE FOLLOWING GUIDELINES WILL BE USED WHEN PAINTING ISLAND ON STATE HIGHWAYS AND RECOMMENDED FOR ISLANDS ON OTHER SYSTEMS WITHIN THE STATE.

I. PAINTING: ISLANDS WHICH ARE FOUR FEET IN WIDTH AND TRIANGLE ISLANDS WHICH ARE LESS THAN FOUR HUNDRED AND FIFTY SQUARE FEET SHALL BE PAINTED ENTIRELY. TRIANGLES WHICH ARE FOUR HUNDRED AND FIFTY SQUARE FEET AND LARGER SHALL BE PAINTED WITH A FOUR FOOT BORDER AS SHOWN ON FIGURE "A" OF THE PAINTED ISLAND DETAIL.

II. SIGNS: ALL APPROACH NOSES TO THE ISLANDS IN THE LINE OF TRAFFIC WILL BE SIGNED WITH A KEEP RIGHT (R-47) SIGN AS WELL AS OBJECT MARKERS PLACED BACK TO BACK TO INDICATE THE BEGINNING (END) OF THE ISLAND.

III. EXCEPTIONS: THERE WILL BE SPECIAL CASES WHICH REQUIRE AN EXCEPTION TO, OR MODIFICATION OF THIS GUIDELINE. THESE QUESTIONS SHOULD BE REFERRED TO THE TRAFFIC DESIGN ENGINEER OR DELEGATED REPRESENTATIVE.

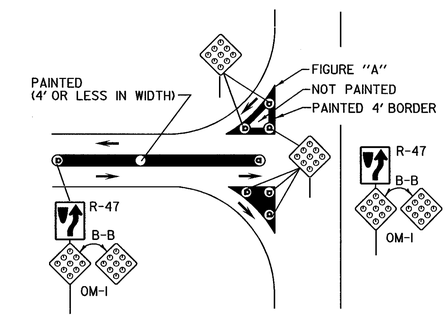

PAINTED ISLANDS

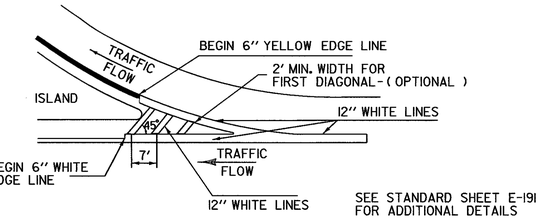

GORE MARKING DETAIL - EXIT

TRANSVERSE LINES

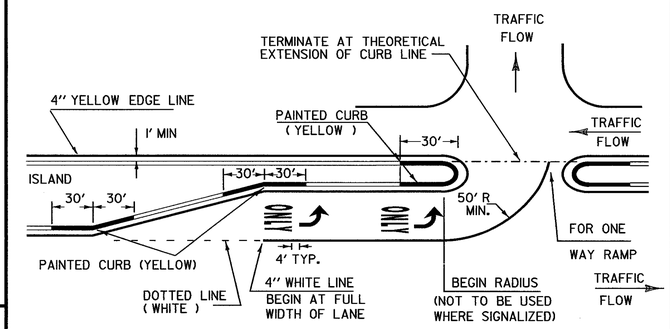

TURN LANE AND PAINTED CURB DETAIL

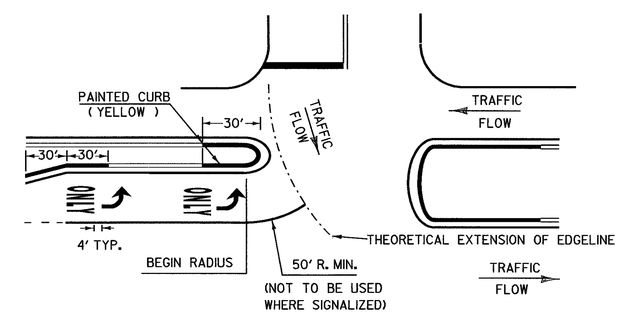

CURB PAINTING: CURB SHALL BE PAINTED ON THE ISLAND NOSE AND TO A POINT 30 FEET FROM THE END OF THE ISLAND. IN ADDITION, CURB SHALL BE PAINTED 30 FEET FROM ANY CHANGE IN CURB DIRECTION.

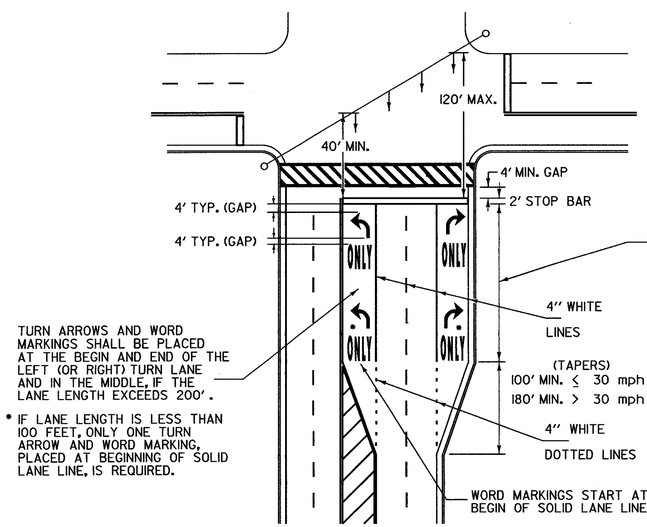

TURN ARROWS AND WORD MARKINGS SHALL BE PLACED AT THE BEGIN AND END OF THE LEFT (OR RIGHT) TURN LANE AND IN THE MIDDLE, IF THE LANE LENGTH EXCEEDS 200'.

* IF LANE LENGTH IS LESS THAN 100 FEET, ONLY ONE TURN ARROW AND WORD MARKING, PLACED AT BEGINNING OF SOLID LANE LINE, IS REQUIRED.

EXCLUSIVE TURN LANES (LEFT OR RIGHT) LANE LINES SHALL BE SOLID AND EXTEND BACK FROM THE STOP LINE TO THE POINT OF FULL LANE WIDTH OF THE TURN LANE.

FOR DESIGN OF LEFT OR RIGHT TURN LANES REFER TO VTRANS * GUIDELINE FOR DETERMINING STORAGE, TAPER AND DECELERATION LENGTHS FOR LEFT AND RIGHT-TURN LANES AT INTERSECTIONS*

TYPICAL MARKINGS FOR SIGNALIZED INTERSECTION

THIS SHEET NOT TO SCALE

OTHER STDS. REQUIRED E-191 E-193

REVISIONS AND CORRECTIONS

AUG. 18, 1995 - DATE OF ORIGINAL ISSUE
OCT. 14, 1998 - CHANGED GORE MARKING DETAIL
DEC. 28, 1998 - CHANGED GORE MARKING HATCHING TO 12" PER FHWA
OCT. 12, 2000 - CHANGED TURN LANE CRITERIA

APPROVED

DIRECTOR OF PROJECT DEVELOPMENT

ROADWAY & TRAFFIC DESIGN ENGINEER

PAVEMENT MARKING DETAILS

/traf/english/std/el92.dgn

VERMONT AGENCY OF TRANSPORTATION

STANDARD E-192

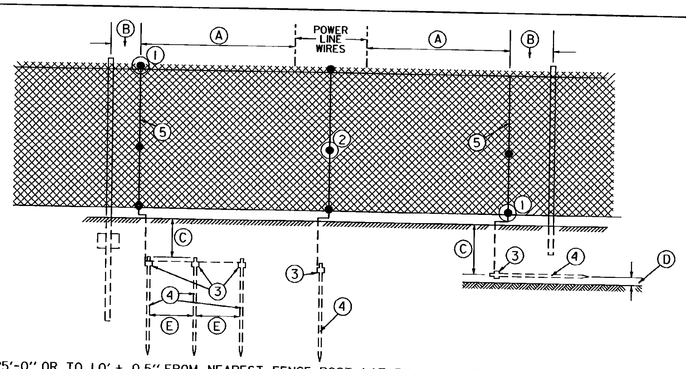

Ⓐ 25'-0" OR TO 1.0' ± 0.5" FROM NEAREST FENCE POST (AT RIGHT ANGLE TO POWER LINE)
Ⓑ MAXIMUM DISTANCE 1.0' (± 0.5")
Ⓒ MINIMUM DISTANCE 1.0' (± 1.0")
Ⓓ 2.0" (± 0.5")
Ⓔ MINIMUM DISTANCE 6.0
① CONNECTOR, } SUITABLE FOR WIRE GAUGES UTILIZED AND FOR DISSIMILAR METALS
② CONNECTOR, }
③ GROUND ROD CLAMP
④ COPPER CLAD STEEL CORE GROUND ROD 5/8" X 8'-0"
⑤ CONDUCTOR NO. 6 AWG COPPER SOFT DRAWN OR NO. 4 AWG ALUMINUM

INSTALLATION METHOD OF PROTECTIVE GROUNDING AT POWER LINE CROSSINGS

END CLAMP

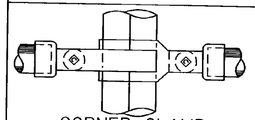

CORNER CLAMP
(ADJUSTABLE)

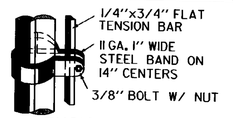

TENSION BAR BAND

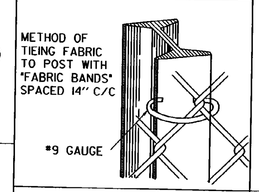

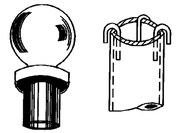

FOR END, CORNER, PULL AND GATE POSTS

BALL TOP

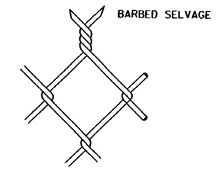

CHAIN LINK FABRIC
#9 GAUGE STEEL WIRE
2" MESH

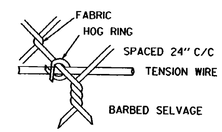

HOG RING FASTENER

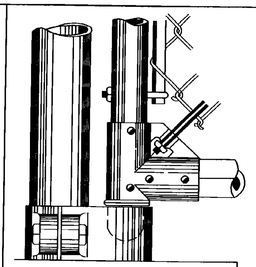

BOTTOM CORNER & HINGE FOR DRIVE GATE

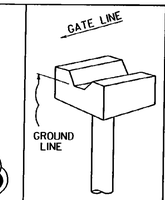

CENTER STOP FOR TWO PANEL GATES

FORK LATCH

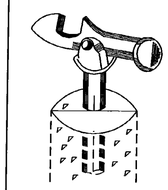

HOLDBACK TO HOLD A DRIVE GATE OPEN

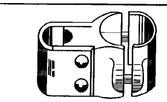

TOP HINGE

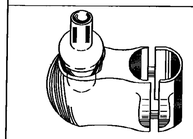

WALK GATE BOTTOM HINGE

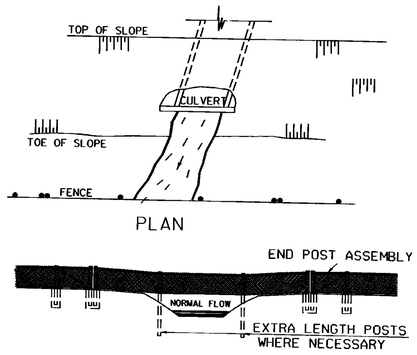

CROSSING AT STREAMS

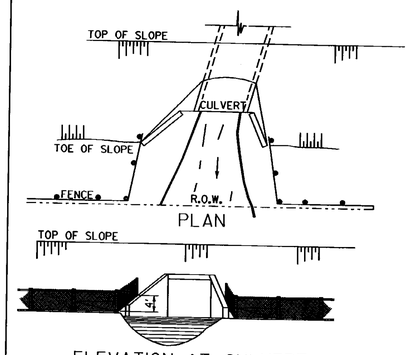

ELEVATION AT CULVERT

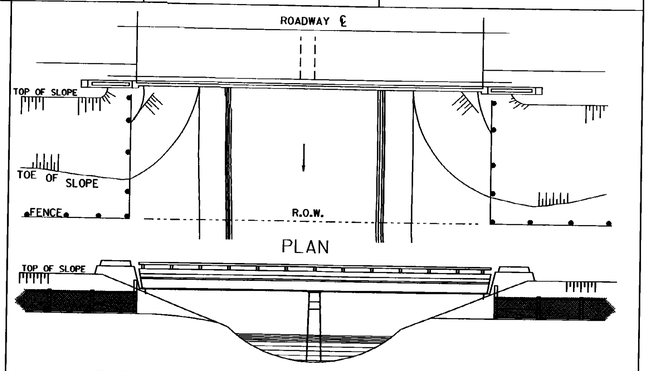

ELEVATION AT BRIDGE WITH PARAPET WALLS

GENERAL NOTES (ZINC-COATED STEEL FABRIC / ALUMINUM COATED STEEL FABRIC / VINYL COATED FABRIC.)

HEIGHT - AS NOTED ON PLANS

FABRIC - CHAIN LINK, # 9 GAUGE WIRE, WOVEN IN A 2" MESH. TOP AND BOTTOM SELVAGES TO BE BARBED. THE BOTTOM SELVAGE TO BE 2" ABOVE THE GROUND LINE. THE TOP SELVAGE TO BE 1" ABOVE THE TENSION WIRE. WHERE FENCE IS 4 FT. THE TOP EDGE SHALL BE KNUCKLED.

LINE POSTS - 2"x2 1/4" "H" COLUMN, WEIGHT 4.1 LBS. PER FOOT OR 2 3/8" O.D. PIPE, WEIGHT 3.65 LBS. PER FOOT OR APPROVED EQUAL FOR FENCE 6'-0" AND OVER IN HEIGHT. FOR FENCE LESS THAN 6'-0" IN HEIGHT, "H" COLUMNS WEIGHING 2.70 LBS. PER FOOT SHALL BE USED.

TERMINAL POSTS - END, CORNER, AND PULL POSTS, SHALL BE 2 7/8" O.D. PIPE, WEIGHT 5.79 LBS. PER FOOT FOR FENCE 6'-0" AND OVER IN HEIGHT. FOR FENCE LESS THAN 6'-0" IN HEIGHT, 2 3/8" O.D. PIPE, WEIGHING 3.65 LBS. PER FOOT, SHALL BE USED.

POST SPACING - POSTS SHALL BE SPACED EQUIDISTANT ON A MAXIMUM OF 10 FEET CENTER TO CENTER EXCEPT GATE POSTS, WHICH SHALL BE SPACED ACCORDING TO THE REQUIRED GATE OPENING.

POST FOOTINGS - ALL POSTS SHALL BE SET TO A DEPTH OF 2 FEET 10 INCHES IN A 10" DIAMETER CYLINDRICAL SHAPED HOLE 3'-6", FILLED WITH CONCRETE.

ALL FITTINGS AND HARDWARE SHALL BE SHOWN ON THIS SHEET OR EQUAL.

THE EXPOSED SURFACE OF ALL TOPS OF FOOTINGS TO BE SLOPED TO SHED WATER AND PROVIDE A NEAT APPEARANCE WHEN COMPLETED.

FABRIC TIES - FABRIC TO BE FASTENED TO POSTS AND GATE FRAMES WITH # 9 GAUGE WIRE.

TRUSS RODS - SHALL BE 3/8" DIAMETER DIAGONAL BARS WITH TURNBUCKLE.

BRACE RODS - SHALL BE 1 5/8" O.D. PIPE.

TENSION BARS - SHALL BE FLAT 1/4" x 5/4" BARS WITH SQUARE EDGES.

TENSION WIRE - SHALL BE # 9 GAUGE WIRE ATTACHED 1" BELOW TOP SELVAGE AND 2" ABOVE BOTTOM SELVAGE OF FABRIC BY MEANS OF HOG RINGS ON 24" CENTERS.

GATES - GATE FRAMES SHALL BE 1.90" O.D. PIPE ASSEMBLED BY WELDING, RIVETING OR BOLTING AND TO BE FURNISHED WITH ALL THE NECESSARY FITTINGS OVER 6'-0."

GATE FRAMES SHALL BE 1.66 " O.D. PIPE ASSEMBLED BY WELDING, RIVETING OR BOLTING AND TO BE FURNISHED WITH ALL THE NECESSARY FITTINGS 6'-0" AND LESS.

END SECTION ASSEMBLY - TO BE ERECTED ON A MAXIMUM OF 200 FEET CENTER TO CENTER.

THE WEIGHT TOLERANCE IS 5 PERCENT ABOVE AND 5 PERCENT BELOW. THE TUBULAR SIZES ARE NOMINAL.

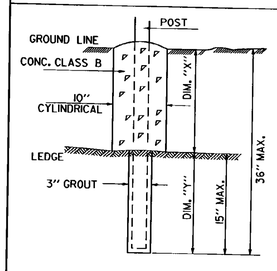

DIM. "Y" = 15" WHEN DIM. "X" VARIES BETWEEN 0" AND 24". WHEN DIM "X" EXCEEDS 24", DIM. "Y" DECREASES ACCORDINGLY

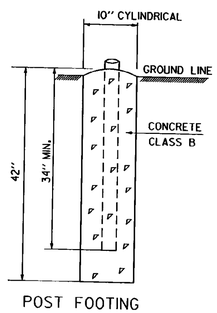

POST FOOTING

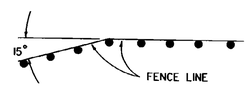

WHERE FENCE LINE HAS A CHANGE OF DIRECTION OF 15 DEGREES OR MORE, CORNER POSTS WITH BRACING SHALL BE ERECTED. WHERE ANGLE IN FENCE LINE IS LESS THAN 15 DEGREES AND EXISTING CONDITIONS REQUIRE TERMINAL POSTS, THEY SHALL BE ERECTED AS DIRECTED BY THE ENGINEER

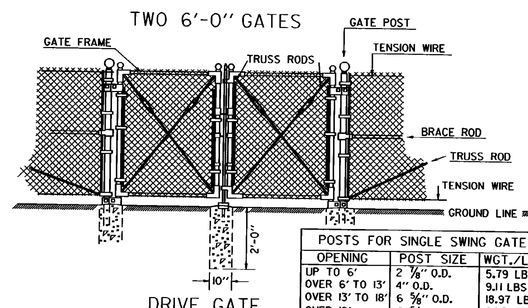

DRIVE GATE

POSTS FOR SINGLE SWING GATE		
OPENING	POST SIZE	WGT./L.F.
UP TO 6'	2 7/8" O.D.	5.79 LBS
OVER 6' TO 13'	4" O.D.	9.11 LBS
OVER 13' TO 18'	6 5/8" O.D.	18.97 LBS
OVER 18'	8 5/8" O.D.	24.70 LBS

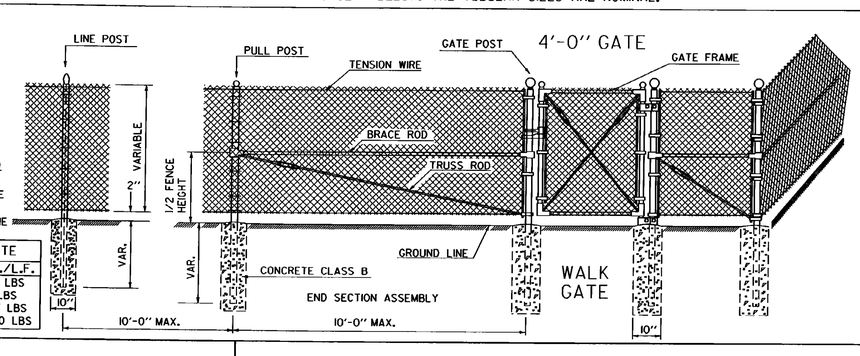

REVISIONS AND CORRECTIONS

DEC. 6, 1971- ORIGINAL APPROVAL DATE
JULY 28, 1975- VINYL COATED FABRIC ADDED
FEB. 1, 1979- CHANGE TOP RAIL TO TENSION WIRE
JUNE 1, 1994 - REISSUED, WITHOUT CHANGE, UNDER NEW SIGNATURES.

APPROVED

APPROVED FOR THIS PROJECT AND/OR DESIGN IMPLEMENTATION. FHWA FINAL APPROVAL PENDING.

Gordon R. MacAllister, P.E.
DIRECTOR OF ENGINEERING

Robert M. Murphy, P.E.
DESIGN ENGINEER

CHAIN LINK FENCE (TYPE 1)
DRIVE GATE FOR CHAIN-LINK FENCE (TYPE 1)
WALK GATE FOR CHAIN-LINK FENCE (TYPE 1)

VERMONT AGENCY OF TRANSPORTATION

STANDARD
F-2

"W" BEAM GUARDRAIL WITH STEEL POSTS

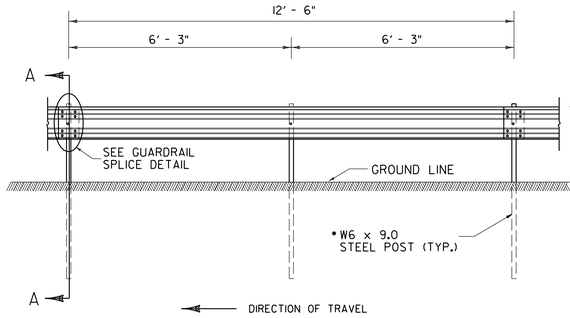

ELEVATION FROM ℄ OF ROAD

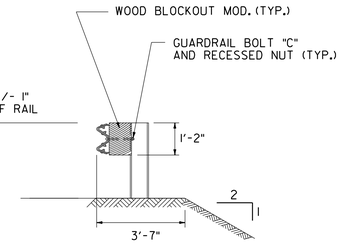

SINGLE - FACED BARRIER

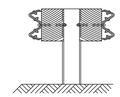

DOUBLE - FACED BARRIER

PLAN

SECTION A -A

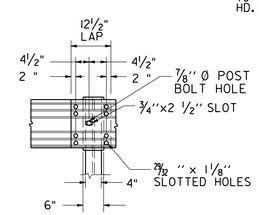

ELEVATION

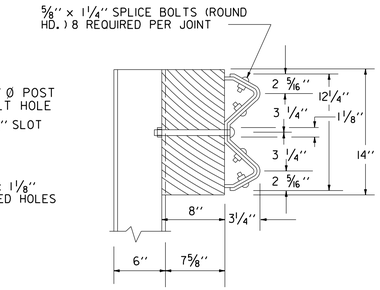

SECTION

GUARDRAIL SPLICE DETAIL

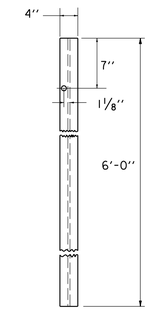

FRONT FACE
STEEL POST

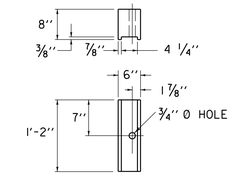

POST FACE
MODIFIED WOOD BLOCKOUT- ROUTED
6" X 8" X 1'-2"
FOR USE W/ STEEL POSTS ONLY

NOTES:

1. BLOCKS SHALL BE MADE OF TIMBER WITH A STRESS GRADE OF 1200 PSI OR MORE. TESTING SHALL BE IN ACCORDANCE WITH WEST COAST LUMBER INSPECTION BUREAU, SOUTHERN PINE INSPECTION BUREAU OR OTHER APPROPRIATE ASSOCIATION. TIMBER FOR BLOCKS SHALL BE ROUGH SAWN (UNPLANED) WITH DIMENSIONS INDICATED. THE SIZE TOLERANCE OF ROUGH SAWN BLOCKS IN THE DIRECTION OF THE BOLT HOLES SHALL BE NOT MORE THAN +/- ¼".
2. SUPPLY WOOD BLOCKS PER AASHTO M 168.
3. TREAT WITH PRESERVATIVE PER AASHTO M 133.
4. BLOCKOUTS MAY ALSO BE MADE OF APPROVED ALTERNATIVE MATERIAL.

"W" BEAM GUARDRAIL WITH WOOD POSTS

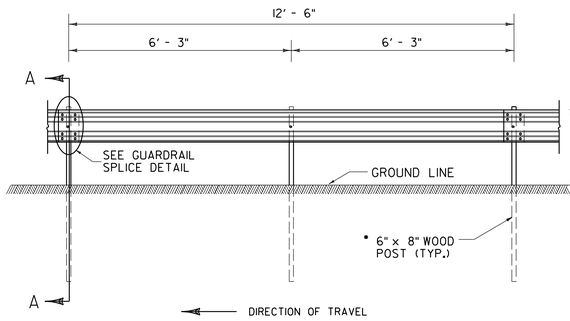

ELEVATION FROM ℄ OF ROAD

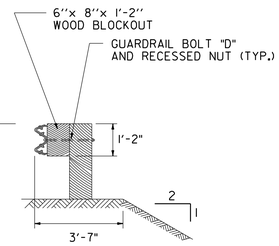

SINGLE - FACED BARRIER

• NOTE : UNLESS OTHERWISE SPECIFIED ON PLANS

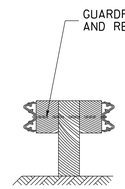

DOUBLE - FACED BARRIER

PLAN

SECTION A -A

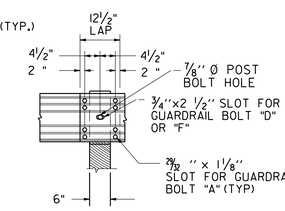

ELEVATION

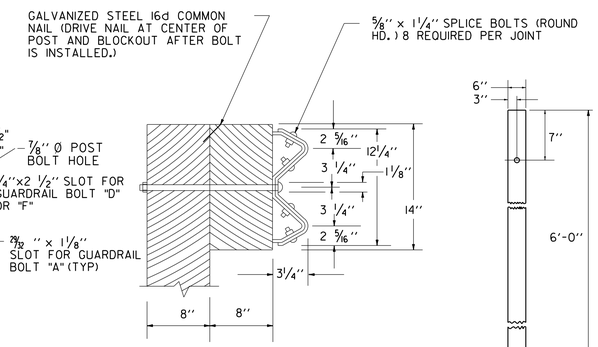

SECTION

GUARDRAIL SPLICE DETAIL

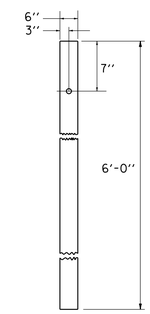

FRONT FACE
WOOD POST

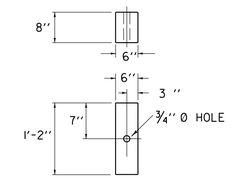

POST FACE
WOOD BLOCKOUT
6" X 8" X 1'-2"

NOTES:

1. BLOCKS SHALL BE MADE OF TIMBER WITH A STRESS GRADE OF 1200 PSI OR MORE. TESTING SHALL BE IN ACCORDANCE WITH WEST COAST LUMBER INSPECTION BUREAU, SOUTHERN PINE INSPECTION BUREAU OR OTHER APPROPRIATE ASSOCIATION. TIMBER FOR BLOCKS SHALL BE ROUGH SAWN (UNPLANED) WITH DIMENSIONS INDICATED. THE SIZE TOLERANCE OF ROUGH SAWN BLOCKS IN THE DIRECTION OF THE BOLT HOLES SHALL BE NOT MORE THAN +/- ¼".
2. SUPPLY WOOD BLOCKS PER AASHTO M 168.
3. TREAT WITH PRESERVATIVE PER AASHTO M 133.
4. BLOCKOUTS MAY ALSO BE MADE OF APPROVED ALTERNATIVE MATERIAL.

GUARDRAIL DELINEATOR

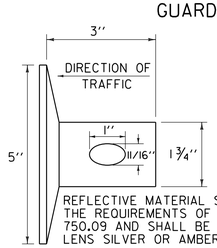

REFLECTIVE MATERIAL SHALL MEET THE REQUIREMENTS OF SUBSECTION 750.09 AND SHALL BE OF ENCAPSULATED LENS SILVER OR AMBER.

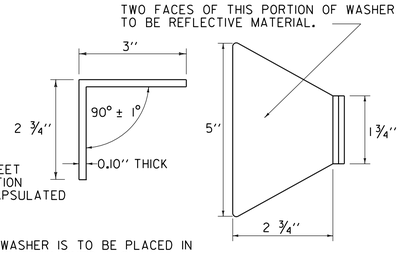

THIS REFLECTORIZED ALUMINUM WASHER IS TO BE PLACED IN VALLEY OF BEAM WHEN MOUNTING BEAM ONTO EACH FIFTH POST. WASHER SHALL MEET SPECIFICATION REQUIREMENTS FOR A.S.T.M. B-209 ALLOY 5052-H32.

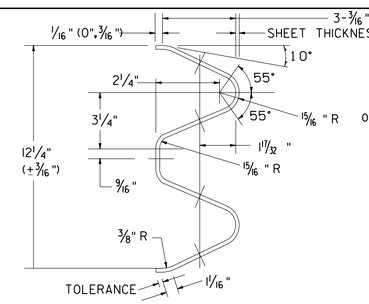

ARTBA RE-3[206'-3"=12'-6" CLASS A, TYPE 1]-73
TYPICAL GUARDRAIL SECTION

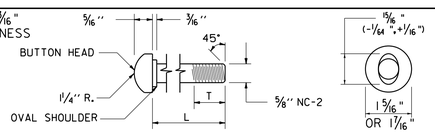

GUARDRAIL BOLT

GUARDRAIL BOLTS				FASTENER USED IN	
BOLT DES.	ARTBA REF. NO.	L	T (MIN.)	STEEL POSTS	WOOD POSTS
"A"	F-3[1¼]-76	1¼"	1"	X	X
"C"	F-3[9½]-76	9½"	1¾"	X	
"D"	F-3[18]-76	18"	2½"		X
"F"	F-3[25]-76	25"	2"		X

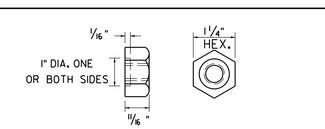

RECESSED NUT FOR GUARDRAIL BOLT

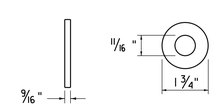

WASHER FOR ⅝" BOLTS
ARTBA F-13-73
NOTE: WASHER IS USED UNDER RECESSED NUT WHERE GUARDRAIL BOLT IS USED WITH WOOD POSTS.

GENERAL NOTES:

1. GUARDRAIL SHALL MEET THE REQUIREMENTS OF AASHTO M 180, CLASS A, TYPE 1, UNLESS OTHERWISE DESIGNATED.
2. GUARDRAIL SHALL BE SINGLE FACED UNLESS OTHERWISE DESIGNATED.
3. GUARDRAIL SECTIONS SHALL BE LAPPED IN THE DIRECTION OF TRAFFIC FLOW FOR THE LANE NEAREST THE GUARDRAIL.
4. FOR DESCRIPTION AND SPECIFICATION OF PARTS IDENTIFIED BY (ARTBA ...) AND OTHER DETAILS OF POSTS, POST ACCESSORIES, FASTENERS & RAIL ELEMENTS, SEE AASHTO-AGC-ARTBA JOINT TASK FORCE NO. 13, TITLED "A GUIDE TO STANDARDIZED HIGHWAY BARRIER HARDWARE", LATEST EDITION.
5. STANDARD STEEL BEAM TO BE 1/8" AND THE HEAVY DUTY TO BE 9/64" THICK.

OTHER STANDARD REQUIRED: G-1d

REVISIONS AND CORRECTIONS

JUNE 1, 1994 - REISSUED, WITHOUT CHANGE, UNDER NEW SIGNATURES.

JAN. 3, 2000 - UPDATED TO REFLECT METRIC STD. CHANGES

FEB. 10, 2014 - UPDATED TO REFLECT GUARDRAIL HEIGHT OF 29"; AS NOTED IN FHWA LETTER DATED MAY 17, 2010

APPROVED

HIGHWAY SAFETY & DESIGN ENGINEER

DIRECTOR OF PROGRAM DEVELOPMENT

Mark D. Richter

FEDERAL HIGHWAY ADMINISTRATION

STEEL BEAM GUARDRAIL WITH STEEL POSTS
STEEL BEAM GUARDRAIL WITH WOOD POSTS

VERMONT AGENCY OF TRANSPORTATION

STANDARD

G-1

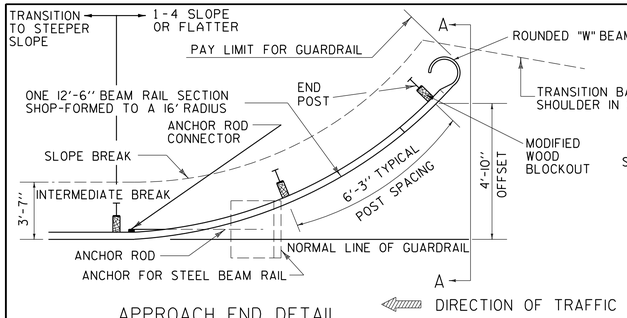

APPROACH END DETAIL

NHS APPROVED FOR USE WHERE DESIGN SPEED IS 40 OR LESS MPH

NON-NHS APPROVED FOR USE WHERE DESIGN SPEED IS 50 OR LESS MPH

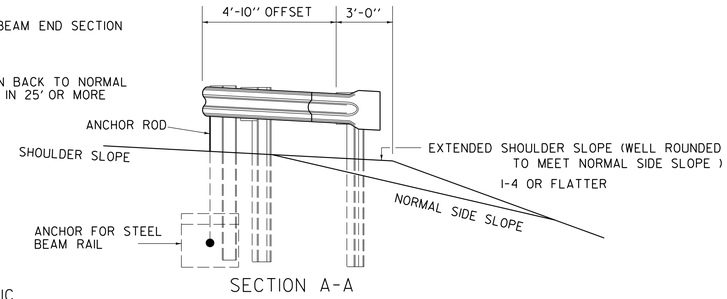

SECTION A-A

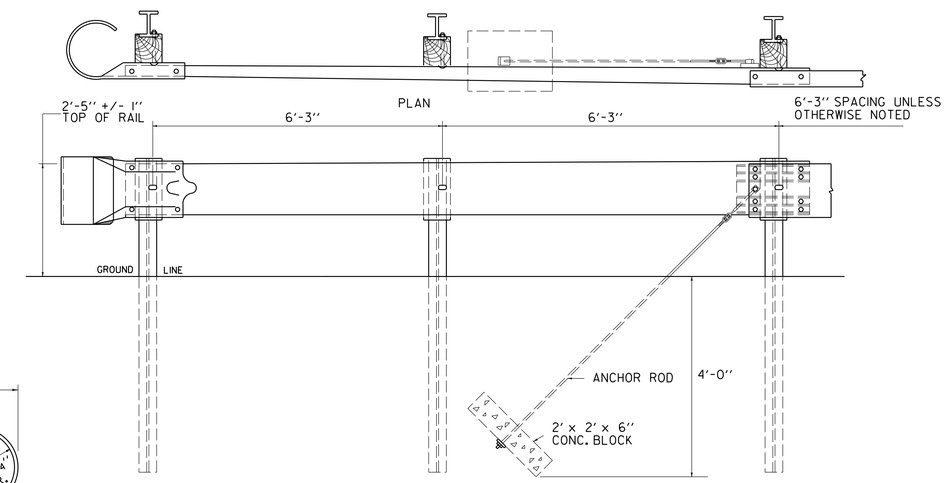

ASSEMBLY ELEVATION

TRAILING END TERMINAL FOR USE ON ONE-WAY HIGHWAYS

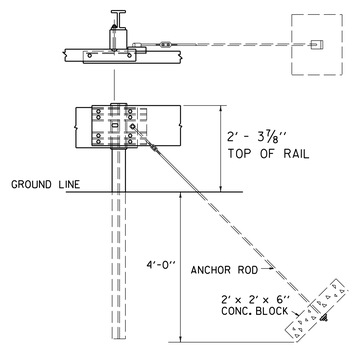

ANCHOR ROD

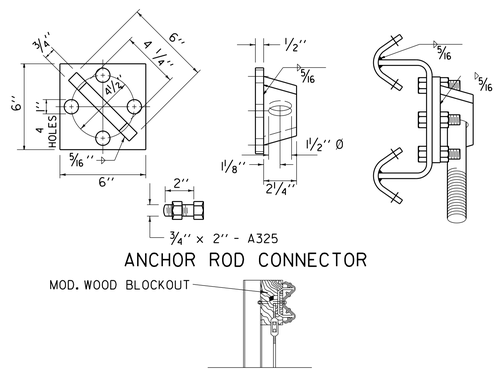

ANCHOR ROD CONNECTOR

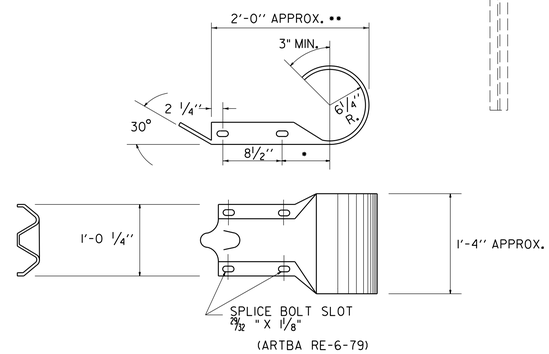

ROUNDED "W" BEAM END SECTION

• THIS DIMENSION IS 7½" IN RE-7-79. IF THE DIMENSION IS USED IN THIS PART, IT WILL GIVE AN ACCEPTABLE OVERALL LENGTH (••) OF APPROXIMATELY 2'- 11/2."

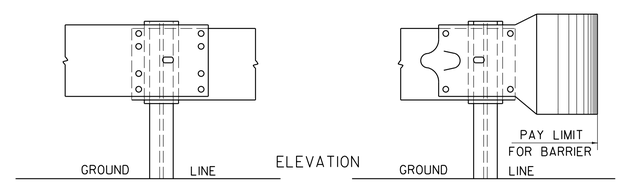

GENERAL NOTES:

1. ALL METAL PARTS SHALL BE GALVANIZED
2. ALL WOOD POSTS SHALL BE GIVEN A PRESERVATIVE TREATMENT
3. DETAILS PERTINENT TO THE STANDARD INSTALLATION OF "W" BEAM SECTIONS WILL BE FOUND ON STANDARD DRAWING G-1.
4. FOR DESCRIPTION AND SPECIFICATIONS OF PARTS IDENTIFIED BY "(ARTBA...)" AND OTHER DETAILS OF POSTS, POST ACCESSORIES, FASTENERS AND RAIL ELEMENTS, SEE AASHTO-AGC-ARTBA JOINT TASK FORCE NO. 13, TITLED "A GUIDE TO STANDARDIZED HIGHWAY BARRIER HARDWARE", LATEST EDITION.
5. THE TRANSITION FROM THE APPROACH END TO THE STANDARD STEEL BEAM GUARDRAIL SHALL BE 25'-0" UNLESS OTHERWISE SPECIFIED.
6. WHEN STANDARD STEEL BEAM CONNECTS TO BRIDGE APPROACH RAIL OF A DIFFERENT HEIGHT THE LENGTH NEEDED TO TRANSITION THE HEIGHT OF STANDARD STEEL BEAM TO MATCH THE BRIDGE APPROACH RAIL SHALL BE 25'-0" UNLESS OTHERWISE SPECIFIED.
7. WHEN STANDARD STEEL BEAM CONNECTS TO A MANUFACTURED TERMNAL SECTION OF A DIFFERENT HEIGHT THE LENGTH NEEDED TO TRANSITION THE HEIGHT OF STANDARD STEEL BEAM TO MATCH THE MANUFACTURED TERMINAL SECTION SHALL BE 25'-0" UNLESS OTHERWISE SPECIFIED.

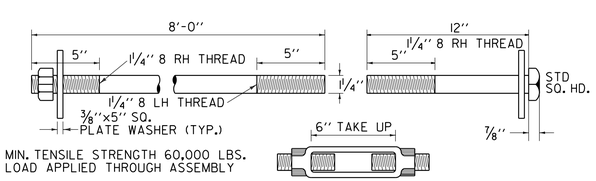

MIN. TENSILE STRENGTH 60,000 LBS. LOAD APPLIED THROUGH ASSEMBLY

TURNBUCKLE

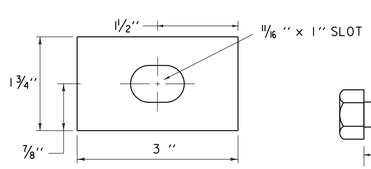

RECTANGULAR GUARDRAIL PLATE WASHER

(ARTBA F-12-73)

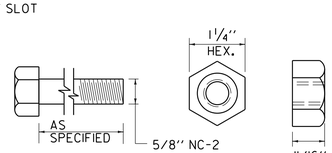

5/8" HEX NUT AND BOLT "F"

(ARTBA F-8-76)

FASTENER DETAILS

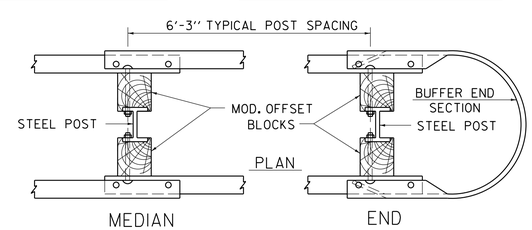

STEEL BEAM MEDIAN BARRIER

NOTE: TO BE USED OUTSIDE CLEAR ZONE ONLY.

OTHER STANDARD REQUIRED: G-1

REVISIONS AND CORRECTIONS

JUNE 1, 1994 - REISSUED, WITHOUT CHANGE, UNDER NEW SIGNATURES.

JAN. 3, 2000 - UPDATED TO REFLECT METRIC STD. CHANGES

FEB. 10, 2014 - UPDATED TO REFLECT GUARDRAIL HEIGHT OF 29"; AS NOTED IN FHWA LETTER DATED MAY 17, 2010

APPROVED

HIGHWAY SAFETY & DESIGN ENGINEER

DIRECTOR OF PROGRAM DEVELOPMENT

Mark D. Richter

FEDERAL HIGHWAY ADMINISTRATION

STEEL BEAM GUARDRAIL APPROACH END TERMINAL
STEEL BEAM GUARDRAIL TRAILING END TERMINAL
ANCHOR FOR STEEL BEAM GUARDRAIL
STEEL BEAM MEDIAN BARRIER

VERMONT AGENCY OF TRANSPORTATION

STANDARD

G-1d

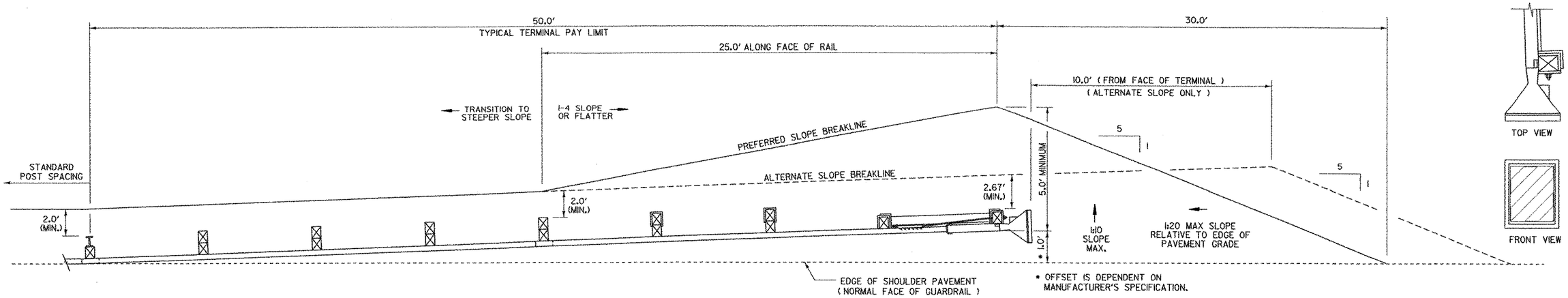

TANGENTIAL TERMINAL

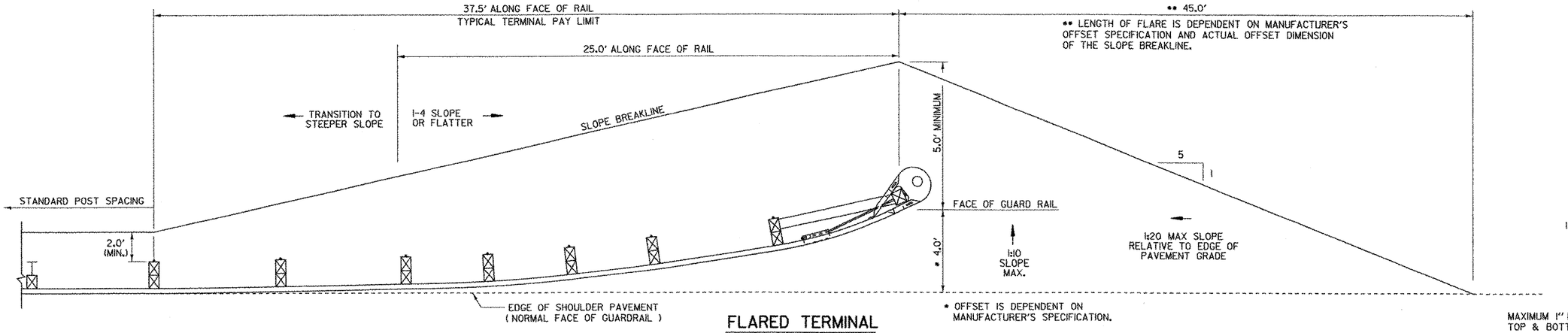

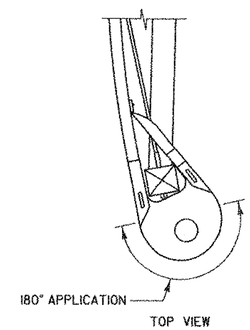

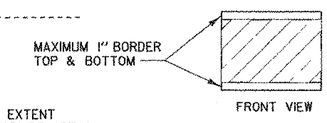

FLARED TERMINAL

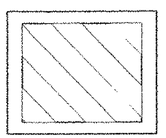

ORIENTATION OF REFLECTIVE SHEETING FOR LEFT SIDE OF ROAD HAZARD.

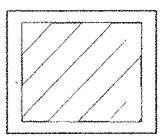

ORIENTATION OF REFLECTIVE SHEETING FOR RIGHT SIDE OF ROAD HAZARD.

GENERAL NOTES

1. THE AREA IMMEDIATELY BEHIND AND BEYOND THE TERMINAL SHOULD BE REASONABLY TRAVERSABLE AND FREE FROM FIXED-OBJECT HAZARDS TO THE EXTENT PRACTICABLE. IF A CLEAR RUNOUT PATH IS NOT ATTAINABLE, THIS AREA SHOULD AT LEAST BE SIMILAR IN CHARACTER TO UPSTREAM/UNSHIELDED ROADSIDE AREAS.

2. REFLECTIVE SHEETING SHALL BE PLACED ON THE TERMINAL END OF ALL TANGENT END TERMINALS. THIS SHALL BE OBJECT MARKER MATERIAL (TYPE 3 - STRIPED MARKER OM-3L AND OM-3R) CONSISTING OF A SQUARE OR RECTANGULAR SHAPE WITH ALTERNATING BLACK AND RETROREFLECTIVE YELLOW STRIPES SLOPING DOWNWARD AT AN ANGLE OF 45 DEGREES TOWARDS TRAFFIC. THE MINIMUM WIDTH OF THE YELLOW STRIPE SHALL BE 3 INCHES. THE DIMENSIONS OF THE MARKER SHALL EXTEND FOR THE FULL WIDTH OF THE FACE PLATE ON THE TERMINAL HEAD AND BE SUFFICIENT IN HEIGHT (DEPENDENT ON THE TYPE OF END TERMINAL AND HEAD SIZE). REFLECTIVE MATERIAL SHALL MEET THE REQUIREMENTS OF SUBSECTION 750.08 (B)(3) TYPE III OR HIGHER (AASHTO M 268 (ASTM 4956)). THE COST SHALL BE INCLUDED IN THE COST OF THE END TERMINAL.

3. REFLECTIVE SHEETING SHALL BE PLACED ON THE END OF FLARED TERMINALS WHICH ARE LOCATED 6 FEET OR LESS FROM THE EDGE OF SHOULDER (NORMAL FACE OF GUARDRAIL. THIS SHALL BE THE SAME OBJECT MARKER MATERIAL SPECIFIED IN NOTE 2. THE COST OF THE REFLECTIVE SHEETING SHALL BE INCLUDED IN THE COST OF THE END TERMINAL.

4. FOR THE FLARED TERMINAL, WITH AN OFFSET BETWEEN 4 FEET AND 6 FEET FROM THE NORMAL FACE OF GUARDRAIL, THE FOLLOWING SHALL PERTAIN; A REFLECTIVE BUTTON, MOUNTED ON A STANDARD DELINEATOR POST, SHALL BE INSTALLED AT THE NORMAL FACE OF GUARDRAIL, DIRECTLY OPPOSITE THE LEAD END OF THE TERMINAL. THE BUTTON SHALL BE WHITE FOR THE RIGHT SIDE OF THE ROAD AND YELLOW FOR THE LEFT SIDE. ANY DELINEATORS INSTALLED SHALL BE PAID FOR BY THE APPROPRIATE PAY ITEMS.

NOT TO SCALE

REVISIONS AND CORRECTIONS

OCT. 21, 1998 ORIGINAL APPROVAL

NOV. 15, 2002 MODIFIED SLOPE BREAKLINE, REFLECTIVE SHEETING ADDED

APPROVED

DIRECTOR OF PROJECT DEVELOPMENT

ROADWAY DESIGN ENGINEER

FEDERAL HIGHWAY ADMINISTRATION

GENERIC PLANS FOR GUARDRAIL END TERMINALS

VERMONT AGENCY OF TRANSPORTATION

STANDARD

G-19

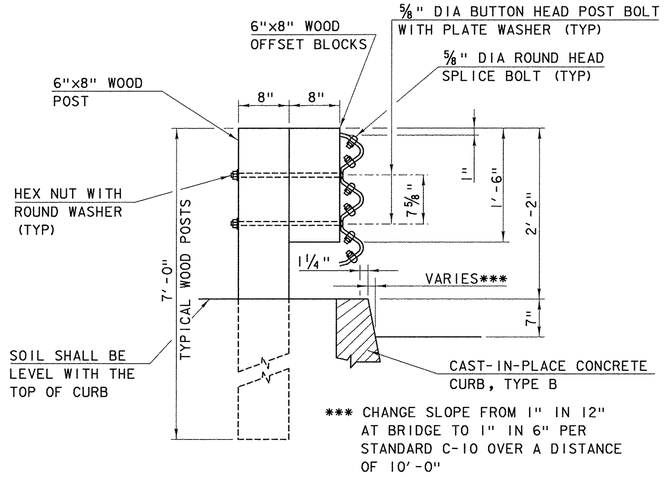

WOOD POST AND THRIE-BEAM RAIL ASSEMBLY

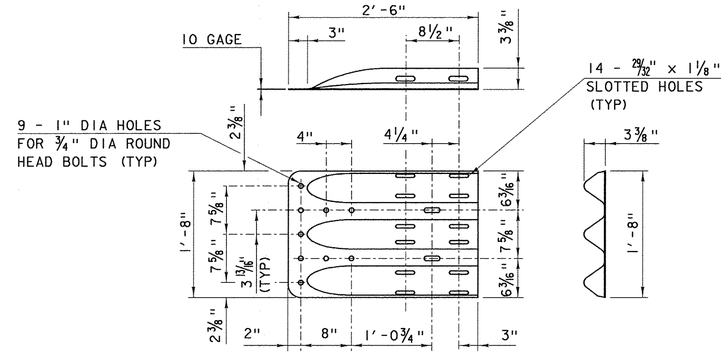

THRIE-BEAM TERMINAL CONNECTOR (HM-TF-13/RE-67)

NOTES

1. DELINEATOR DEVICES SHALL BE INSTALLED PER BRIDGE RAIL AND OR GUARDRAIL STANDARD REQUIREMENTS.
2. ON BRIDGES WITH A SIDEWALK, DELINEATORS ARE NOT TO BE INSTALLED ON THE SIDEWALK SIDE OF THE BRIDGE.

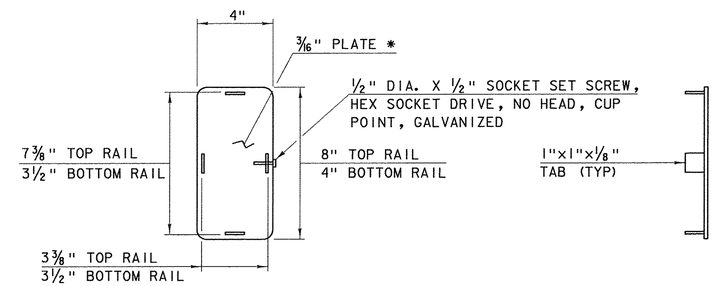

END CAP DETAIL

* ROUND CORNERS 1/2" RADIUS (TYP)

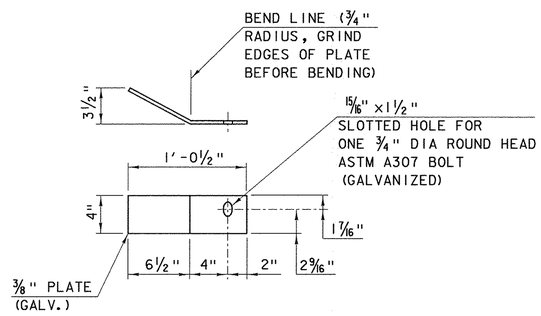

DEFLECTOR PLATE DETAIL

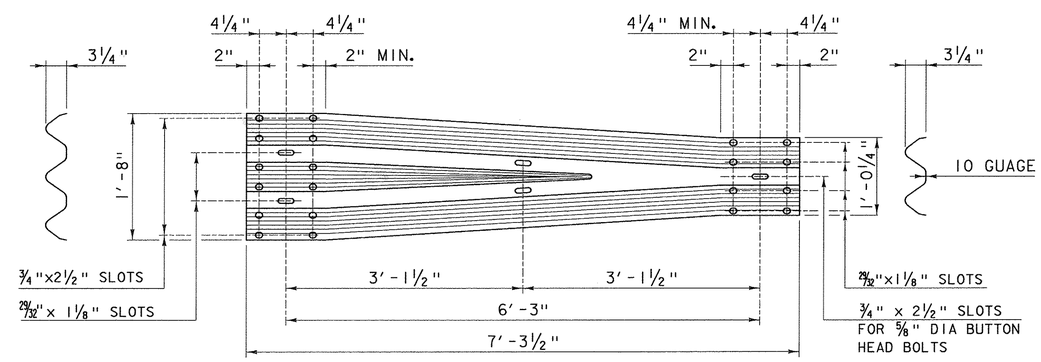

THRIE-BEAM TO STANDARD STEEL BEAM TRANSITION SECTION (HM-TF-13/RE-69)

OTHER STDS. REQUIRED: **C-10**

REVISIONS AND CORRECTIONS

DECEMBER 14, 2009 - ORIGINAL APPROVAL DATE
APRIL 23, 2012 - GENERAL UPDATE 2012

APPROVED

Wm. Michael Hedges
STRUCTURES ENGINEER

Richard Ethier
DIRECTOR OF PROGRAM DEVELOPMENT

Mark D. Richter
FEDERAL HIGHWAY ADMINISTRATION

THRIE BEAM TO STANDARD STEEL BEAM TRANSITION SECTION

VERMONT AGENCY OF TRANSPORTATION

STANDARD
S-363

1. TRAFFIC CONTROL DEVICES NOT DETAILED IN THE VERMONT AGENCY OF TRANSPORTATION (VAOT) ''STANDARD DRAWINGS'' OR THE PROJECT PLANS SHALL BE IN ACCORDANCE WITH THE "MANUAL ON TRAFFIC CONTROL DEVICES" (MUTCD) AND THE ''STANDARD HIGHWAY SIGNS AND MARKINGS'' BOOK (SHSM) PUBLISHED BY THE FEDERAL HIGHWAY ADMINISTRATION (FHWA).

2. CONSTRUCTION SIGNS SHALL BE ERECTED BEFORE THE START OF ANY WORK AND SHALL BE COVERED UNTIL WORK COMMENCES, DURING PERIODS OF INACTIVITY OR UPON COMPLETION OF THE WORK. EACH SIGN SHALL BE ERECTED IN A NEAT AND WORKMANLIKE MANNER.

3. CONSTRUCTION SIGN COVERS SHALL CONSIST OF A PANEL, PAINTED FLAT BLACK, THE SAME SIZE AS THE SIGN IT COVERS. THE PANEL SHALL BE OF WOOD, PLYWOOD, HARDBOARD OR ANY MATERIAL SATISFACTORY TO THE ENGINEER. NO MATERIAL WILL BE APPROVED THAT WILL DETERIORATE BY EXPOSURE TO THE WEATHER DURING THE PROJECT. MOUNTING OF THE PANEL SHALL BE DONE IN SUCH A WAY AS NOT TO DAMAGE THE SIGN FACE MATERIAL.

4. SIGNS SHALL BE MAINTAINED IN A CLEAN AND LEGIBLE CONDITION SATISFACTORY TO THE ENGINEER. THEY SHALL BE KEPT PLUMB AND LEVEL, AND ALWAYS PRESENT A NEAT APPEARANCE. DAMAGED, DEFACED OR DIRTY SIGNS SHALL BE REPAIRED, CLEANED OR REPLACED AS ORDERED BY THE ENGINEER.

5. NO CROSS-BRACING OR BACK-BRACING TO KEEP POSTS PLUMB WILL BE ALLOWED. CONCRETE FOUNDATIONS, COLLARS OR SOIL BEARING PLATES ARE NOT PERMITTED. CONSTRUCTION SIGNS SHALL BE PLACED ON TWO POSTS.

6. CONSTRUCTION SIGNS INSTALLED ON POSTS SHALL BE SET SECURELY IN THE GROUND. THE BOTTOM OF A SIGN SHALL BE AT LEAST FIVE FEET ABOVE THE EDGE OF PAVEMENT AND THE NEAREST EDGE OF A SIGN SHALL BE AT LEAST SIX FEET OUTSIDE THE SHOULDER POINT, FOUR FEET OUTSIDE GUARDRAIL, OR TWO FEET OUTSIDE CURBING OR SIDEWALK. THE INSTALLATION OF SIGNS SHALL BE SUBJECT TO APPROVAL OF THE ENGINEER. IN URBAN AREAS, THE BOTTOM OF THE SIGN SHALL BE AT LEAST SEVEN FEET ABOVE THE SIDEWALK OR EDGE OF PAVEMENT, WHICHEVER IS HIGHER.

7. PORTABLE SIGNS SHALL BE PLACED ON THE EDGE OF ROADWAY AND A MINIMUM OF ONE FOOT ABOVE THE TRAVELED WAY. ALL VEGETATION THAT INTERFERES WITH VISIBILITY OF THE SIGNS SHALL BE REMOVED. WHEN PLACED BEHIND GUARDRAIL, THE BOTTOM OF THE SIGN FACE SHALL BE ABOVE THE TOP OF THE GUARDRAIL.

8. SIGNS SHALL BE REMOVED UPON COMPLETION OF THE WORK AT THE DISCRETION OF THE ENGINEER.

9. ROLL UP CONSTRUCTION SIGNS SHALL HAVE RETROREFLECTIVE SHEETING EQUAL TO OR EXCEEDING THE "AMERICAN ASSOCIATION OF STATE HIGHWAY AND TRANSPORTATION OFFICIALS" (AASHTO) M 268 ["AMERICAN SOCIETY FOR TESTING AND MATERIALS" (ASTM) D 4956] TYPE VI AND TYPE VII UNLESS OTHERWISE NOTED.

10. SOLID SUBSTRATE CONSTRUCTION SIGNS SHALL HAVE RETROREFLECTIVE SHEETING EQUAL TO OR EXCEEDING THE "AMERICAN ASSOCIATION OF STATE HIGHWAY AND TRANSPORTATION OFFICIALS" (AASHTO) M 268 ["AMERICAN SOCIETY FOR TESTING AND MATERIALS" (ASTM) D 4956] TYPE VIII OR IX REQUIREMENTS UNLESS OTHERWISE NOTED.

11. WHERE CONSTRUCTION SIGN INSTALLATIONS ARE NOT PROTECTED BY GUARDRAIL OR OTHER APPROVED TRAFFIC BARRIERS, ALL SIGN STANDS AND POST INSTALLATIONS SHALL MEET "NATIONAL COOPERATIVE HIGHWAY RESEARCH PROGRAM" (NCHRP) REPORT 350 OR THE AASHTO "MANUAL FOR ASSESSING SAFETY HARDWARE" (MASH). THE APPROPRIATE RESOURCE SHALL BE DETERMINED AS DESCRIBED IN THE MASH PUBLICATION. NO SIGN POSTS SHALL EXTEND OVER THE TOP OF THE SIGN INSTALLED ON SAID POSTS. WHEN ANCHORS ARE INSTALLED, STUBS SHALL NOT BE GREATER THAN FOUR INCHES ABOVE EXISTING GROUND.

12. ROADWAY AND SHOULDER WIDTHS DEPICTED ON THE STANDARD DRAWINGS MAY VARY.

13. THESE STANDARD DRAWINGS ARE INTENDED TO SERVE AS VTRANS STANDARD OPERATING PROCEDURE. IT IS NOTED THAT COMPONENT PARTS OF A TEMPORARY TRAFFIC CONTROL WORK ZONE MAY BE MODIFIED DUE TO FIELD CONDITIONS, AT THE DISCRETION OF THE ENGINEER.

OTHER STDS. REQUIRED: **NONE**

REVISIONS AND CORRECTIONS

AUG. 6, 2012 - ORIGINAL APPROVAL DATE

APPROVED

HIGHWAY SAFETY & DESIGN ENGINEER

DIRECTOR OF PROGRAM DEVELOPMENT

Mark D. Richter

FEDERAL HIGHWAY ADMINISTRATION

TRAFFIC CONTROL GENERAL NOTES

VERMONT AGENCY OF TRANSPORTATION

STANDARD

T-1

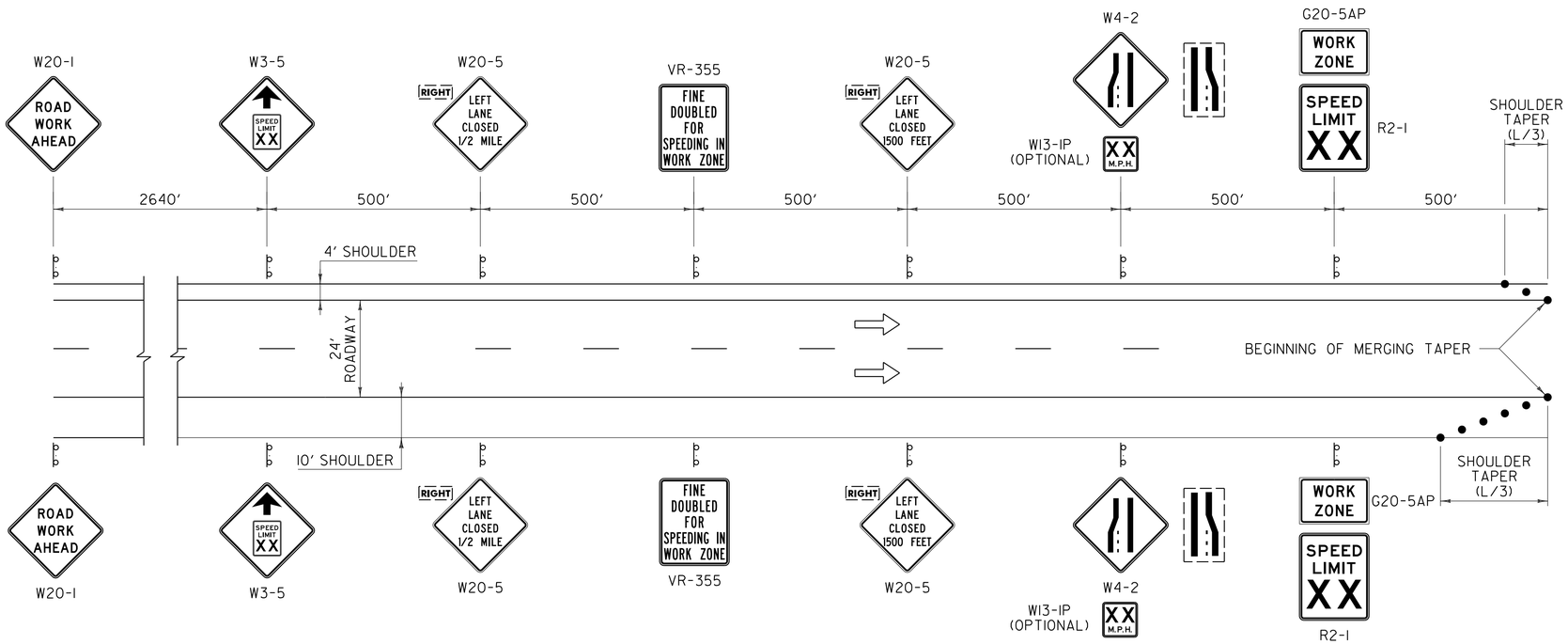

GENERAL NOTES:

1. IF APPLICABLE, THE CONTRACTOR SHALL HAVE SIGNS FOR CLOSURE OF RIGHT AND LEFT LANES ON PROJECT BEFORE WORK COMMENCES.
2. THE "SPEED LIMIT XX" (R2-1) AND "SPEED REDUCTION WARNING" (W3-5) SIGNS SHALL ONLY BE USED IF A TEMPORARY SPEED LIMIT CERTIFICATE HAS BEEN APPROVED. THE "SPEED LIMIT XX" (R2-1) AND OTHER RELATED SIGNS SHALL BE REMOVED OR COVERED WHEN WORK IS NOT IN PROGRESS AND ROADWAY IS NOT RESTRICTED.
3. "FINE DOUBLED FOR SPEEDING IN WORK ZONE" (VR-355) SHALL ONLY BE USED IF TEMPORARY SPEED LIMIT CERTIFICATE HAS BEEN APPROVED.
4. EXISTING SPEED LIMIT SIGNS SHALL BE COVERED WHEN TEMPORARY SPEED LIMIT SIGNS ARE POSTED.
5. FOR SHORT TERM PROJECTS (THREE CONSECUTIVE DAYS OR LESS) WITH NO OFFICIAL TEMPORARY SPEED LIMIT, THE "SPEED LIMIT XX" (R2-1) AND "SPEED REDUCTION WARNING" (W3-5) SIGNS MAY BE SUBSTITUTED WITH ADVISORY SPEED PLAQUES (W13-IP) MOUNTED AS SUPPLEMENTAL SIGNS BELOW THE "LANE ENDS" (W4-2) SIGNS.
6. FOR AN ANTICIPATED LONG TERM CLOSURE (GREATER THAN THREE CONSECUTIVE DAYS) WITH A NON-MOVING OPERATION, ALL SIGNS SHALL BE POST MOUNTED.
7. FOR A LONG TERM CLOSURE WITH A MOVING OPERATION, THE "ROAD WORK AHEAD" (W20-1) SIGN SHALL BE POST MOUNTED. THE REMAINING SIGNS MAY BE PORTABLE AND SHALL MOVE AS THE WORK AREA CHANGES.
8. FOR A SHORT TERM PROJECT (THREE CONSECUTIVE DAYS OR LESS), SIGNS MAY BE POST MOUNTED OR PORTABLE.
9. THE "SPEED LIMIT XX" (R2-1) SOLID SUBSTRATE SIGNS SHALL HAVE RETROREFLECTIVE SHEETING EQUAL TO OR EXCEEDING AASHTO M 268 [ASTM D 4956] TYPE III.

OTHER STDS. REQUIRED: **T-1, T-12, T-31**

LEGEND

⇨ FLOW OF TRAFFIC

● RETROREFLECTIVE PLASTIC DRUM

REVISIONS AND CORRECTIONS

AUG. 6, 2012 - ORIGINAL APPROVAL DATE

APPROVED

HIGHWAY SAFETY & DESIGN ENGINEER

DIRECTOR OF PROGRAM DEVELOPMENT

Mark D. Richter

FEDERAL HIGHWAY ADMINISTRATION

CONSTRUCTION APPROACH SIGNING DIVIDED HIGHWAY ONE LANE CLOSED

VERMONT AGENCY OF TRANSPORTATION

STANDARD

T-11

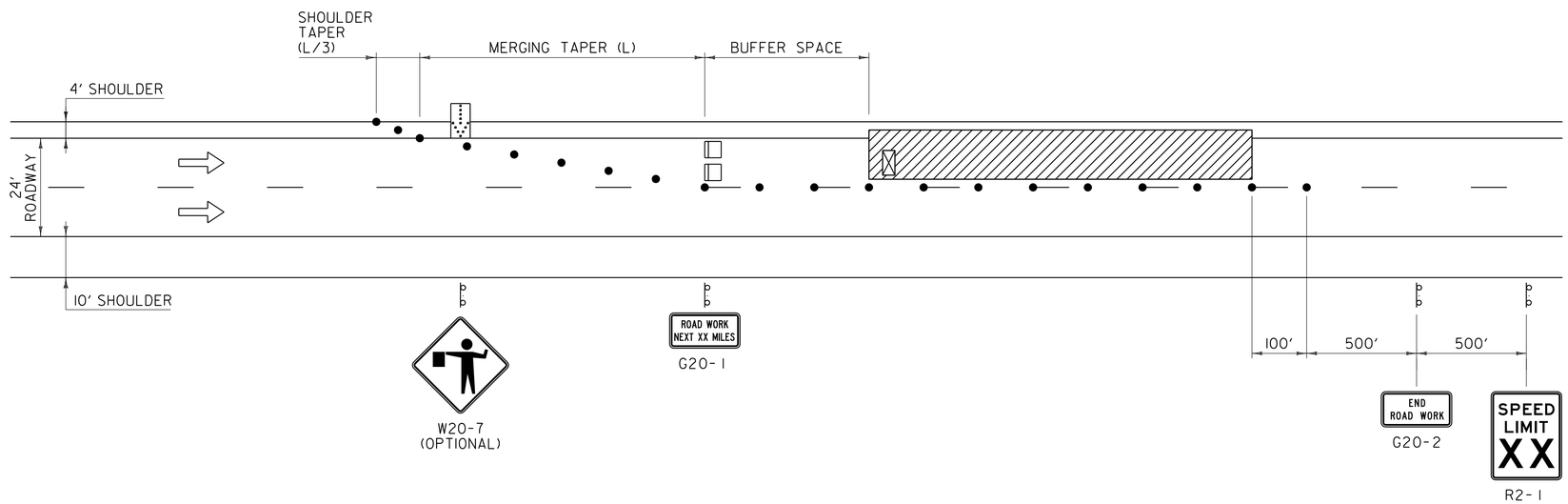

LEGEND

- FLOW OF TRAFFIC
- RETROREFLECTIVE PLASTIC DRUM
- FLASHING ARROW PANEL
- TYPE III BARRICADE
- WORK AREA
- TRUCK/TRAILER MOUNTED ATTENUATOR (OPTIONAL)

GENERAL NOTES:

1. FOR LONG TERM CLOSURES, DASHED LANE LINE REMOVAL SHALL BEGIN 750 FEET IN ADVANCE OF THE BEGINNING OF THE SHOULDER TAPER AND TEMPORARY PAVEMENT MARKINGS SHALL BE PLACED ALONG THE CHANNELIZING DEVICES.
2. CHANNELIZING DEVICES OTHER THAN RETROREFLECTIVE PLASTIC DRUMS SHALL BE ALLOWED ALONG THE BUFFER SPACE AND WORK AREA. THE TYPE OF DEVICE SHALL BE CONSISTENT THROUGHOUT THE BUFFER SPACE AND WORK AREA AND SHALL REMAIN STABLE WHILE UNATTENDED.
3. THE NUMBER OF CHANNELIZING DEVICES, TYPE III BARRICADE AND OTHER TRAFFIC CONTROL DEVICES SHOWN ARE FOR ILLUSTRATIVE PURPOSES ONLY. THE ACTUAL NUMBER REQUIRED ARE TO BE DETERMINED BASED ON INDIVIDUAL DETOUR CONDITIONS (TAPERS, SPEED LIMITS, LENGTH OF DETOUR, CURVE, ETC.). WARNING LIGHTS SHALL NOT BE USED ON CHANNELIZING DEVICES.
4. PLACE LAST CHANNELIZING DEVICE 100 FEET BEYOND THE ANTICIPATED WORK ZONE TERMINAL POINT EACH DAY.
5. THE ARROW PANEL SHALL BE PLACED ON THE SHOULDER OF THE ROADWAY, AS CLOSE AS PRACTICAL TO THE BEGINNING OF THE MERGING TAPER.
6. THE "ROAD WORK NEXT XX MILES" SIGN (G20-1) SHALL BE INSTALLED IN ADVANCE OF TEMPORARY TRAFFIC CONTROL ZONES THAT ARE MORE THAN TWO MILES IN LENGTH, OR AS DIRECTED BY THE ENGINEER. DISTANCES SHALL BE STATED TO THE NEAREST WHOLE MILE.
7. WHEN FLAGGER IS PRESENT THE "FLAGGER" (W20-7) SIGN SHALL BE USED; TO BE REMOVED IF FLAGGING STOPS FOR 15 MINUTES OR MORE.
8. "SPEED LIMIT XX" (R2-1) SIGN TO BE USED IF A TEMPORARY SPEED ZONE IS IN PLACE.
9. TAPER RATES ARE DETERMINED USING THE FOLLOWING EQUATION:
   $L = WS$ FOR POSTED SPEEDS OF 45 MPH OR GREATER.
   $L = WS/60^2$ FOR POSTED SPEEDS OF 40 MPH OR LESS.
   L = MINIMUM LENGTH OF TAPER
   W = WIDTH OF OFFSET IN FEET (TYPICAL)
   S = POSTED SPEED IN MPH
10. TAPER LENGTHS FOR SHOULDER WIDTHS OTHER THAN 10 FEET NEED TO BE CALCULATED.

POSTED SPEED (MPH)	TAPER LENGTHS (FT)		TANGENT W=12 FT (L/2)	BARRIER FLARE RATE (MINIMUM)	MINIMUM BUFFER SPACE LENGTH (FT)	MAXIMUM CHANNELIZING DEVICE SPACING (FT)	
	SHOULDER W=10 FT (L/3)	MERGING 12 FT LANE (L)				TAPER (S)	TANGENT (2S)
≤ 40	90	320	160	1:9	305	40	80
45	150	540	270	1:9	360	45	90
50	170	600	300	1:11	425	50	100
55	185	660	330	1:13	495	55	110
60	200	720	360	1:13	570	60	120
65	215	780	390	1:13	645	65	130

OTHER STDS. REQUIRED: **T-1, T-11**

REVISIONS AND CORRECTIONS

AUG. 6, 2012 - ORIGINAL APPROVAL DATE

APPROVED

HIGHWAY SAFETY & DESIGN ENGINEER

DIRECTOR OF PROGRAM DEVELOPMENT

Mark D. Richter

FEDERAL HIGHWAY ADMINISTRATION

TRAFFIC CONTROL DIVIDED HIGHWAY ONE LANE CLOSED

VERMONT AGENCY OF TRANSPORTATION

STANDARD

T-12

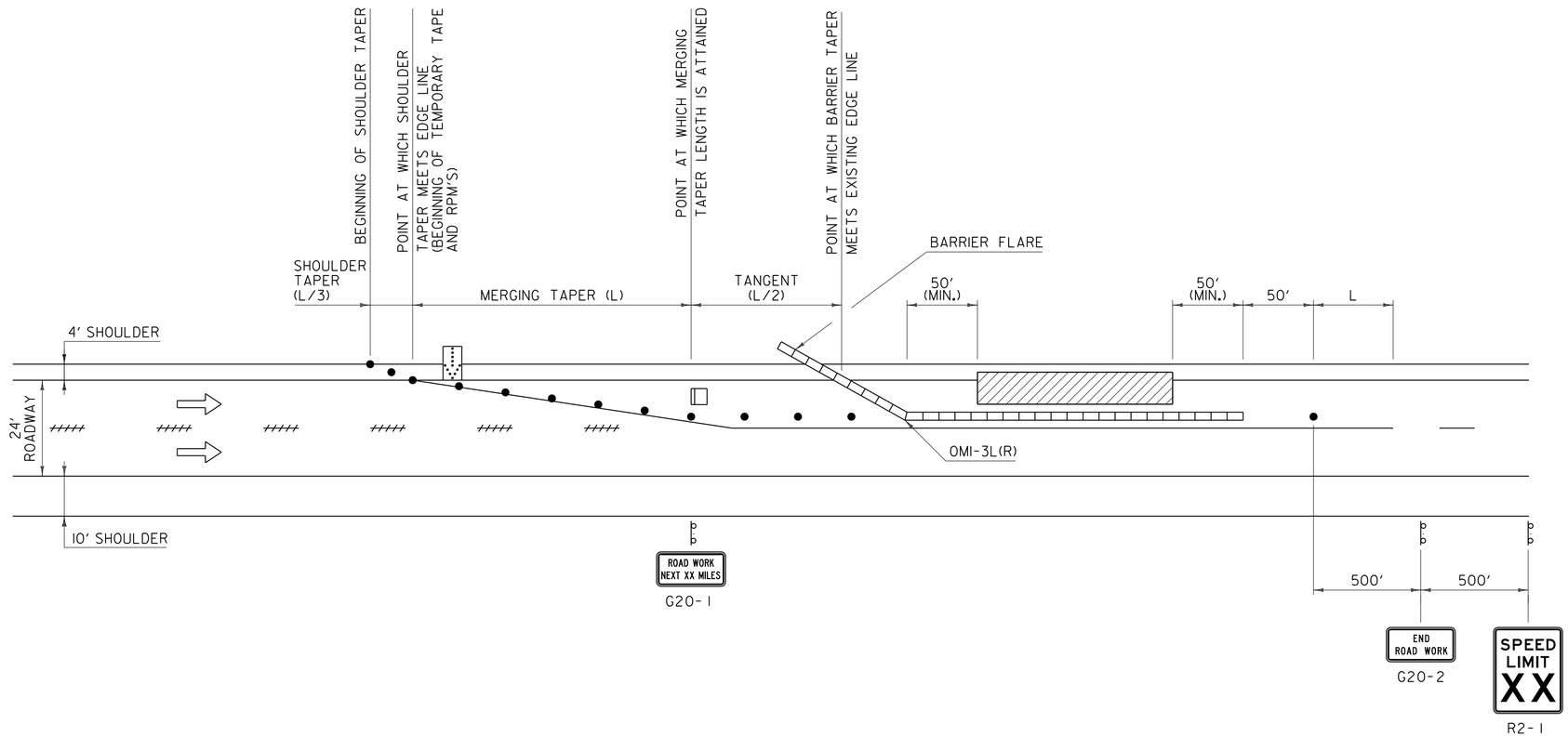

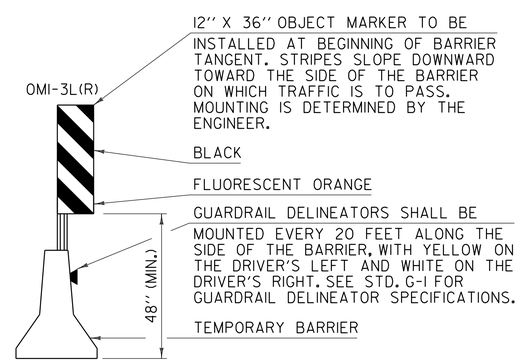

GENERAL NOTES:

1. THE EXISTING TRAVEL LANE WIDTH SHOULD BE MAINTAINED IF POSSIBLE.
2. TEMPORARY TAPE EDGE LINES SHALL BE APPLIED AND SHALL MAINTAIN A ONE FOOT MINIMUM DISTANCE FROM THE BARRIER WITH TWO FEET BEING DESIRABLE.
3. RAISED PAVEMENT MARKINGS (RPM'S) SHALL BE PLACED TO THE OUTSIDE OF THE TRAVEL LANE AT 20 FOOT SPACING.
4. IF THE BARRIER IS PLACED SUCH THAT THE EXISTING LANE NEEDS TO BE MOVED ONTO THE SHOULDER THEN THE EDGE LINE SHALL BE REMOVED AND TEMPORARY TAPE SHALL BE USED TO PROVIDE A 12 FOOT LANE. RUMBLE STRIP SHALL BE FILLED AND RESTORED AS DIRECTED BY THE ENGINEER.
5. THE END OF THE BARRIER FACING APPROACHING TRAFFIC SHALL MEET THE FOLLOWING REQUIREMENTS:
   - A. WHEN NO GUARDRAIL IS PRESENT A 30 FOOT OFFSET FROM THE EDGE OF TRAVELED WAY SHOULD BE USED.
   - B. WHEN NO GUARDRAIL IS PRESENT AND A 30 FOOT OFFSET CANNOT BE ATTAINED AN ENERGY ABSORPTION ATTENUATOR SHALL BE USED.
   - C. WHEN GUARDRAIL IS PRESENT THE GUARDRAIL SHALL BE BROKEN AND THE BARRIER TAPERED TO A POINT OUTSIDE THE DEFLECTION DISTANCE OF THE GUARDRAIL.
6. DASHED LANE LINE REMOVAL SHALL BEGIN 750 FEET IN ADVANCE OF THE BEGINNING OF THE SHOULDER TAPER.
7. CHANNELIZING DEVICES OTHER THAN RETROREFLECTIVE PLASTIC DRUMS SHALL BE ALLOWED ALONG TANGENT SECTIONS. THE TYPE OF DEVICE SHALL BE CONSISTENT THROUGHOUT THE TANGENT SECTION AND SHALL REMAIN STABLE WHILE UNATTENDED.
8. THE NUMBER OF CHANNELIZING DEVICES, TYPE III BARRICADE AND OTHER TRAFFIC CONTROL DEVICES SHOWN ARE FOR ILLUSTRATIVE PURPOSES ONLY. THE ACTUAL NUMBER REQUIRED ARE TO BE DETERMINED BASED ON INDIVIDUAL DETOUR CONDITIONS (TAPERS, SPEED LIMITS, LENGTH OF DETOUR, CURVE, ETC.). WARNING LIGHTS SHALL NOT BE USED ON CHANNELIZING DEVICES.
9. PLACE LAST CHANNELIZING DEVICE 50 FEET BEYOND THE END OF BARRIER.
10. THE ARROW PANEL SHALL BE PLACED ON THE SHOULDER OF THE ROADWAY, AS CLOSE AS PRACTICAL TO THE BEGINNING OF THE MERGING TAPER.
11. THE "ROAD WORK NEXT XX MILES" SIGN (G20-1) SHALL BE INSTALLED IN ADVANCE OF TEMPORARY TRAFFIC CONTROL ZONES THAT ARE MORE THAN TWO MILES IN LENGTH, OR AS DIRECTED BY THE ENGINEER. DISTANCES SHALL BE STATED TO THE NEAREST WHOLE MILE.
12. "SPEED LIMIT XX" (R2-1) SIGN TO BE USED IF A TEMPORARY SPEED ZONE IS IN PLACE.

OTHER STDS. REQUIRED: **G–1, T–1, T–11, T–12**

LEGEND

- FLOW OF TRAFFIC
- RETROREFLECTIVE PLASTIC DRUM
- FLASHING ARROW PANEL
- TYPE III BARRICADE
- PAVEMENT MARKING REMOVAL
- TEMPORARY BARRIER
- WORK AREA

ONE LANE CLOSED WITH TEMPORARY BARRIER PROTECTION

REVISIONS AND CORRECTIONS

AUG. 6, 2012 - ORIGINAL APPROVAL DATE

APPROVED

HIGHWAY SAFETY & DESIGN ENGINEER

DIRECTOR OF PROGRAM DEVELOPMENT

Mark D. Richter

FEDERAL HIGHWAY ADMINISTRATION

TRAFFIC CONTROL DIVIDED HIGHWAY ONE LANE CLOSED

VERMONT AGENCY OF TRANSPORTATION

STANDARD

T-13

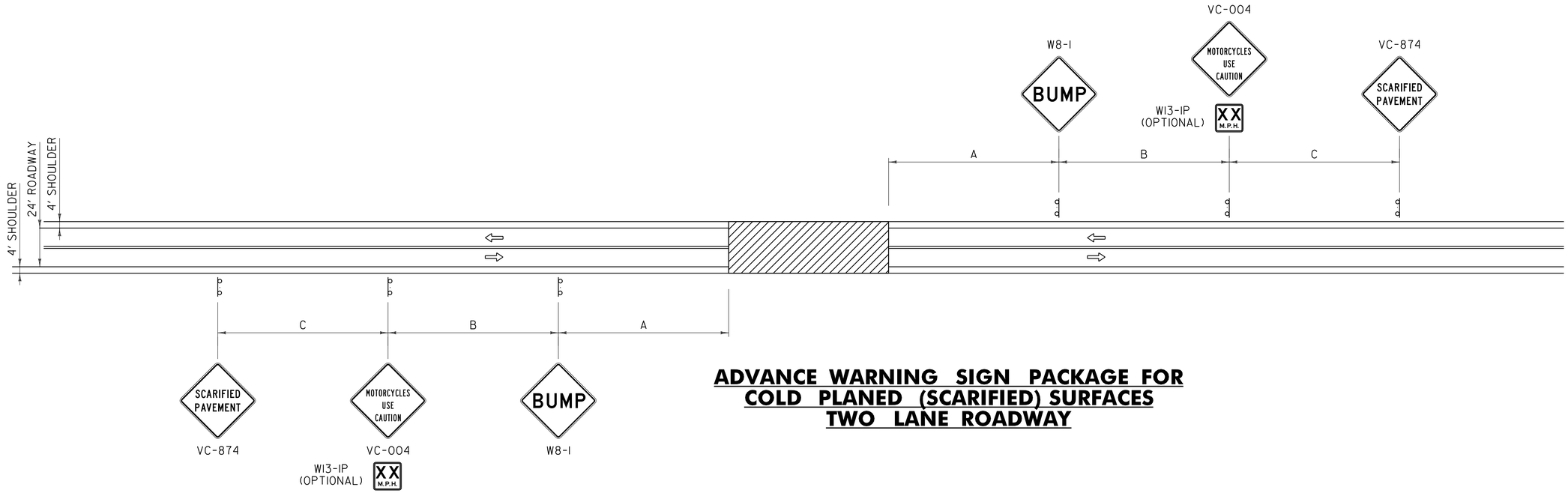

ADVANCE WARNING SIGN PACKAGE FOR COLD PLANED (SCARIFIED) SURFACES TWO LANE ROADWAY

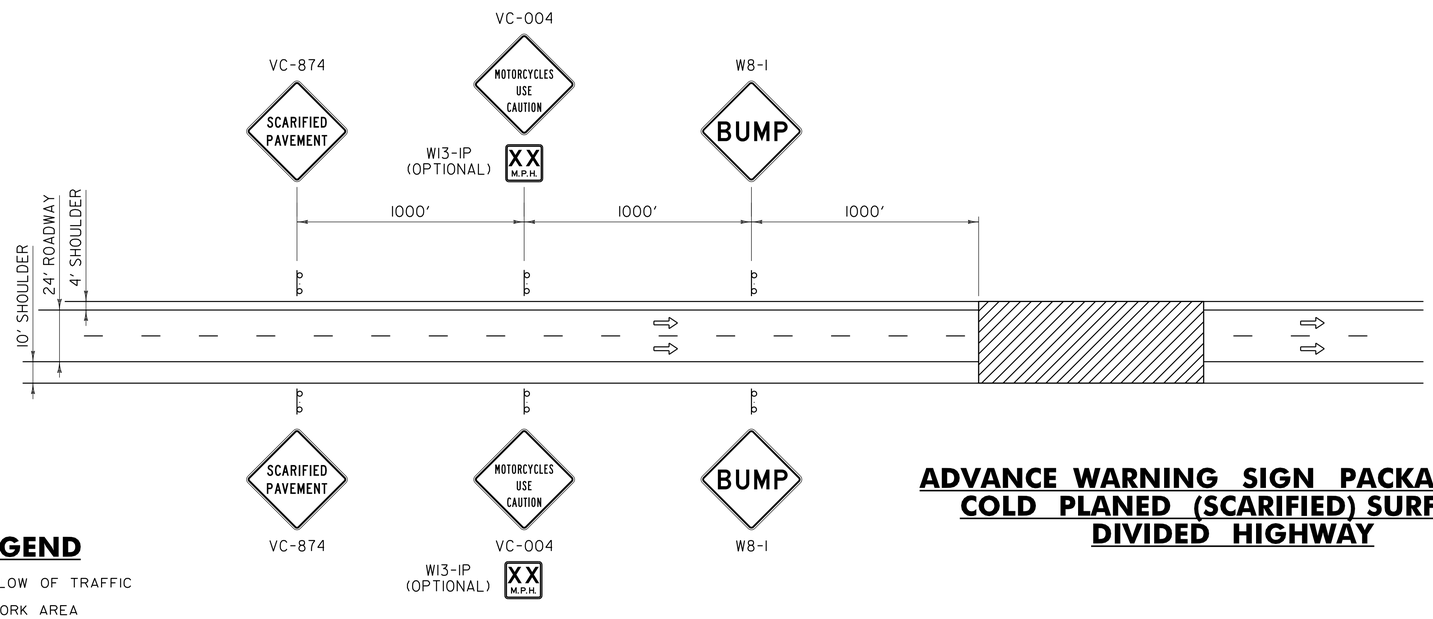

ADVANCE WARNING SIGN PACKAGE FOR COLD PLANED (SCARIFIED) SURFACES DIVIDED HIGHWAY

LEGEND

⇨ FLOW OF TRAFFIC

WORK AREA

GENERAL NOTES:

1. THE BUMP SIGN MAY BE ELIMINATED WHEN THERE IS NO BUMP. WHEN THE CONTRACTOR IS WORKING IN THE CONSTRUCTION AREA, THE APPROPRIATE ADVANCED WARNING SIGN PACKAGE SHALL BE USED. SEE THE "MANUAL ON UNIFORM TRAFFIC CONTROL DEVICES" (MUTCD) FOR ADDITIONAL INFORMATION.
2. GATE POSTING OF SIGNS IS AN OPTION AS DETERMINED BY THE ENGINEER FOR TWO LANE ROADWAY WHEN PASSING, TURNING OR CLIMBING LANES LIMIT VISIBILITY.
3. FOR DIMENSIONS A, B AND C, REFER TO THE MUTCD. USE TABLE 6C-1 (RECOMMENDED ADVANCE WARNING SIGN MINIMUM SPACING), FOR SIGN SPACING.

OTHER STDS. REQUIRED: **T–1, T–28**

REVISIONS AND CORRECTIONS

AUG. 6, 2012 - ORIGINAL APPROVAL DATE

APPROVED

HIGHWAY SAFETY & DESIGN ENGINEER

DIRECTOR OF PROGRAM DEVELOPMENT

Mark D. Richter

FEDERAL HIGHWAY ADMINISTRATION

TRAFFIC CONTROL MISCELLANEOUS DETAILS

VERMONT AGENCY OF TRANSPORTATION

STANDARD

T-17

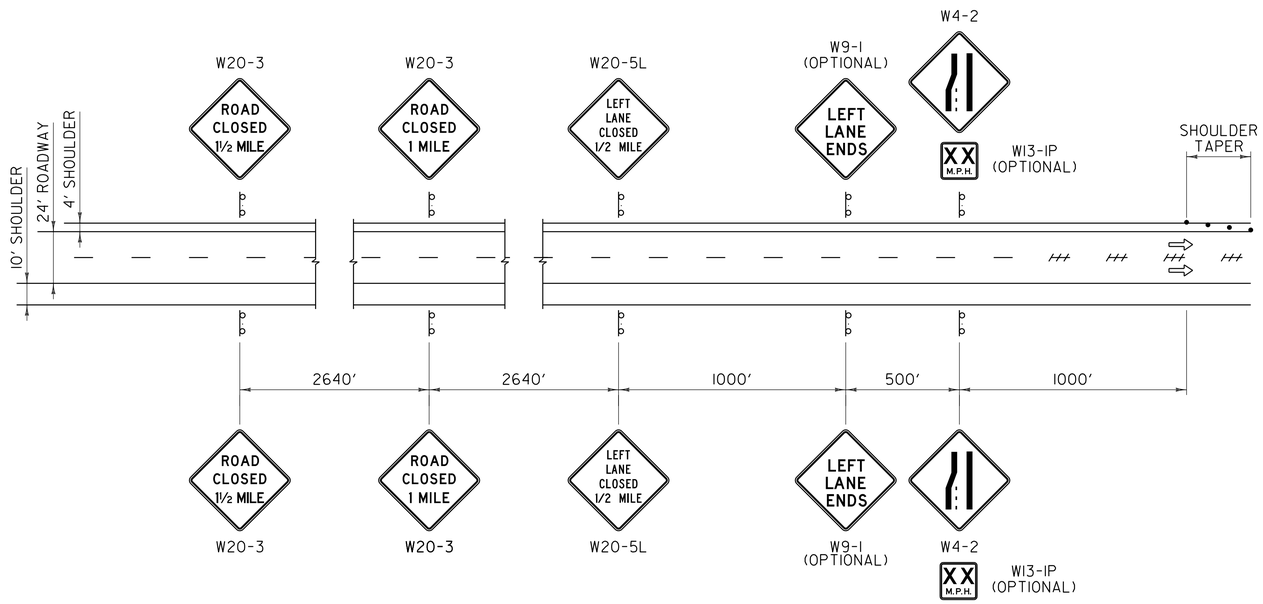

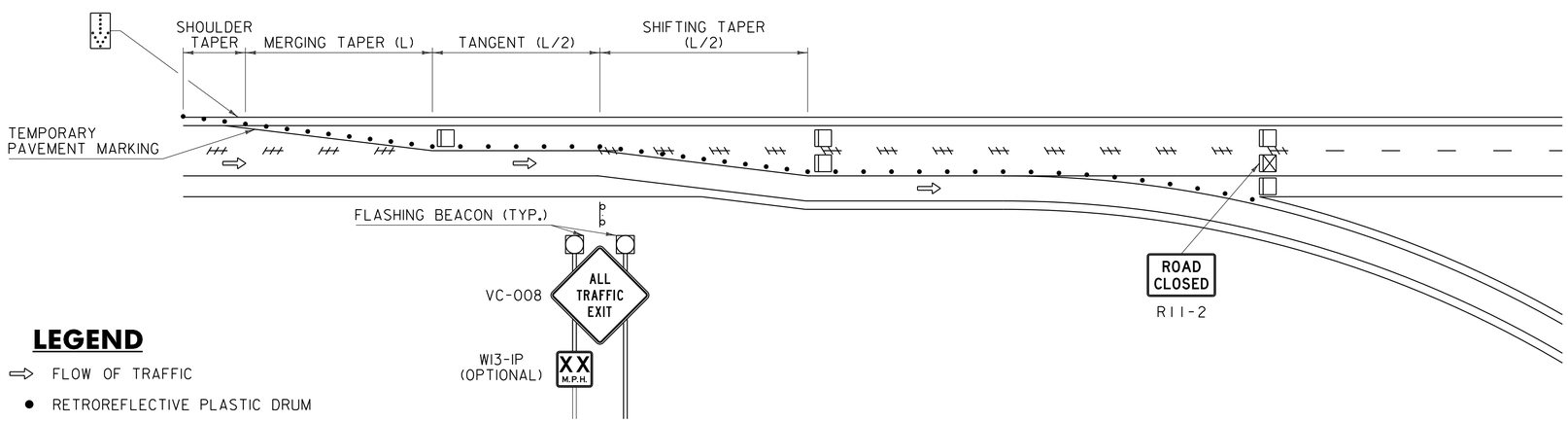

LEGEND

- FLOW OF TRAFFIC
- RETROREFLECTIVE PLASTIC DRUM
- FLASHING ARROW PANEL
- TYPE III BARRICADE
- TYPE III (MOD.) BARRICADE
- PAVEMENT MARKING REMOVAL

GENERAL NOTES:

1. ALL DISTANCES ARE MINIMUMS. FIELD CONDITIONS SHALL CONTROL THE ACTUAL PLACEMENT.
2. THE NUMBER OF CHANNELIZING DEVICES, TYPE III BARRICADES AND OTHER TRAFFIC CONTROL DEVICES SHOWN ON THIS SHEET ARE FOR ILLUSTRATIVE PURPOSES ONLY. THE ACTUAL NUMBER REQUIRED ARE TO BE DETERMINED BASED ON INDIVIDUAL DETOUR CONDITIONS (TAPERS, SPEED LIMITS, LENGTH OF DETOUR, CURVE, ETC.).
3. TYPE III MODIFIED BARRICADE SHALL BE TYPE III BARRICADE WITH THE ASSOCIATED SIGNING MOUNTED ON IT. ALL BARRICADES SHALL MEET "NATIONAL COOPERATIVE HIGHWAY RESEARCH PROGRAM" (NCHRP) REPORT 350 OR THE "AMERICAN ASSOCIATION OF STATE HIGHWAY AND TRANSPORTATION OFFICIALS" (AASHTO) "MANUAL FOR ASSESSING SAFETY HARDWARE" (MASH). THE APPROPRIATE RESOURCE SHALL BE DETERMINED AS DESCRIBED IN THE MASH PUBLICATION.
4. BEGIN DASHED LANE LINE REMOVAL 750 FEET IN ADVANCE OF THE BEGINNING OF SHOULDER TAPER AND CONTINUE TO THE END OF THE ROAD CLOSURE.
5. THE ARROW PANEL SHALL BE PLACED ON THE SHOULDER OF THE ROADWAY, AS CLOSE AS PRACTICAL TO THE BEGINNING OF THE MERGING TAPER.
6. THE ARROW PANEL MAY BE POWERED BY A PORTABLE DIESEL GENERATOR AT INSTALLATIONS WHICH WILL REMAIN IN SERVICE FOR LESS THAN SIX MONTHS. INSTALLATIONS WHICH WILL REMAIN IN PLACE FOR SIX MONTHS OR MORE SHALL HAVE A PERMANENT POWER SOURCE. THE CONTRACTOR SHALL BE RESPONSIBLE FOR CONTACTING THE UTILITY COMPANY TO PROVIDE A PERMANENT POWER SOURCE FOR THE FLASHING ARROW PANEL.
7. FLASHING BEACONS SHALL BE INSTALLED ON THE "ALL TRAFFIC EXIT" (VC-008) SIGN. THE CONTRACTOR SHALL BE RESPONSIBLE FOR CONTACTING THE UTILITY COMPANY TO PROVIDE A PERMANENT POWER SOURCE FOR THE "ALL TRAFFIC EXIT" (VC-008) BEACONS. SOLAR POWERED BEACONS MAY BE USED IF APPROPRIATE FOR THE SITE CONDITIONS.

OTHER STDS. REQUIRED: **T–1, T–12, T–28**

REVISIONS AND CORRECTIONS

AUG. 6, 2012 - ORIGINAL APPROVAL DATE

APPROVED

HIGHWAY SAFETY & DESIGN ENGINEER

DIRECTOR OF PROGRAM DEVELOPMENT

Mark D. Richter

FEDERAL HIGHWAY ADMINISTRATION

TEMPORARY TERMINATION OF EXPRESSWAY & FREEWAY FACILITIES

VERMONT AGENCY OF TRANSPORTATION

STANDARD

T-20

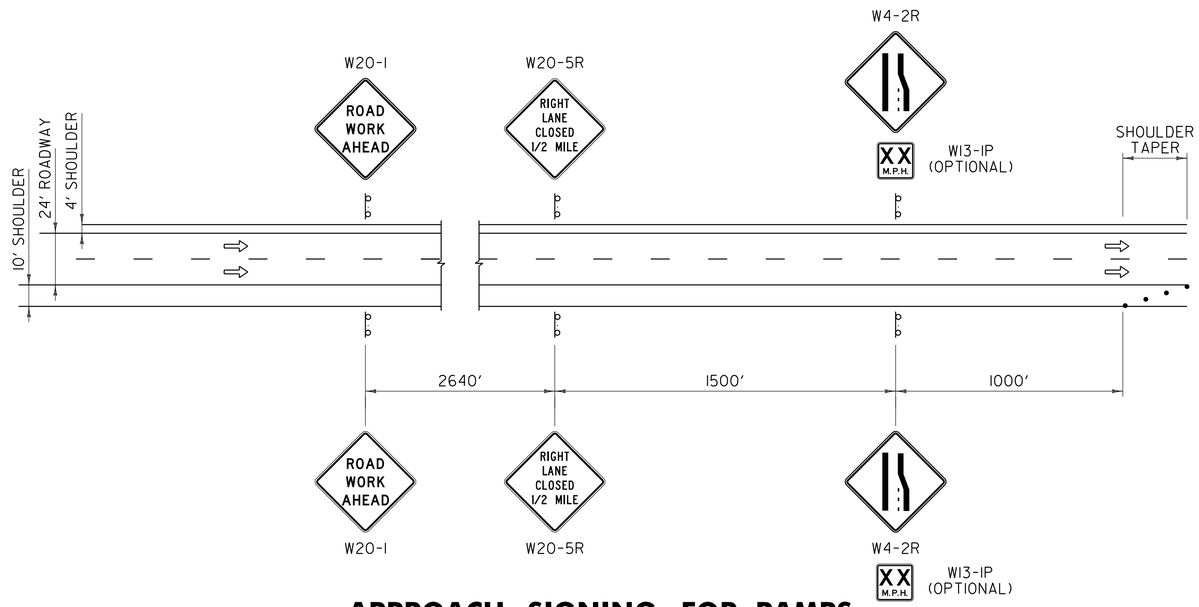

APPROACH SIGNING FOR RAMPS

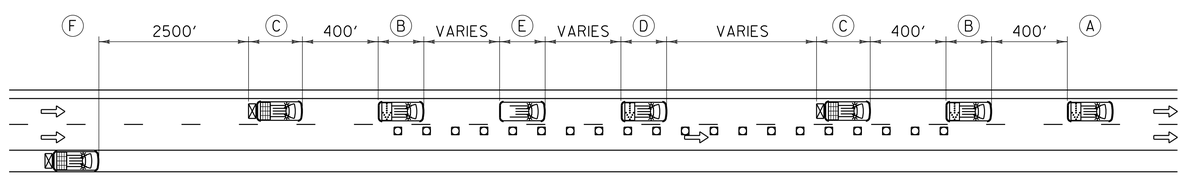

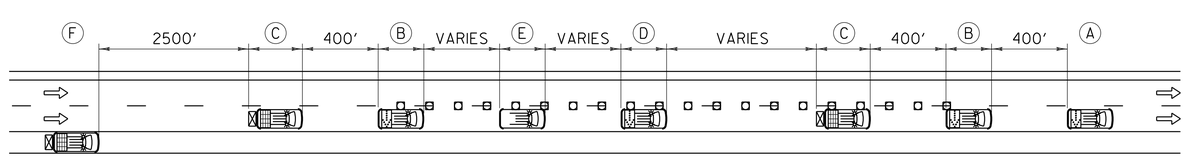

EDGE LINE MARKING OPERATION

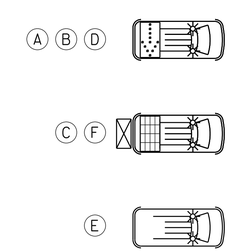

OPERATION VEHICLE SYMBOLOGY

LEGEND

- FLOW OF TRAFFIC
- RETROREFLECTIVE PLASTIC DRUM
- CONE
- FLASHING ARROW PANEL
- CHANGEABLE MESSAGE BOARD
- TRUCK MOUNTED ATTENUATOR
- PAVEMENT MARKING OPERATION VEHICLE
- (A) PAVEMENT MARKING VEHICLE WITH FLASHING ARROW PANEL
- (B) CONE TRUCK WITH FLASHING ARROW PANEL
- (C) PROTECTION VEHICLE WITH CHANGEABLE MESSAGE SIGN AND TRUCK MOUNTED ATTENUATOR
- (D) SUPPLY TRUCK WITH FLASHING ARROW PANEL AND MOUNTED SIGN (OPTIONAL)
- (E) UNIFORMED TRAFFIC OFFICER (OPTIONAL)
- (F) ADVANCED WARNING VEHICLE WITH CHANGEABLE MESSAGE SIGN AND TRUCK MOUNTED ATTENUATOR

GENERAL NOTES:

1. ALL WORK VEHICLES SHALL DISPLAY HIGH-INTENSITY ROTATING, FLASHING, OSCILLATING, OR STROBE LIGHTS, IN ADDITION TO VEHICLE HAZARD LIGHTS.
2. CONE SPACING SHALL BE TWICE THE SPEED LIMIT, IN FEET.
3. THE SECOND CONE TRUCK SHALL NOT RETRIEVE CONES UNTIL THE NEW PAVEMENT MARKINGS ARE DRY.
4. THE NUMBER OF CHANNELIZING DEVICES AND OTHER TRAFFIC CONTROL DEVICES SHOWN ARE FOR ILLUSTRATIVE PURPOSES ONLY. THE ACTUAL NUMBER REQUIRED ARE TO BE DETERMINED BASED ON INDIVIDUAL DETOUR CONDITIONS (TAPERS, SPEED LIMITS, LENGTH OF DETOUR, CURVE, ETC.). WARNING LIGHTS SHALL NOT BE USED ON CHANNELIZING DEVICES.
5. ALL DISTANCES ARE DESIRABLE MINIMUMS, FIELD CONDITIONS SHALL CONTROL THE ACTUAL PLACEMENT.
6. CONE VEHICLES SHALL HAVE CAGES TO PROTECT THE PERSON PLACING AND RETRIEVING CONES.
7. APPROACH SIGNING IS FOR MAINLINE CLOSURE AT ENTRANCE RAMPS AND EXIT RAMPS AND WHEN THE ADVANCED WARNING VEHICLE IS NOT USED. APPROACH SIGNING SHALL BE USED FOR THE APPROPRIATE LANE CLOSURE. SIGNS SHALL BE ERECTED BEFORE THE START OF ANY WORK AND SHALL BE COVERED UNTIL WORK COMMENCES, DURING PERIODS OF INACTIVITY OR UPON COMPLETION OF THE WORK. EACH SIGN SHALL BE ERECTED IN A NEAT AND WORKMANLIKE MANNER.
8. RAMP SIGNING SHALL BE IN PLACE PRIOR TO BEGINNING MAINLINE PAVEMENT MARKING OPERATIONS.
9. MAXIMUM ALLOWABLE LANE CLOSURE IS THREE MILES.

OTHER STDS. REQUIRED: **T–1, T–12, T–23**

REVISIONS AND CORRECTIONS

AUG. 6, 2012 - ORIGINAL APPROVAL DATE

APPROVED

HIGHWAY SAFETY & DESIGN ENGINEER

DIRECTOR OF PROGRAM DEVELOPMENT

Mark D. Richter

FEDERAL HIGHWAY ADMINISTRATION

TRAFFIC CONTROL FOR PAVEMENT MARKING ON DIVIDED HIGHWAY

VERMONT AGENCY OF TRANSPORTATION

STANDARD

T-22

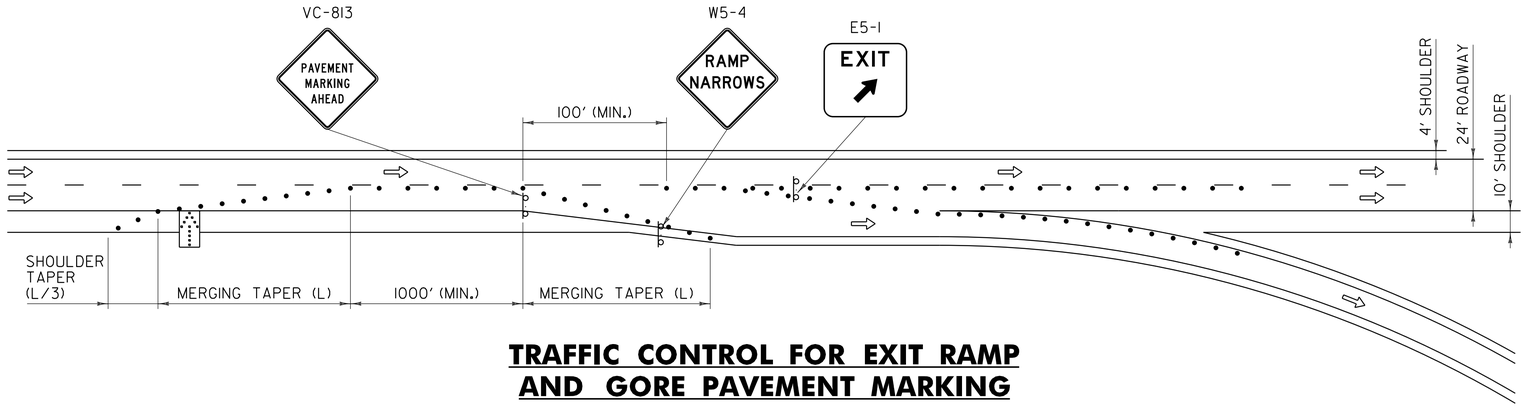

TRAFFIC CONTROL FOR EXIT RAMP AND GORE PAVEMENT MARKING

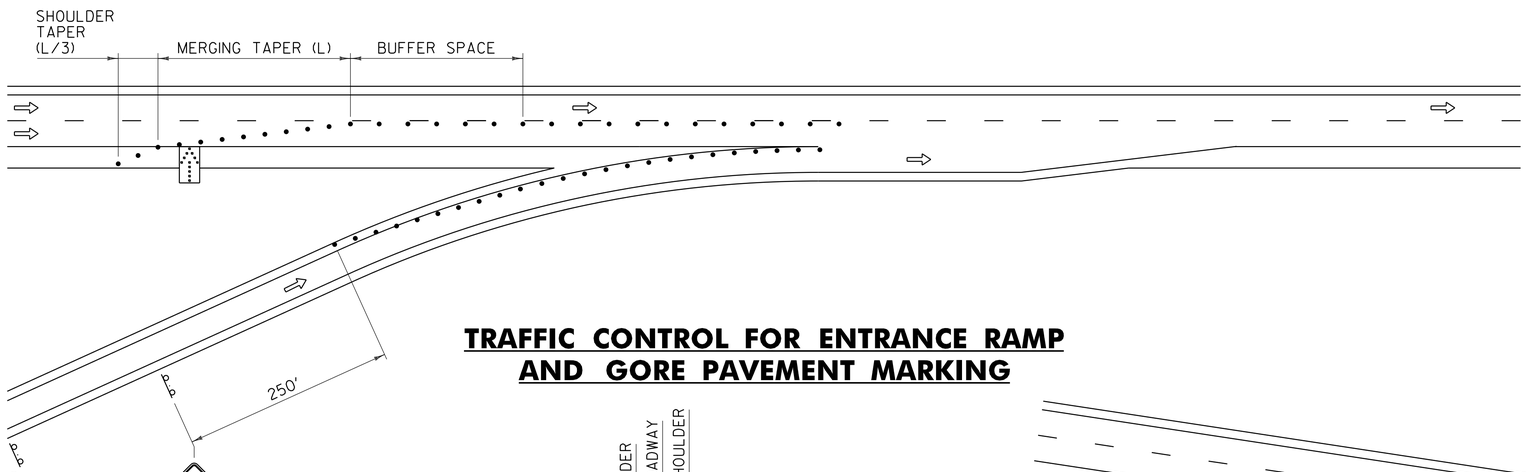

TRAFFIC CONTROL FOR ENTRANCE RAMP AND GORE PAVEMENT MARKING

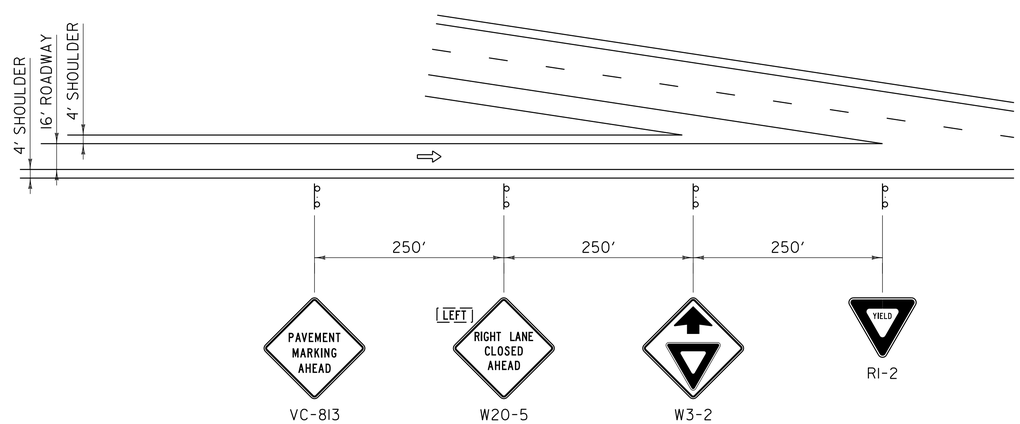

ENTRANCE RAMP SIGNING

GENERAL NOTES:

1. ALL WORK VEHICLES SHALL DISPLAY HIGH-INTENSITY ROTATING, FLASHING, OSCILLATING, OR STROBE LIGHTS, IN ADDITION TO VEHICLE HAZARD LIGHTS.
2. A UNIFORMED TRAFFIC OFFICER SHALL BE PRESENT DURING ENTRANCE AND EXIT RAMP PAVEMENT MARKING.
3. CONE SPACING SHALL BE TWICE THE SPEED LIMIT, IN FEET.
4. THE NUMBER OF CHANNELIZING DEVICES AND OTHER TRAFFIC CONTROL DEVICES SHOWN ARE FOR ILLUSTRATIVE PURPOSES ONLY. THE ACTUAL NUMBER REQUIRED ARE TO BE DETERMINED BASED ON INDIVIDUAL DETOUR CONDITIONS (TAPERS, SPEED LIMITS, LENGTH OF DETOUR, CURVE, ETC.). WARNING LIGHTS SHALL NOT BE USED ON CHANNELIZING DEVICES.
5. ALL DISTANCES ARE DESIRABLE MINIMUMS. FIELD CONDITIONS SHALL CONTROL THE ACTUAL PLACEMENT.
6. HAND WORK MUST BE PERFORMED WITH A SPOTTER AT ALL TIMES.
7. TRAFFIC CONTROL DEVICES SHALL BE PLACED A MINIMUM OF TWO FEET OUTSIDE OF THE AREA BEING PAINTED ON ENTRANCE AND EXIT RAMPS.
8. AT ENTRANCE RAMPS; THE "YIELD" (RI-2) SIGN SHALL BE PLACED AT THE THEORETICAL GORE TO PROVIDE ADEQUATE SIGHT DISTANCE OF ONCOMING MAINLINE VEHICULAR TRAFFIC.

OTHER STDS. REQUIRED: **T-1, T-12, T-22, T-28, T-31**

LEGEND

- ⇨ FLOW OF TRAFFIC
- ● RETROREFLECTIVE PLASTIC DRUM
- FLASHING ARROW PANEL

REVISIONS AND CORRECTIONS

AUG. 6, 2012 - ORIGINAL APPROVAL DATE

APPROVED

HIGHWAY SAFETY & DESIGN ENGINEER

DIRECTOR OF PROGRAM DEVELOPMENT

Mark D. Richter

FEDERAL HIGHWAY ADMINISTRATION

TRAFFIC CONTROL FOR PAVEMENT MARKING ON DIVIDED HIGHWAY

VERMONT AGENCY OF TRANSPORTATION

STANDARD

T-23

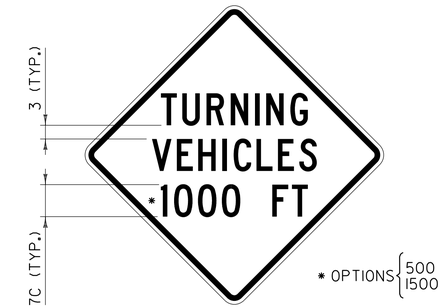

VC–001

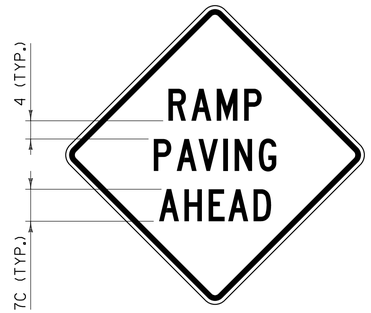

VC–003

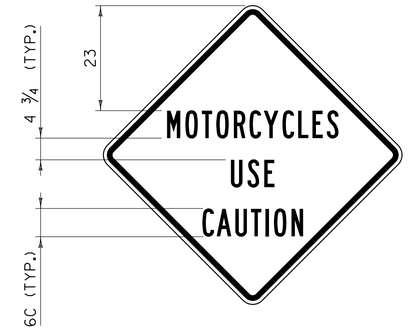

VC–004

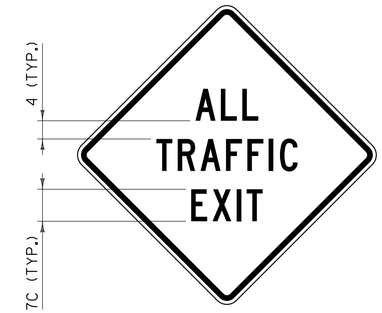

VC–008

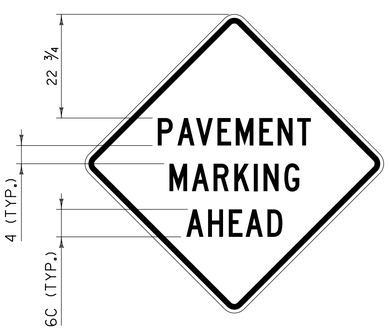

VC–813

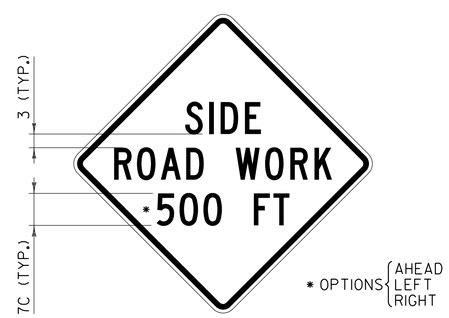

VC–869

VC–874

GENERAL NOTES:

1. COLORS FOR SIGNS SHALL BE BLACK LEGEND AND BORDER ON FLUORESCENT ORANGE BACKGROUND.
2. CONSTRUCTION SIGNS SHALL BE 48 INCH BY 48 INCH. IF SOLID SUBSTRATE SIGNS ARE USED, SIGNS SHALL HAVE CORNERS ROUNDED TO A THREE INCH RADIUS.
3. SIGNS SHALL HAVE 1 1/4 INCH WIDE BORDERS THAT ARE INDENTED 3/4 INCH FROM THE EDGE OF THE SIGN.
4. SIGNS SHALL HAVE THE LEGEND CENTERED HORIZONTALLY AND VERTICALLY ON THE SIGN UNLESS OTHERWISE INDICATED.
5. ALL DIMENSIONS SHOWN IN INCHES.

OTHER STDS. REQUIRED: **T–1**

REVISIONS AND CORRECTIONS

AUG. 6, 2012 - ORIGINAL APPROVAL DATE

APPROVED

HIGHWAY SAFETY & DESIGN ENGINEER

DIRECTOR OF PROGRAM DEVELOPMENT

Mark D. Richter

FEDERAL HIGHWAY ADMINISTRATION

CONSTRUCTION SIGN DETAILS

VERMONT AGENCY OF TRANSPORTATION

STANDARD

T - 28

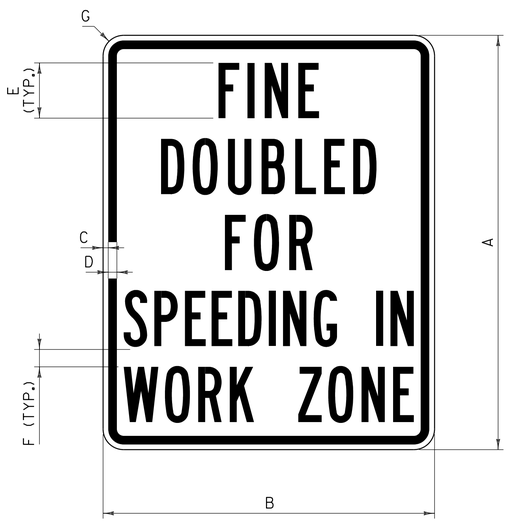

VR–355

SIGN	DIMENSIONS						
	A	B	C	D	E	F	G
STANDARD	36	30	1/2	3/4	4C	2 1/4	1 7/8
EXPRESSWAY/ FREEWAY	60	48	3/4	1 1/4	8B	3	3

NOTES:

1. "SPEEDING IN" AND "WORK ZONE" SHALL EACH HAVE A SPECIFIED WIDTH OF 26 INCHES FOR STANDARD AND 42 INCHES FOR EXPRESSWAY/FREEWAY.
2. THE SIGN SHALL HAVE BLACK LEGEND AND BORDER ON A WHITE BACKGROUND WITH RETROREFLECTIVE SHEETING EQUAL TO OR EXCEEDING "AMERICAN ASSOCIATION OF STATE HIGHWAY AND TRANSPORTATION OFFICIALS" (AASHTO) M 268 ["AMERICAN SOCIETY FOR TESTING AND MATERIALS" (ASTM) D 4956] TYPE III.
3. LEGEND SHALL BE CENTERED HORIZONTALLY AND VERTICALLY.

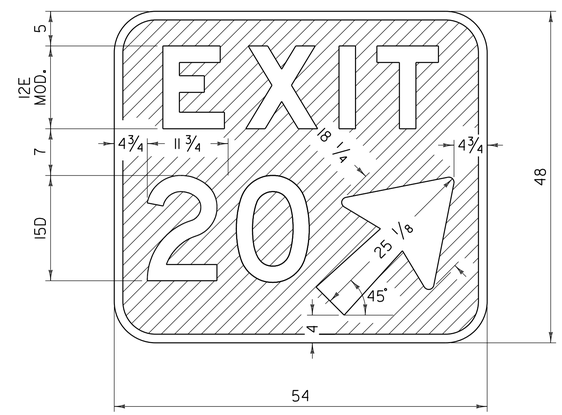

VC5–1A

NOTES:

1. THE SIGN SHALL BE WHITE RETROREFLECTIVE LEGEND ON A GREEN RETROREFLECTIVE BACKGROUND, BOTH SHALL HAVE RETROREFLECTIVE SHEETING EQUAL TO OR EXCEEDING "AMERICAN ASSOCIATION OF STATE HIGHWAY AND TRANSPORTATION OFFICIALS" (AASHTO) M 268 ["AMERICAN SOCIETY FOR TESTING AND MATERIALS" (ASTM) D 4956] TYPE III.
2. CORNERS SHALL BE ROUNDED TO A SIX INCH RADIUS.
3. THE SIGN SHALL HAVE A 1 1/4 INCH WIDE BORDER ALONG THE EDGE OF THE SIGN.
4. EXIT NUMBER SHALL BE AS PER PLANS, OPTICALLY SPACED.
5. "EXIT" SHALL BE CENTERED HORIZONTALLY.

GENERAL NOTES:

1. ALL DIMENSIONS IN INCHES.

OTHER STDS. REQUIRED: **T–1**

REVISIONS AND CORRECTIONS

AUG. 6, 2012 - ORIGINAL APPROVAL DATE

APPROVED

HIGHWAY SAFETY & DESIGN ENGINEER

DIRECTOR OF PROGRAM DEVELOPMENT

Mark D. Richter

FEDERAL HIGHWAY ADMINISTRATION

CONSTRUCTION SIGN DETAILS

VERMONT AGENCY OF TRANSPORTATION

STANDARD

T - 31

DROP-OFF ADJACENT TO TRAVELED WAY

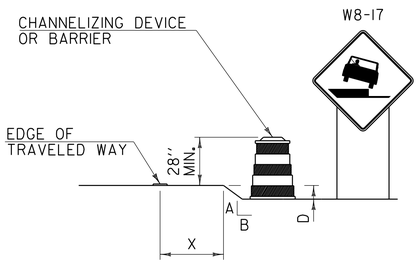

TYPE 1

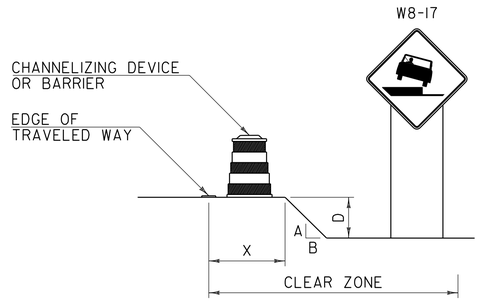

TYPE 2

NOTES:

1. CHANNELIZING DEVICES OR BARRIER SHOULD BE PLACED TO MAXIMIZE THE WIDTH OF THE TRAVELED WAY.
2. SEE CHART "A" FOR SPECIFIC REQUIREMENTS.
3. IF THE DROP-OFF REQUIRES CHANNELIZING DEVICES TO REMAIN IN PLACE OVERNIGHT, THEN "SHOULDER DROP-OFF SYMBOL" (W8-17) SIGNS SHOULD BE INSTALLED.

DROP-OFF BETWEEN ADJACENT TRAVELED LANES

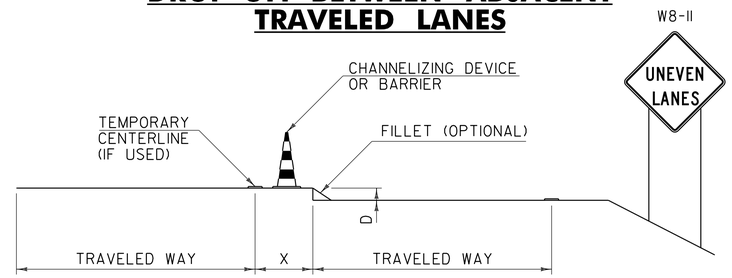

NOTES:

1. WHENEVER A LONGITUDINAL DROP-OFF BETWEEN ADJACENT TRAVELED LANES IS TO BE LEFT OVERNIGHT, THEN "UNEVEN LANES" (W8-11) SIGNS AND CHANNELIZING DEVICES SHOULD BE INSTALLED.
2. IF REQUIRED, THE CHANNELIZING DEVICES USED SHOULD BE THOSE WHICH MAXIMIZE THE WIDTH OF THE TRAVELED LANE (I.E. CONES, VERTICAL PANELS OR TUBULAR MARKERS).
3. A BITUMINOUS CONCRETE FILLET WITH A 1.5:1 SLOPE MAY BE USED IN PLACE OF CHANNELIZING DEVICES, HOWEVER THE "UNEVEN LANES" (W8-11) SIGNS SHOULD STILL BE INSTALLED.
4. SEE CHART "A" FOR SPECIFIC REQUIREMENTS.

DROP-OFF BEYOND SHOULDER OR CURB

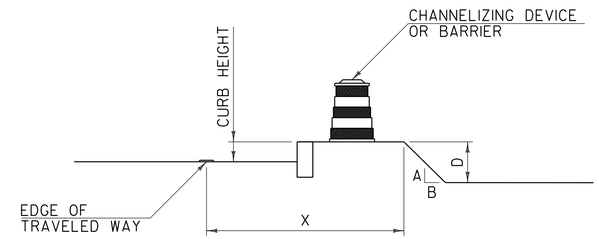

NOTES:

1. USE CHART "A" FOR VERTICAL CURBS UNDER SIX INCHES, MOUNTABLE CURBS OR ROADWAYS WITH A POSTED SPEED ABOVE 40 MPH.
2. USE CHART "B" FOR VERTICAL CURBS SIX INCHES OR GREATER.

CHART "A"
ALL SPEEDS WITH NO CURB OR MOUNTABLE CURB

X (FEET)	DROP (D) (INCHES)	A:B SLOPE	RECOMMENDED DEVICE
0 TO 4'	LESS THAN 2"	ANY	NONE
	2" TO 6"	1:1.5 OR FLATTER	NONE
		STEEPER THAN 1:1.5	CHANNELIZING DEVICE
	GREATER THAN 6"	1:3 OR FLATTER	NONE
		STEEPER THAN 1:3	BARRIER
4' TO 10'	LESS THAN 6"	ANY	NONE
	6" TO 12"	1:3 OR FLATTER	NONE
		STEEPER THAN 1:3	BARRIER
	GREATER THAN 12"	1:3 OR FLATTER	NONE
		STEEPER THAN 1:3	BARRIER
10' TO CZ	LESS THAN OR EQUAL TO 12"	ANY	NONE
	GREATER THAN 12"	1:3 OR FLATTER	NONE
		STEEPER THAN 1:3	BARRIER

NOTES:

1. THE MINIMUM CLEAR ZONE FOR FREEWAYS IS TO BE DETERMINED PER THE CURRENT AASHTO ROADSIDE DESIGN GUIDE. ALL OTHER HIGHWAYS WILL BE DETERMINED PER THE CURRENT "VERMONT STATE STANDARDS" BOOK.
2. CHANNELIZING DEVICES MAY BE USED INSTEAD OF BARRIER FOR SHORT TERM OPERATIONS.
3. ON BORDERLINE CONDITIONS, THE ENGINEER SHOULD DETERMINE WHICH TREATMENT IS ADEQUATE FOR THE EXISTING CONDITIONS.

CHART "B"
40 MPH OR LESS WITH VERTICAL CURB

X (FEET)	DROP (D) (INCHES)	DEVICE REQUIRED
0-10'	LESS THAN OR EQUAL TO 12"	NONE
0-10'	GREATER THAN 12"	CHANNELIZING DEVICE
GREATER THAN 10'	ANY	NONE

GENERAL NOTES:

1. THESE CONDITIONS AND TREATMENTS ARE ONLY PART OF THE TRAFFIC CONTROL SYSTEM AND SHOULD BE USED IN ADDITION TO THE PROPER WORK ZONE SIGNING.
2. THE FOLLOWING ARE "MANUAL ON UNIFORM TRAFFIC CONTROL DEVICES" (MUTCD) COMPLIANT CHANNELIZING DEVICES:

   A. VERTICAL PANEL
   B. TYPE I OR TYPE II BARRICADE
   C. PLASTIC DRUM
   D. CONE - WHERE APPLICABLE
   E. TUBULAR MARKERS

   IF CHANNELIZING DEVICES ARE REQUIRED TO STAY IN PLACE DURING NIGHTTIME HOURS, THEY SHALL BE STABILIZED WHILE UNATTENDED IN ACCORDANCE WITH THE MUTCD.
3. WHERE BARRIER IS NECESSARY, THE BARRIER SHALL BE TAPERED BEYOND THE CLEAR ZONE. WHEN THE BARRIER CANNOT BE TAPERED BEYOND THE CLEAR ZONE, A MUTCD COMPLIANT END TREATMENT SHALL BE USED. BARRIER AND END TREATMENT SHALL MEET "NATIONAL COOPERATIVE HIGHWAY RESEARCH PROGRAM" (NCHRP) REPORT 350 OR THE "AMERICAN ASSOCIATION OF STATE HIGHWAY AND TRANSPORTATION OFFICIALS" (AASHTO) "MANUAL FOR ASSESSING SAFETY HARDWARE" (MASH). THE APPROPRIATE RESOURCE SHALL BE DETERMINED AS DESCRIBED IN THE MASH PUBLICATION.
4. CHANNELIZING DEVICE SPACING ALONG A LONGITUDINAL DROP-OFF (TANGENT) SHALL BE AS FOLLOWS:

   TANGENT - CHANNELIZING DEVICES SHALL BE SPACED "2S" ("S" IS EQUAL TO THE POSTED SPEED LIMIT IN FEET) APART.
5. "LOW SHOULDER" (W8-9) AND "SHOULDER DROP-OFF SYMBOL" (W8-17) SIGNS, WHEN USED, SHOULD BEGIN PRIOR TO THE DROP-OFF CONDITION AND SHOULD BE REPEATED EVERY 1500 FEET.

OTHER STDS. REQUIRED: **T-1**

REVISIONS AND CORRECTIONS

AUG. 6, 2012 - ORIGINAL APPROVAL DATE

APPROVED

HIGHWAY SAFETY & DESIGN ENGINEER

DIRECTOR OF PROGRAM DEVELOPMENT

Mark D. Richter

FEDERAL HIGHWAY ADMINISTRATION

CONSTRUCTION ZONE LONGITUDINAL DROP-OFFS

VERMONT AGENCY OF TRANSPORTATION

STANDARD

T-35

DROP-OFF ADJACENT TO TRAVELED WAY

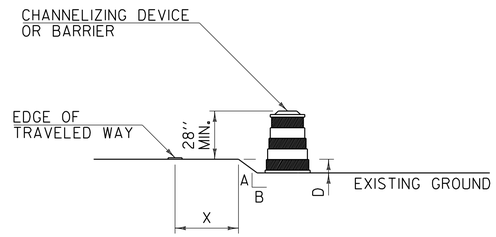

NOTES:

1. CHANNELIZING DEVICES SHOULD BE PLACED TO MAXIMIZE THE WIDTH OF THE TRAVELED WAY.
2. SEE CHART "A" FOR SPECIFIC REQUIREMENTS.
3. IF THE DROP-OFF REQUIRES CHANNELIZING DEVICES TO REMAIN IN PLACE OVERNIGHT, THEN "LOW SHOULDER" (W8-9) OR "SHOULDER DROP-OFF SYMBOL" (W8-17) SIGNS SHOULD BE INSTALLED.

DROP-OFF BETWEEN ADJACENT TRAVELED LANES

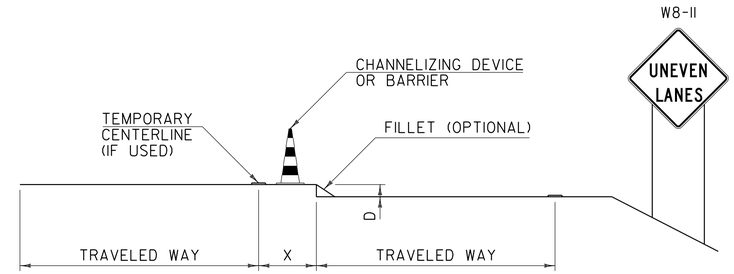

NOTES:

1. WHENEVER A LONGITUDINAL DROP-OFF BETWEEN ADJACENT TRAVELED LANES IS TO BE LEFT OVERNIGHT, THEN "UNEVEN LANES" (W8-11) SIGNS AND CHANNELIZING DEVICES SHOULD BE INSTALLED.
2. IF REQUIRED, THE CHANNELIZING DEVICES USED SHALL BE THOSE WHICH MAXIMIZE THE WIDTH OF THE TRAVELED LANE (I.E. CONES, VERTICAL PANELS OR TUBULAR MARKERS).
3. A BITUMINOUS CONCRETE FILLET WITH A 1.5:1 SLOPE MAY BE USED IN PLACE OF CHANNELIZING DEVICES, HOWEVER THE "UNEVEN LANES" (W8-11) SIGNS SHOULD STILL BE INSTALLED.
4. SEE CHART "A" FOR SPECIFIC REQUIREMENTS.

CHART "A"
ALL SPEEDS WITH NO CURB

X (FEET)	DROP (D) (INCHES)	A:B SLOPE	DEVICE REQUIRED
0 TO 4'	LESS THAN 2"	ANY	NONE
	2" TO 6"	1:1.5 OR FLATTER	NONE
		STEEPER THAN 1:1.5	CHANNELIZING DEVICE
	GREATER THAN 6"	1:3 OR FLATTER	NONE
		STEEPER THAN 1:3	BARRIER
4' TO 10'	LESS THAN 6"	ANY	NONE
	6" TO 12"	1:3 OR FLATTER	NONE
		STEEPER THAN 1:3	BARRIER

NOTE:

1. ON BORDERLINE CONDITIONS, THE ENGINEER SHOULD DETERMINE WHICH TREATMENT IS ADEQUATE FOR THE EXISTING CONDITIONS.

GENERAL NOTES:

1. THESE CONDITIONS AND TREATMENTS ARE ONLY PART OF THE TRAFFIC CONTROL SYSTEM AND SHOULD BE USED IN ADDITION TO THE PROPER WORK ZONE SIGNING.
2. THE FOLLOWING ARE "MANUAL ON UNIFORM TRAFFIC CONTROL DEVICES" (MUTCD) COMPLIANT CHANNELIZING DEVICES:

   A. VERTICAL PANEL
   B. TYPE I OR TYPE II BARRICADE
   C. PLASTIC DRUM
   D. CONE - WHERE APPLICABLE
   E. TUBULAR MARKERS

   IF CHANNELIZING DEVICES ARE REQUIRED TO STAY IN PLACE DURING NIGHTTIME HOURS, THEY SHALL BE STABILIZED WHILE UNATTENDED IN ACCORDANCE WITH THE MUTCD.
3. WHERE BARRIER IS NECESSARY, THE BARRIER SHALL BE TAPERED BEYOND THE CLEAR ZONE. WHEN THE BARRIER CANNOT BE TAPERED BEYOND THE CLEAR ZONE, A MUTCD COMPLIANT END TREATMENT SHALL BE USED. BARRIER AND END TREATMENT SHALL MEET "NATIONAL COOPERATIVE HIGHWAY RESEARCH PROGRAM" (NCHRP) REPORT 350 OR THE "AMERICAN ASSOCIATION OF STATE HIGHWAY AND TRANSPORTATION OFFICIALS" (AASHTO) "MANUAL FOR ASSESSING SAFETY HARDWARE" (MASH). THE APPROPRIATE RESOURCE SHALL BE DETERMINED AS DESCRIBED IN THE MASH PUBLICATION.
4. CHANNELIZING DEVICE SPACING ALONG A LONGITUDINAL DROP-OFF (TANGENT) SHALL BE AS FOLLOWS:

   TANGENT - CHANNELIZING DEVICES SHALL BE SPACED "2S" ("S" IS EQUAL TO THE POSTED SPEED LIMIT IN FEET) APART.
5. "LOW SHOULDER" (W8-9) AND "SHOULDER DROP-OFF SYMBOL" (W8-17) SIGNS, WHEN USED, SHOULD BEGIN PRIOR TO THE DROP-OFF CONDITION AND SHOULD BE REPEATED EVERY 1500 FEET.

OTHER STDS. REQUIRED: T-1

REVISIONS AND CORRECTIONS

AUG. 6, 2012 - ORIGINAL APPROVAL DATE

APPROVED

HIGHWAY SAFETY & DESIGN ENGINEER

DIRECTOR OF PROGRAM DEVELOPMENT

Mark D. Richter

FEDERAL HIGHWAY ADMINISTRATION

CONSTRUCTION ZONE LONGITUDINAL DROP-OFFS FOR PAVING

VERMONT AGENCY OF TRANSPORTATION

STANDARD

T-36

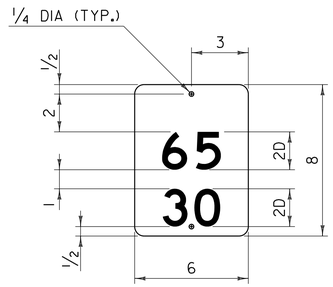

INTERSTATE MILEPOST PLAQUE

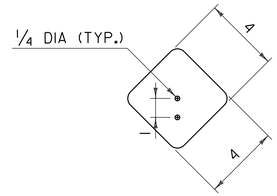

TYPE I DELINEATOR

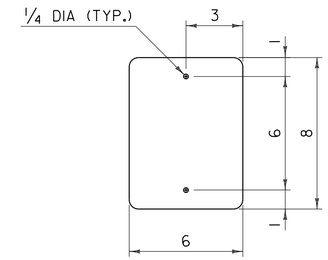

TYPE II DELINEATOR

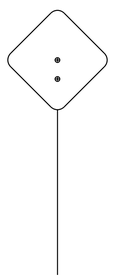

TYPE I

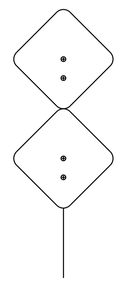

TYPE I – U-TURNS

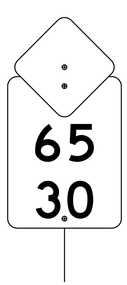

WHITE TYPE I
WITH MILEPOST PLAQUE

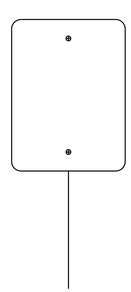

TYPE II

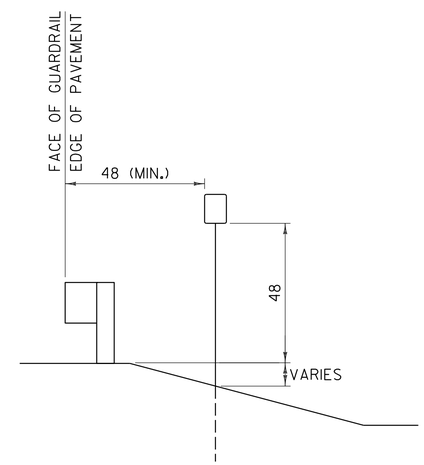

INSTALLATION DETAIL*

• INSTALLATION DETAIL APPLICABLE TO ALL DELINEATOR ASSEMBLIES

GENERAL NOTES:

1. THE FIRST LINE OF TEXT ON INTERSTATE MILEPOST PLAQUES INDICATES THE WHOLE NUMBER MILEAGE FROM THE BEGINNING OF A ROUTE. MILEAGE IS ALWAYS MEASURED TRAVELING FROM THE SOUTH TO NORTH OR FROM THE WEST TO EAST. THE ROUTE DIRECTION IS ESTABLISHED USING THE VERMONT AGENCY OF TRANSPORTATION (VAOT) ROUTE LOGS.
2. THE SECOND LINE OF TEXT ON INTERSTATE MILEPOST PLAQUES INDICATES THE ADDITIONAL MILEAGE, IN HUNDREDTHS, FROM THE BEGINNING OF A ROUTE. MILEAGE IS ALWAYS MEASURED TRAVELING FROM THE SOUTH TO NORTH OR FROM THE WEST TO EAST. THE ROUTE DIRECTION IS ESTABLISHED USING THE VAOT ROUTE LOGS.
3. THE INTERSTATE MILEPOST PLAQUE SHALL BE GREEN RETROREFLECTIVE LEGEND ON A WHITE RETROREFLECTIVE BACKGROUND AND SHALL HAVE RETROREFLECTIVE SHEETING EQUAL TO OR EXCEEDING "AMERICAN ASSOCIATION OF STATE HIGHWAY AND TRANSPORTATION OFFICIALS" (AASHTO) M 268 ["AMERICAN SOCIETY FOR TESTING AND MATERIALS" (ASTM) D 4956] TYPE III.
4. ALL LINES OF TEXT SHALL BE CENTERED HORIZONTALLY AND SHALL BE AS IDENTIFIED IN THE PLANS.
5. THE INTERSTATE MILEPOST PLAQUE AND DELINEATOR BASE MATERIAL SHALL BE 0.063 INCH FLAT SHEET ALUMINUM.
6. CORNERS SHALL BE ROUNDED TO A 1/2 INCH RADIUS.
7. A TYPE III DELINEATOR CONSISTS OF A TYPE I DELINEATOR FACING THE NORMAL DIRECTION OF TRAVEL AND A SINGLE RED TYPE I DELINEATOR FACING THE OPPOSITE DIRECTION. THE WHITE DELINEATOR AND RED DELINEATOR COMBINATION IS PLACED ON THE DRIVER'S RIGHT AND THE AMBER DELINEATOR AND RED DELINEATOR COMBINATION ON THE DRIVER'S LEFT.
8. DELINEATORS SHALL HAVE WHITE, GREEN, OR BLUE RETROREFLECTIVE SHEETING EQUAL TO OR EXCEEDING AASHTO M 268 ASTM D 4956 TYPE III, OR RED OR YELLOW RETROREFLECTIVE SHEETING EQUAL TO OR EXCEEDING AASHTO M 268 ASTM D 4956 TYPE VII, VIII, OR IX.
9. A SINGLE 14 GAGE, 1.75 INCH SQUARE STEEL POST AND 12 GAGE, TWO INCH SQUARE ANCHOR SHALL BE USED FOR INSTALLATION. THE ANCHOR SHALL BE A MINIMUM OF 30 INCHES IN LENGTH.
10. THE TOP OF POST SHALL BE ONE INCH ABOVE THE UPPER HOLE FOR ALL TYPE I DELINEATORS.
11. THE TOP OF POST SHALL BE FLUSH WITH THE TOP OF ALL TYPE II DELINEATORS.
12. ALL DIMENSIONS SHOWN IN INCHES.

OTHER STDS. REQUIRED: **T–45**

REVISIONS AND CORRECTIONS

JAN. 2, 2013 - ORIGINAL APPROVAL DATE

APPROVED

HIGHWAY SAFETY & DESIGN ENGINEER

DIRECTOR OF PROGRAM DEVELOPMENT

Mark D. Richter

FEDERAL HIGHWAY ADMINISTRATION

DELINEATORS AND MILEPOSTS

VERMONT AGENCY OF TRANSPORTATION

STANDARD

T-40

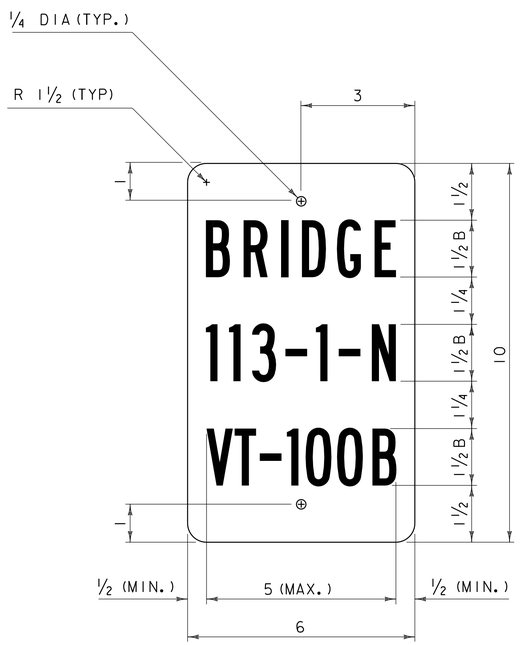

VD-701

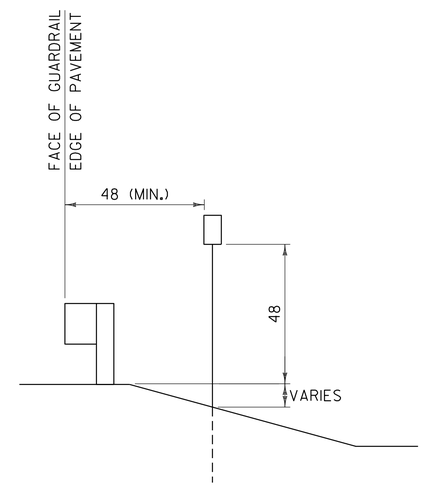

VD-701 INSTALLATION DETAIL

GENERAL NOTES:

1. BRIDGE NUMBER PLAQUES ARE TO BE INSTALLED ALONG THE FEDERAL AID HIGHWAY SYSTEM INCLUDING ALL STATE HIGHWAYS AND TOWN HIGHWAYS ON THE FEDERAL AID HIGHWAY SYSTEM.
2. BRIDGE NUMBER PLAQUES SHALL BE LOCATED ON BOTH BRIDGE APPROACHES AT THE NEAREST VISIBLE LOCATION.
3. THE SIGN BASE MATERIAL SHALL BE 0.063 INCH FLAT SHEET ALUMINUM.
4. THE SIGN SHALL BE WHITE RETROREFLECTIVE LEGEND ON A GREEN RETROREFLECTIVE BACKGROUND, BOTH SHALL HAVE RETROREFLECTIVE SHEETING EQUAL TO OR EXCEEDING "AMERICAN ASSOCIATION OF STATE HIGHWAY AND TRANSPORTATION OFFICIALS" (AASHTO) M 268 ["AMERICAN SOCIETY FOR TESTING AND MATERIALS" (ASTM) D 4956] TYPE III.
5. THE SECOND LINE OF TEXT INDICATES THE BRIDGE NUMBER. THE BRIDGE NUMBER CAN BE OBTAINED USING THE VERMONT AGENCY OF TRANSPORTATION (VAOT) ROUTE LOGS OR BY CONSULTING WITH THE VAOT STRUCTURES SECTION.
6. THE THIRD LINE OF TEXT INDICATES THE STATE ROUTE NUMBER. IN ALL CASES THIS WILL BE DEPICTED USING THE LETTER ABBREVIATION, FOLLOWED BY A HYPHEN, FOLLOWED BY THE ROUTE NUMBER. FOR EXAMPLE US ROUTE 2 WOULD BE IDENTIFIED USING US-2.
7. THE SECOND AND THIRD LINES OF TEXT SHALL BE CENTERED HORIZONTALLY AND SHALL BE AS DEFINED IN THE PLANS.
8. A SINGLE 14 GAGE, 1.75 INCH SQUARE STEEL POST AND 12 GAGE, TWO INCH SQUARE ANCHOR SHALL BE USED FOR INSTALLATION. THE ANCHOR SHALL BE A MINIMUM OF 30 INCHES IN LENGTH.
9. ALL DIMENSIONS SHOWN IN INCHES.

OTHER STDS. REQUIRED: **T-45**

REVISIONS AND CORRECTIONS

APRIL 9, 2014 - ORIGINAL APPROVAL DATE

APPROVED

HIGHWAY SAFETY & DESIGN ENGINEER

DIRECTOR OF PROGRAM DEVELOPMENT

Mark D. Richter

FEDERAL HIGHWAY ADMINISTRATION

BRIDGE NUMBER PLAQUE

VERMONT AGENCY OF TRANSPORTATION

STANDARD

T-42

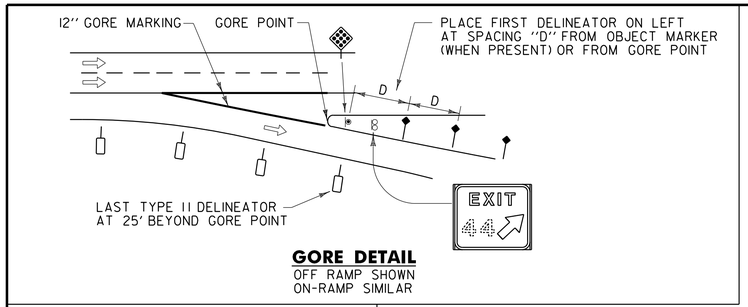

GORE DETAIL
OFF RAMP SHOWN
ON-RAMP SIMILAR

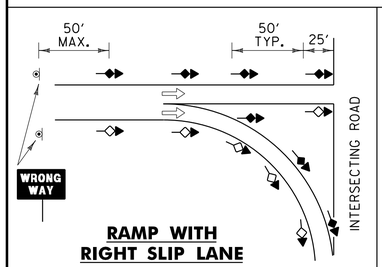

RAMP WITH RIGHT SLIP LANE

TYPICAL SPACING FOR TYPE I (RAMP) DELINEATORS ON HORIZONTAL CURVES (FROM MUTCD TABLE 3F-1)

RADIUS OF CURVE (IN FEET)	SPACING ON OUTSIDE OF CURVE (IN FEET) (D)	APPROX SPEED
50	20	
150	30	25 MPH
200	35	
250	40	30 MPH
300	50	
400	55	40 MPH
500	65	
600	70	
700	75	50 MPH
800	80	
900	85	
1000	90	
TANGENT	100	

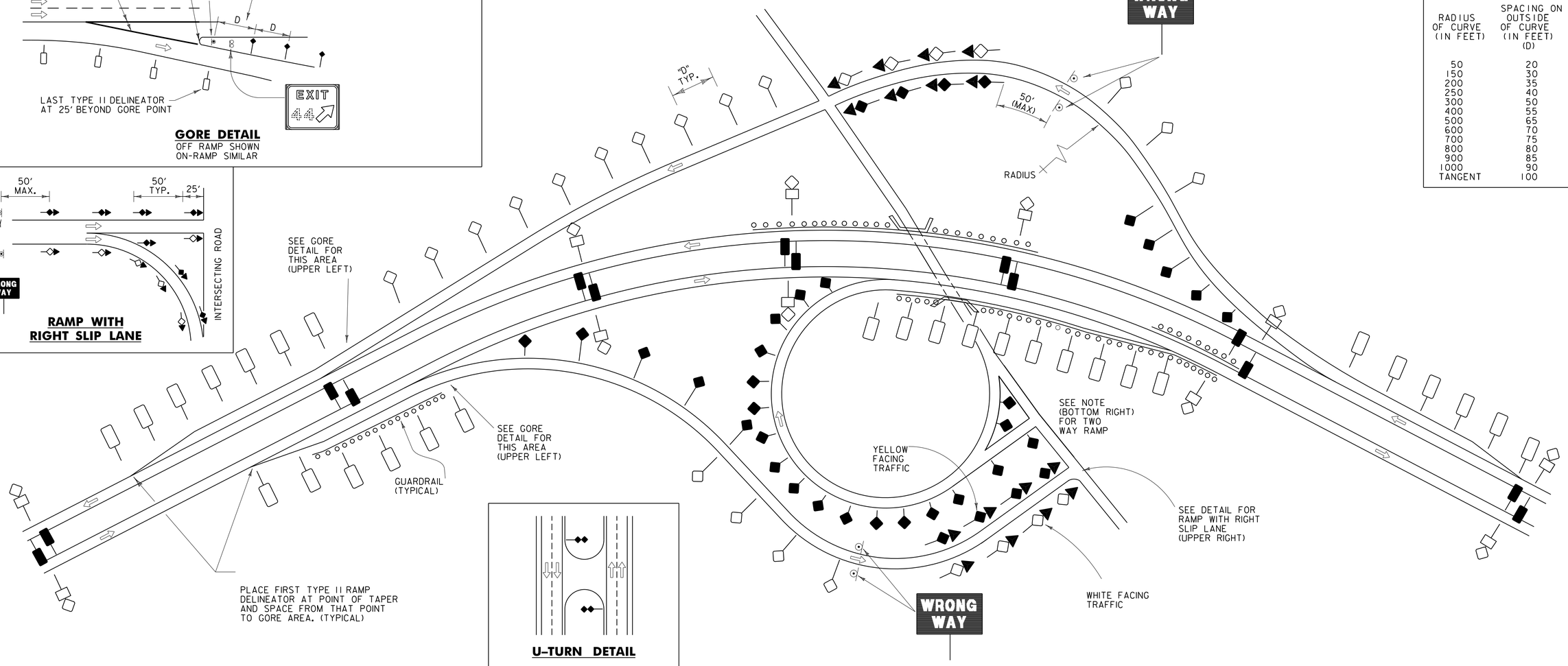

U-TURN DETAIL

LEGEND

YELLOW OR WHITE — TYPE I DELINEATOR

TYPE I (WHITE) WITH MILEPOST PLAQUE

TWO VERTICALLY STACKED TYPE I (YELLOW)

RED ON BACK WHITE / RED ON BACK YELLOW — A TYPE III DELINEATOR CONSISTS OF A TYPE I DELINEATOR FACING THE NORMAL DIRECTION OF TRAVEL AND A TYPE I RED DELINEATOR FACING THE OPPOSITE DIRECTION.

YELLOW OR WHITE — TYPE II DELINEATOR

DIRECTION OF TRAVEL

MAINLINE DELINEATORS

TYPE I DELINEATORS WITH APPROPRIATE MILEPOST PLAQUES SHALL BE ERECTED CONTINUOUSLY ALONG THE RIGHT SIDE OF DIVIDED HIGHWAYS BETWEEN MILEMARKER SIGNS, AT 0.05 MILE INTERVALS.

TYPE II YELLOW DELINEATORS SHALL BE ERECTED CONTINUOUSLY ALONG THE LEFT SIDE OF DIVIDED HIGHWAYS, CONTINUED AT APPROXIMATELY THE SAME SPACING THROUGH INTERCHANGES AND REST AREAS WHERE THERE MAY NOT BE ANY TYPE I DELINEATORS ON THE RIGHT SIDE. PLACEMENT OF TYPE II DELINEATORS SHALL BE FOLLOWED ON THE LEFT AS ON THE RIGHT, AT 0.05 MILE INTERVALS.

MAINLINE DELINEATORS ON THE RIGHT SIDE SHALL BE OMITTED ALONG THE DECELERATION AND ACCELERATION LANES, HOWEVER THE SUCCEEDING SPACING SHALL BE AS IF THE PLAQUES HAD BEEN ERECTED CONTINUOUSLY.

U-TURN DELINEATORS SHALL BE PLACED WHERE THE U-TURN RADII MEETS THE TANGENT OF THE MAINLINE.

PLACEMENT NOTES

TYPE I (RAMPS)

TYPE I DELINEATORS ARE TO BE PLACED ON THE OUTSIDE OF RAMP CURVES AND ON THE DRIVERS RIGHT ON TANGENTS AT THE APPROPRIATE SPACING FOR CURVE RADIUS OR RAMP SPEED AS SHOWN ON THE CHART (UPPER RIGHT). YELLOW DELINEATORS ARE REQUIRED ON THE DRIVER'S LEFT AND WHITE DELINEATORS ON THE RIGHT. DELINEATORS SHALL NOT BE OMITTED BEHIND GUARDRAIL ON THE RAMPS.

TYPE II

TYPE II DELINEATORS SHALL BE ERECTED CONTINUOUSLY ALONG THE RIGHT SIDE OF ACCELERATION AND DECELERATION LANES AT 100 FOOT INTERVALS AND SHALL NOT BE OMITTED BEHIND GUARDRAIL.

TYPE III

TYPE III DELINEATORS SHALL BE PLACED BEGINNING 25 FEET FROM THE INTERSECTING ROADWAY AND EXTENDING TO THE "WRONG WAY" SIGNS ALONG RAMPS AT 50' INTERVALS. THE "WRONG WAY" SIGNS ARE TYPICALLY 250 FEET FROM THE INTERSECTING ROADWAY.

WHEN THE TRAVEL LANES FOR A TWO WAY RAMP ARE SEPARATED BY ONLY A NARROW MEDIAN AND THERE IS A LIKELIHOOD VEHICLES ON THE ON-RAMP COULD BE CONFUSED BY THE RED REFLECTOR OF THE TYPE III DELINEATORS FOR THE ADJACENT OFF-RAMP, THE TYPE III ASSEMBLY ON THAT SIDE SHOULD BE OMITTED.

OTHER STDS. REQUIRED: T-40, T-45

REVISIONS AND CORRECTIONS

APRIL 9, 2014 - ORIGINAL APPROVAL DATE

APPROVED

HIGHWAY SAFETY & DESIGN ENGINEER

DIRECTOR OF PROGRAM DEVELOPMENT

Mark D. Richter

FEDERAL HIGHWAY ADMINISTRATION

FREEWAY - EXPRESSWAY DELINEATOR PLACEMENT

VERMONT AGENCY OF TRANSPORTATION

STANDARD

T-43

POST AND ANCHOR SELECTION CHART

POST SIZE (IN.)	POST THICKNESS (IN.)	POST WEIGHT (LBS/FT.)	POST GAGE	SECTION MODULUS ($IN.^3$)	ONE POST SV	TWO POST SV	THREE POST SV	POSTS PERMITTED IN 8' PATH	ANCHOR SIZE (IN.)	ANCHOR GAGE	MINIMUM ANCHOR LENGTH
1.75	.083	1.88	14	0.222	45	90	135	TWO	2.00	12	30
2.00	.109	2.42	12	0.393	80	160	240	TWO	2.25	12	48
2.50	.109	3.35	12	0.673	137	274	411	ONE	3.00	7	48

NOTES:

1. ALL SIGN POSTS SHALL HAVE 7/16 INCH HOLES EVERY ONE INCH ON CENTER (ALL FOUR SIDES).
2. THE NUMBER OF SIGN POSTS PERMITTED WITHIN AN EIGHT FOOT PATH ASSUMES THAT THE SIGN ASSEMBLY IS NOT PROTECTED BY GUARDRAIL OR IS LOCATED WITHIN A GUARDRAIL'S DEFLECTION DISTANCE DETERMINED PER THE CURRENT "AMERICAN ASSOCIATION OF STATE HIGHWAY AND TRANSPORTATION OFFICIALS" (AASHTO) ROADSIDE DESIGN GUIDE. ADDITIONAL POSTS MAY BE INSTALLED USING SLIP BASES THAT MEET "NATIONAL COOPERATIVE HIGHWAY RESEARCH PROGRAM" (NCHRP) REPORT 350 OR THE AASHTO "MANUAL FOR ASSESSING SAFETY HARDWARE" (MASH). THE APPROPRIATE RESOURCE SHALL BE DETERMINED AS DESCRIBED IN THE MASH PUBLICATION.
3. TO USE THE SELECTION VALUE (SV) COLUMNS IN THE TABLE ABOVE, MULTIPLY A SIGN'S SURFACE AREA IN SQUARE FEET (H x L) BY THE SIGN'S HEIGHT IN FEET MEASURED FROM THE GROUND TO THE CENTROID OF THE SIGN ASSEMBLY (h). THIS RESULT MUST BE LESS THAN OR EQUAL TO THE CORRESPONDING SELECTION VALUE. NOTE THAT FOR SIGNS WITH MULTIPLE POSTS, THE LARGEST HEIGHT DIMENSION SHALL BE USED TO CALCULATE THE POST SELECTION VALUE.
4. THE DESIGN CRITERIA UTILIZED IN SIGN POST AND ANCHOR SELECTION IS AS FOLLOWS: WIND SPEED OF 70 MPH (10 YEAR MEAN RECURRENCE INTERVAL), WIND PRESSURE OF 19 PSF, STEEL MINIMUM YIELD OF 55,000 PSI, AND AN ALLOWABLE STRESS OF 1.4 (0.60 FY).

CORNER BOLT INSTALLATION DETAIL

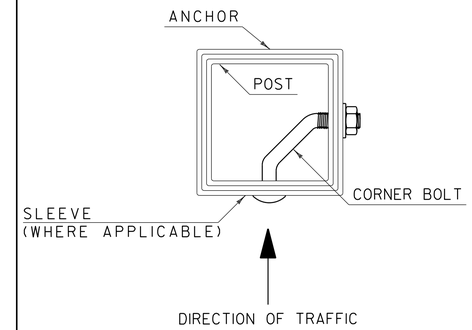

NOTES:

1. CORNER BOLTS SHALL BE 5/16 INCH DIAMETER WITH 18 THREADS PER INCH AND DIMENSIONS SHALL BE DETERMINED BASED ON THE OUTERMOST DIMENSION OF THE SLEEVE, ANCHOR OR POST. THREAD EXPOSURE MUST EXCEED THE CORRESPONDING NUT WIDTH. THE CORNER BOLT AND CORRESPONDING HARDWARE SHALL BE ZINC PLATED, MEETING OR EXCEEDING THE REQUIREMENTS OF THE "AMERICAN SOCIETY FOR TESTING AND MATERIALS" (ASTM) A307.

SLEEVE /ANCHOR INSTALLATION DETAIL

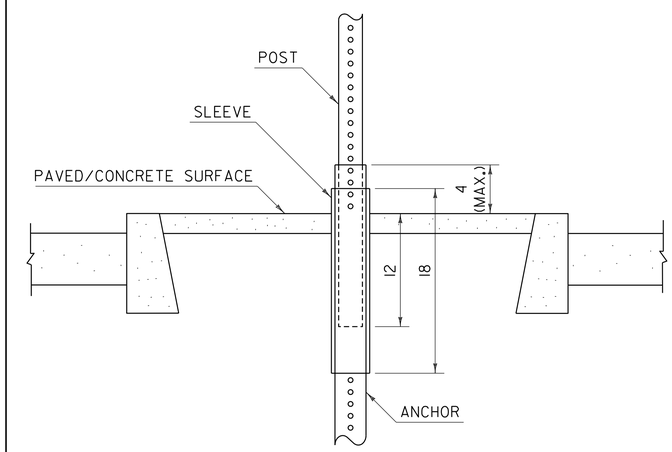

NOTES:

1. A SLEEVE SHALL BE INSTALLED FOR SIGN INSTALLATIONS IN CONCRETE OR PAVEMENT.
2. THE SLEEVE SHALL BE 18 INCHES MINIMUM IN LENGTH.
3. THREE INCH SLEEVES THAT DO NOT HAVE HOLES WILL REQUIRE THAT 7/16 INCH HOLES ARE DRILLED TO FACILITATE CONNECTIONS.
4. REFER TO CURRENT EDITION OF THE "VERMONT AGENCY OF TRANSPORTATION STANDARD SPECIFICATIONS FOR CONSTRUCTION" FOR MATERIAL REQUIREMENTS.

POST SPACING DETAILS

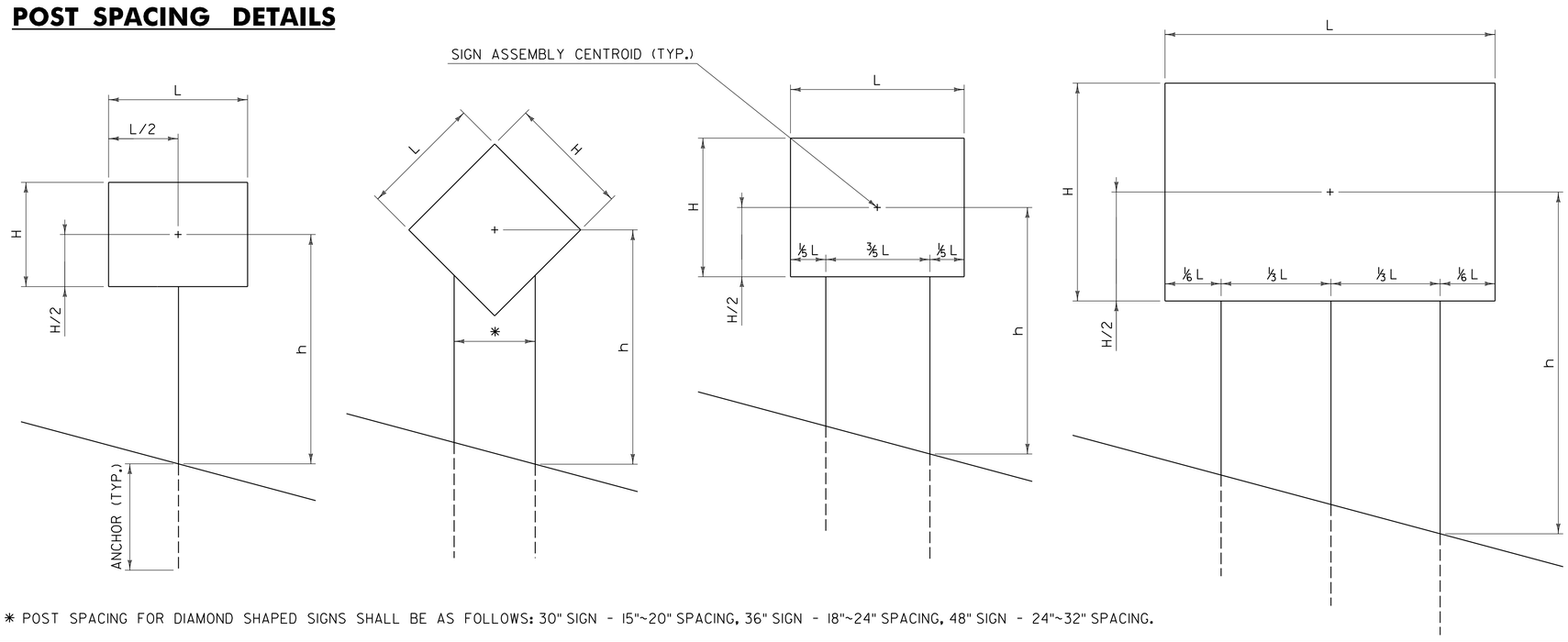

* POST SPACING FOR DIAMOND SHAPED SIGNS SHALL BE AS FOLLOWS: 30" SIGN - 15"~20" SPACING, 36" SIGN - 18"~24" SPACING, 48" SIGN - 24"~32" SPACING.

GENERAL NOTES:

1. ALL SQUARE TUBE STEEL POSTS AND ANCHORS SHALL BE FORMED INTO A SIZE AND SHAPE IN SUCH A MANNER THAT NEITHER FLASH NOR WELD SHALL INTERFERE WITH THE TELESCOPING PROPERTIES, NOR DAMAGE THE GALVANIZING.
2. ANCHORS MAY BE DRIVEN OR SET INTO A DUG HOLE AND BACKFILLED. IF DRIVEN, A DRIVING CAP SHALL BE USED. THE DUG HOLE INSTALLATION METHOD SHALL BE UTILIZED IN AREAS WITH POOR SOIL CONDITIONS OR AS DIRECTED BY THE ENGINEER. BACKFILL SHALL BE COMPACTED AS DIRECTED BY THE ENGINEER.
3. THE TOPS OF SIGN POSTS SHALL BE AT OR NEAR THE TOP OF SIGN. THE POST SHALL NOT EXTEND ABOVE THE TOP OF SIGN.
4. SIGN POSTS SHALL BE INSTALLED A MINIMUM OF ONE FOOT BELOW GROUND, INSIDE THE ANCHOR. THE LENGTH OF ANCHOR EXPOSED ABOVE GROUND SHALL NOT EXCEED FOUR INCHES.
5. ALL DIMENSIONS SHOWN IN INCHES.

OTHER STDS. REQUIRED: **NONE**

REVISIONS AND CORRECTIONS

JAN. 2, 2013 - ORIGINAL APPROVAL DATE

APPROVED

HIGHWAY SAFETY & DESIGN ENGINEER

DIRECTOR OF PROGRAM DEVELOPMENT

Mark D. Richter

FEDERAL HIGHWAY ADMINISTRATION

SQUARE TUBE SIGN POST AND ANCHOR

VERMONT AGENCY OF TRANSPORTATION

STANDARD

T-45

CONCRETE GENERAL NOTES

1. ALL EXPOSED EDGES OF CONCRETE SHALL BE CHAMFERED 1" x 1"
2. REINFORCING STEEL SIZE AND SPACING SHOWN IN THE PLANS IS BASED ON 60 KSI STEEL, UNLESS NOTED OTHERWISE. WITH THE ENGINEER'S PERMISSION, BAR SIZE AND SPACING MAY BE MODIFIED ACCORDING TO THE LATEST AASHTO LRFD BRIDGE DESIGN SPECIFICATION AND STRUCTURES DESIGN MANUAL WHEN USING HIGHER STRENGTH STEEL.

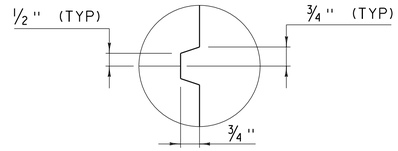

SCORE MARK DETAIL
(NOT TO SCALE)

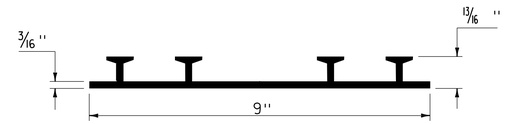

P.V.C. WATERSTOP FOR CONSTRUCTION JOINTS
(NOT TO SCALE)

PAYMENT FOR THE P.V.C. WATERSTOP SHALL BE INCIDENTAL TO THE UNIT BID PRICE FOR THE ADJACENT CONCRETE.

OTHER CONFIGURATIONS OF WATERSTOP MAY BE USED UPON APPROVAL OF THE ENGINEER.

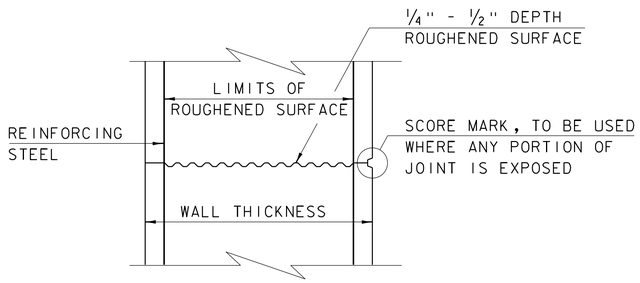

TYPICAL HORIZONTAL CONSTRUCTION JOINT
(NOT TO SCALE)

1. THE SURFACE OF THE CONCRETE CONSTRUCTION JOINTS SHALL BE CLEANED AND FREE OF LAITANCE.
2. IMMEDIATELY BEFORE NEW CONCRETE IS PLACED, ALL CONSTRUCTION JOINTS SHALL BE WETTED AND STANDING WATER REMOVED.

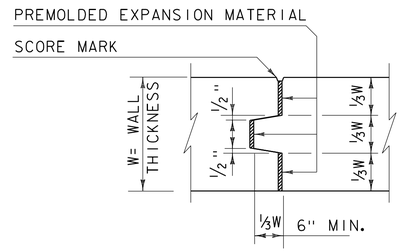

TYPICAL CONCRETE EXPANSION JOINT
(NOT TO SCALE)

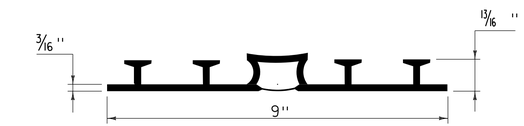

P.V.C. WATERSTOP FOR EXPANSION JOINTS
(NOT TO SCALE)

PAYMENT FOR THE P.V.C. WATERSTOP SHALL BE INCIDENTAL TO THE UNIT BID PRICE FOR THE ADJACENT CONCRETE.

OTHER CONFIGURATIONS OF WATERSTOP MAY BE USED UPON APPROVAL OF THE ENGINEER.

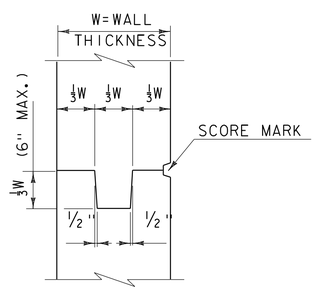

TYPICAL CONCRETE CONSTRUCTION JOINT
(NOT TO SCALE)

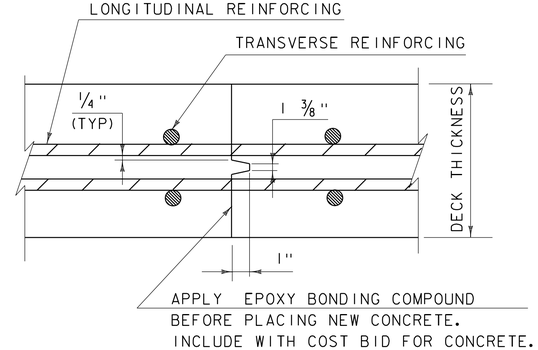

TRANSVERSE BRIDGE SLAB CONSTRUCTION JOINT DETAILS
(NOT TO SCALE)

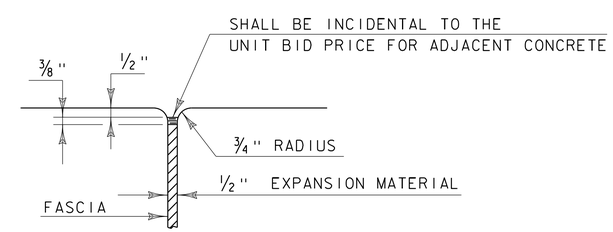

JOINT BETWEEN FASCIA AND WINGWALL
(NOT TO SCALE)

REVISIONS	
MAY 7, 2010	APPROVED FOR USE BY VAOT STRUCTURES SECTION
FEBRUARY 9, 2012	REBAR SUBSTITUTION ALLOWANCE ADDED TO CONCRETE GENERAL NOTES.

CONCRETE DETAILS AND NOTES

VERMONT AGENCY OF TRANSPORTATION
STRUCTURES SECTION

STRUCTURES DETAIL
SD-501.00

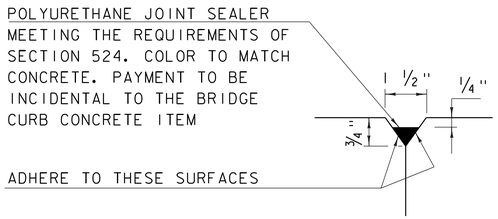

DETAIL "B"
(NOT TO SCALE)

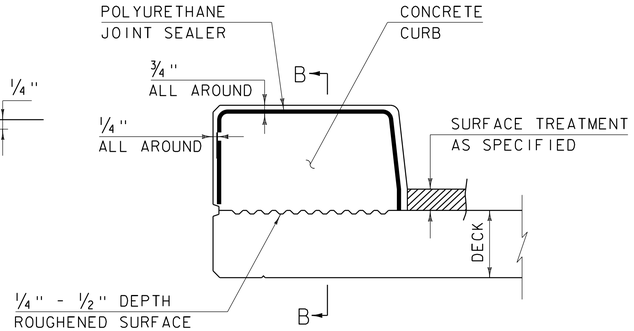

CONCRETE CURB JOINT SECTION
(NOT TO SCALE)

1. SEE TYPICAL HORIZONTAL CONSTRUCTION JOINT DETAIL FOR ADDITIONAL INFORMATION

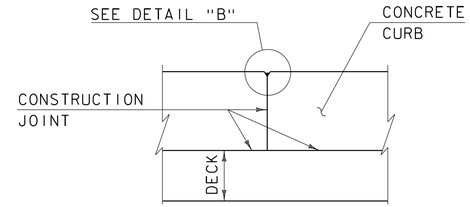

SECTION B - B
(NOT TO SCALE)

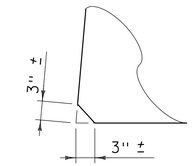

ACUTE ANGLE CLIP DETAIL
(NOT TO SCALE)

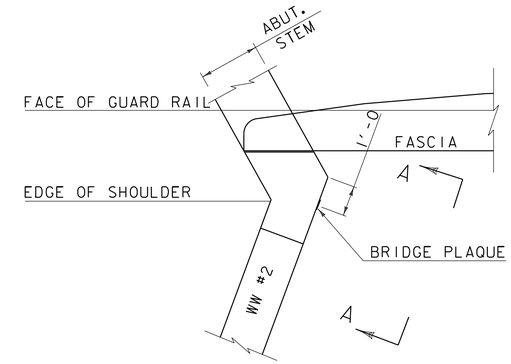

PLAN

CONCRETE CURB JOINT NOTES

1. CONCRETE CURBS MAY BE PLACED IN ONE CONTINUOUS OPERATION IF AN APPROVED SHRINKAGE REDUCING ADMIXTURE LISTED IN THE SPECIAL PROVISIONS IS USED WITH THE CONCRETE MIX DESIGN. PAYMENT FOR THE SHRINKAGE REDUCING ADMIXTURE WILL BE INCIDENTAL TO THE BRIDGE CURB CONCRETE ITEM.

2. IF THE CONTRACTOR CHOOSES NOT TO USE AN APPROVED SHRINKAGE REDUCING ADMIXTURE, THE CURBS SHALL BE CONSTRUCTED WITH CONSTRUCTION JOINTS SPACED AT A MAXIMUM OF 15'-0" CENTER TO CENTER AND 2'-0" MINIMUM FROM THE CENTER OF NEAREST BRIDGE RAILING POST.

3. ON MULTI-SPAN CONTINUOUS SUPERSTRUCTURES, REGARDLESS OF WHETHER APPROVED SHRINKAGE REDUCING ADMIXTURE IS USED, CURB JOINTS SHALL BE LOCATED OVER THE CENTERLINE OF PIERS AND 7'-0" EACH SIDE OF THE CENTERLINE OF EACH PIER.

4. WHEN CURB JOINTS ARE USED THE CURBS SHALL BE PLACED IN ALTERNATE SECTIONS WITH A MINIMUM OF 48 HOUR DELAY BETWEEN ADJACENT PLACEMENTS.

5. LONGITUDINAL REINFORCING SHALL BE CONTINUOUS THROUGH CURB CONSTRUCTION JOINTS. CURB STIRRUP BARS SHALL BE TURNED AS NECESSARY TO MAINTAIN COVER IN THE FLARED CURB ENDS.

6. THE JOINT SPACING AND DETAILS SHOWN SHALL APPLY TO SIDEWALKS WHEN SHOWN IN THE PLANS.

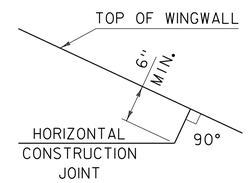

HORIZONTAL WINGWALL CONSTRUCTION JOINT
(NOT TO SCALE)

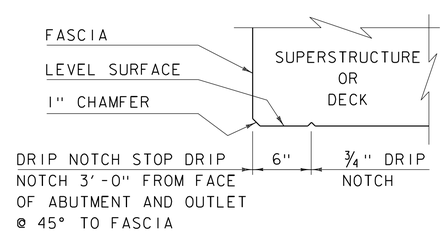

DRIP NOTCH DETAIL
(NOT TO SCALE)

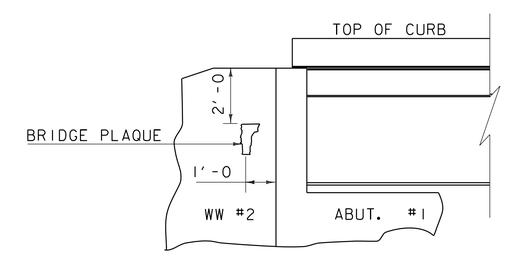

VIEW "A - A"

BRIDGE PLAQUE
(NOT TO SCALE)

THE BRIDGE PLAQUE WILL BE SUPPLIED BY THE AGENCY OF TRANSPORTATION AND SHALL BE INSTALLED BY THE CONTRACTOR AT ABUTMENT #1 ON THE RIGHT SIDE AS SHOWN OR AS DIRECTED BY THE ENGINEER.

PAYMENT FOR INSTALLATION OF THE BRIDGE PLAQUE SHALL BE INCIDENTAL TO THE ADJACENT CONCRETE.

REVISIONS

MAY 7, 2010	APPROVED FOR USE BY VAOT STRUCTURES SECTION
JUNE 4, 2010	MODIFIED AND ADDED TWO DETAILS
OCTOBER 10, 2012	MODIFIED HORZ. JOINT WINGWALL ADD 6" MIN. DIMENSION

CONCRETE DETAILS AND NOTES

VERMONT AGENCY OF TRANSPORTATION
STRUCTURES - SECTION

STRUCTURES DETAIL
SD-502.00

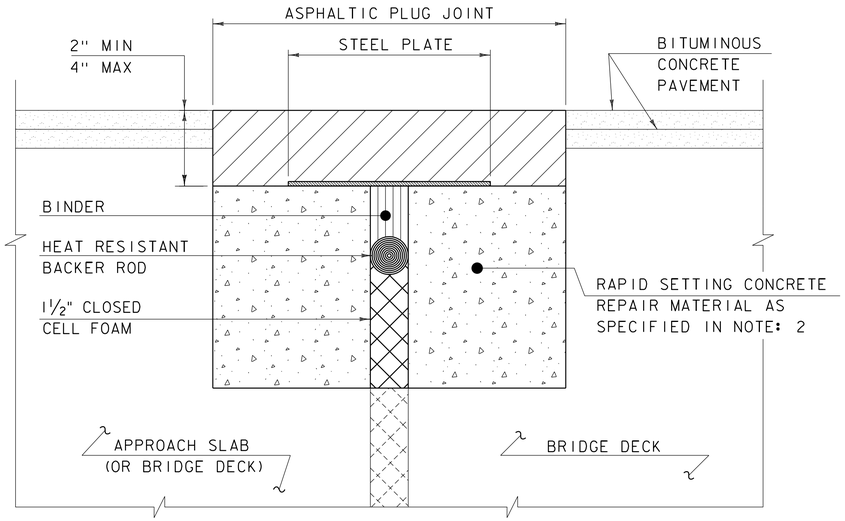

ASPHALTIC PLUG JOINT DETAIL - REHAB

NOTES:

1. THE CONTRACTOR SHALL REMOVE ALL ASPHALTIC PLUG JOINT MATERIAL AND DETERIORATED CONCRETE AS DIRECTED BY THE ENGINEER. REMOVAL OF THE FIRST 4 INCHES OF MATERIAL SHALL BE INCLUDED IN THE BID PRICE FOR ITEM 516.10 BRIDGE EXPANSION JOINT, ASPHALTIC PLUG. ANY REMOVAL OF MATERIAL GREATER THAN 4 INCHES SHALL BE INCLUDED IN THE BID PRICE OF ITEM 580.20 RAPID SETTING CONCRETE REPAIR MATERIAL WITH COARSE AGGREGATE.

2. THE CONTRACTOR SHALL REPLACE REMOVED MATERIAL THAT IS LESS THAN 4" FROM FINISHED GRADE WITH ASPHALTIC PLUG JOINT MATERIAL MEETING THE REQUIREMENTS OF SUBSECTION 707.15. ALL REMOVED MATERIAL THAT IS GREATER THAN 4 INCHES FROM FINISHED GRADE SHALL BE REPLACED WITH RAPID SETTING CONCRETE REPAIR MATERIAL WITH COARSE AGGREGATE MEETING THE REQUIREMENTS OF SUBSECTION 780.04.

3. REINFORCING STEEL NOT SHOWN FOR CLARITY.

4. PLACE 1/4" THICK BY 8" WIDE SECTIONS OF STEEL PLATE OVER THE CENTER OF THE MOVEMENT GAP. SECURE THE PLATES FROM MOVING BY INSERTING LOCATING PINS THROUGH THE PRE-STAMPED HOLES INTO BACKER ROD AND COVER WITH HOT BINDER. THE STEEL PLATES MAY BE OMITTED WHERE THE ENGINEER DETERMINES THAT THE APPROACH SLAB OR BRIDGE DECK WILL PROVIDE INADEQUATE SUPPORT AND WHERE VERTICAL MOVEMENT OF THE PLATES MIGHT OCCUR.

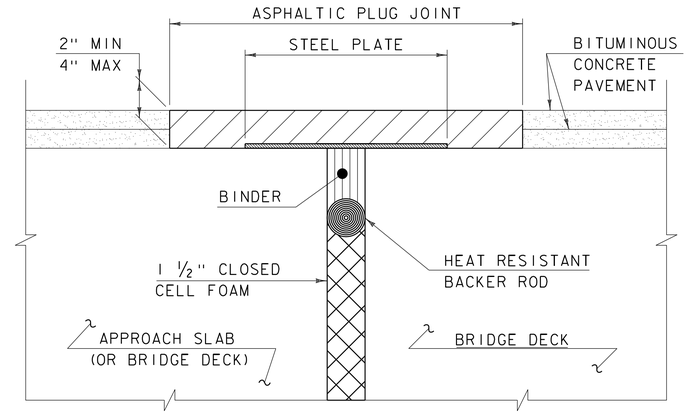

ASPHALTIC PLUG JOINT DETAIL "A" - NEW

NOTE:
PLACE 1/4" THICK BY 8" WIDE SECTIONS OF STEEL PLATE OVER THE CENTER OF THE MOVEMENT GAP. SECURE THE PLATES FROM MOVING BY INSERTING LOCATING PINS THROUGH THE PRE-STAMPED HOLES INTO BACKER ROD AND COVER WITH HOT BINDER.

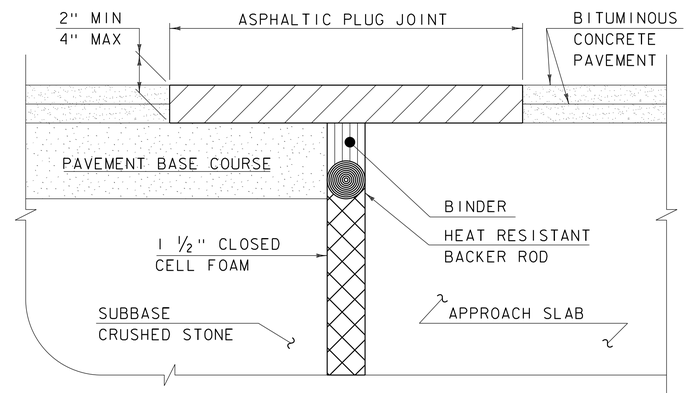

ASPHALTIC PLUG JOINT DETAIL "B" - NEW

ASPHALTIC PLUG JOINT NOTES

INSTALLATION:

1. LOCATE THE JOINT CENTRALLY OVER THE DECK OVERLAY EXPANSION GAP OR FIXED JOINT, MARKED OUT TO THE MANUFACTURER'S RECOMMENDED WIDTH.

2. REMOVE THE BITUMINOUS CONCRETE PAVEMENT FULL DEPTH AS SHOWN ON THE PLANS. THE PAVEMENT SHALL BE DRY AND SAW CUT TO THE LIMITS REQUIRED TO PLACE THE JOINT. A PNEUMATIC HAMMER AND CHISEL MAY BE USED ADJACENT TO THE CURB ONLY WHEN SAW CUTTING IS NOT POSSIBLE.

3. BLAST CLEAN THE JOINT AREA OF DEBRIS, ASPHALT AND SHEET MEMBRANE. THOROUGHLY DRY THE JOINT AREA WITH COMPRESSED AIR PRIOR TO APPLYING BINDER MATERIAL.

4. PLACE PROPERLY SIZED HEAT RESISTANT BACKER ROD IN THE MOVEMENT GAP ALLOWING FOR 1" +/- OF BINDER ABOVE THE ROD.

5. HEAT AND PLACE THE BINDER MATERIAL AS RECOMMENDED BY THE MANUFACTURER.

6. IMMEDIATELY AFTER TOP COATING, CAST AN ANTI-SKID MATERIAL OVER THE JOINT TO REDUCE THE RISK OF TRACKING.

WEATHER LIMITATIONS

APPLY BINDER MATERIAL ONLY WHEN THE FOLLOWING CONDITIONS PREVAIL OR AS RECOMMENDED BY THE MANUFACTURER:

1. THE AMBIENT AIR TEMPERATURE IS AT LEAST 10 DEG C (50 DEG F) AND RISING.

2. THE ROAD SURFACE IS DRY.

3. WEATHER CONDITIONS OR OTHER CONDITIONS ARE FAVORABLE AND ARE EXPECTED TO REMAIN SO FOR THE PERFORMANCE OF SATISFACTORY WORK.

DETAILS ON THIS SHEET ARE NOT TO SCALE.

REVISIONS	
MAY 7, 2010	APPROVED FOR USE BY VAOT STRUCTURES SECTION
AUGUST 29, 2011	ADD DETAIL "B" AND REV. NOTES

BRIDGE JOINT
ASPHALTIC PLUG

VERMONT AGENCY OF TRANSPORTATION
STRUCTURES - DIVISION

STRUCTURES DETAIL

SD-516.10

STRUCTURAL STEEL GENERAL NOTES:

1. ALL FIELD CONNECTIONS SHALL BE MADE WITH 7/8" DIAMETER HIGH-STRENGTH BOLTS IN 15/16" DIAMETER HOLES, PER SUBSECTION 506.19, UNLESS OTHERWISE SPECIFIED.
2. ALL HOLES IN THE WEBS OF THE FASCIA GIRDERS THAT ARE NOT OTHERWISE FILLED, SHALL BE FILLED WITH EITHER BUTTON HEAD OR HEX HEAD BOLTS. THESE BOLTS SHALL BE TIGHTENED IN ACCORDANCE WITH SUBSECTION 506.19.
3. ALL WELDING SHALL CONFORM TO THE PROVISIONS OF SUBSECTION 506.10.
4. ANY CONNECTIONS THAT ARE NOT DETAILED ON THE PLANS SHALL BE DETAILED BY THE FABRICATOR AND SUBMITTED TO THE STRUCTURES ENGINEER FOR APPROVAL.
5. STRUCTURAL STEEL MEMBERS DESIGNATED "CVN" IN THE PLANS SHALL BE CHARPY V-NOTCH TESTED IN ACCORDANCE WITH SUBSECTION 714.01 OF THE STANDARD SPECIFICATIONS.
6. ENDS OF GIRDERS ARE TO BE VERTICAL IN THEIR FINAL POSITION.
7. AFTER SUPERSTRUCTURE STEEL HAS BEEN ERECTED, ELEVATIONS ALONG THE TOP OF THE GIRDERS SHALL BE TAKEN AS DIRECTED BY THE RESIDENT ENGINEER FOR USE IN DETERMINING FINISHED GRADES.

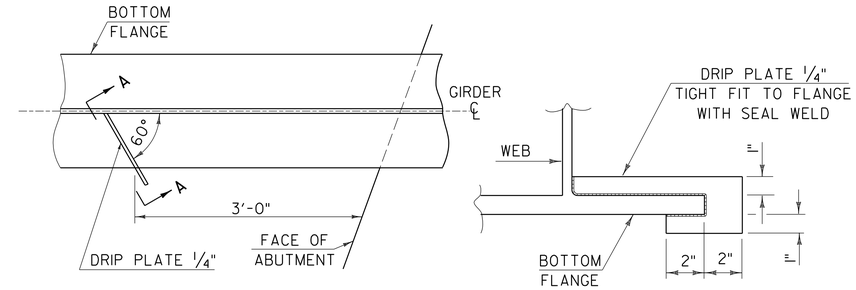

PLAN DRIP PLATE

SECTION A - A

NOTE: DRIP PLATES SHALL BE PLACED ON OUTSIDE EDGE OF FASCIA GIRDERS ON THE HIGH SIDE OF ALL PIERS AND ABUTMENTS OR AS INDICATED ON PROJECT PLANS.

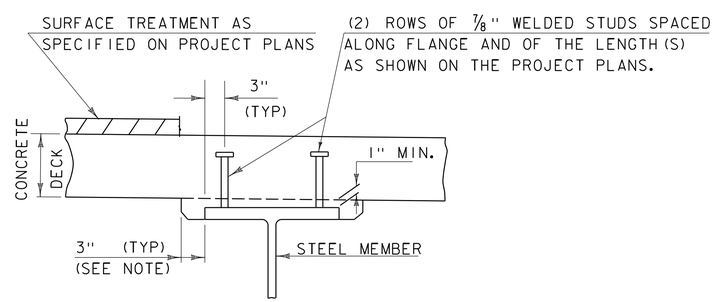

NOTE:
THE 3" HORIZONTAL SECTION MAY BE ELIMINATED FOR FORMING SYSTEMS DESIGNED FOR THE CONSTRUCTION OF VERTICAL HAUNCHES. ANY VOIDS RESULTING FROM FORMING SYSTEM ELEMENTS SHALL BE FILLED WITH JOINT SEALER, POLYURETHANE MEETING THE REQUIREMENTS OF SECTION 524. THE COST OF THE JOINT SEALER, POLYURETHANE SHALL BE INCIDENTAL TO THE ADJACENT CONCRETE.

HAUNCH AND SHEAR CONNECTOR DETAIL

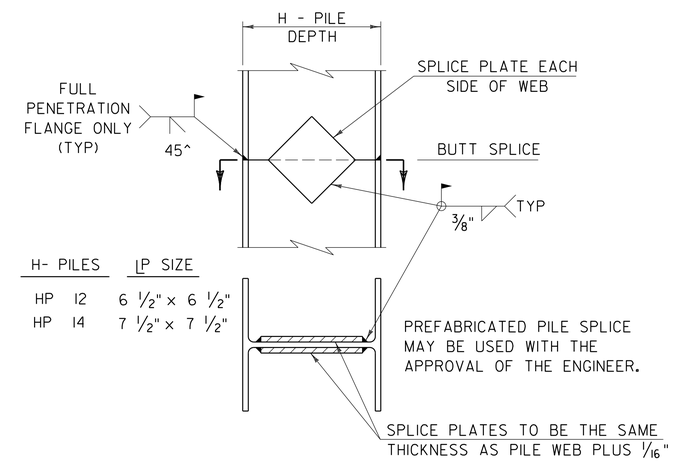

DETAIL OF PILE SPLICE

DETAILS ON THIS SHEET ARE "NOT TO SCALE" UNLESS NOTED OTHERWISE.

REVISIONS	
MAY 7, 2010	APPROVED FOR USE BY VAOT STRUCTURES SECTION
JUNE 4, 2010	MODIFIED NOTES

STRUCTURAL STEEL DETAILS & NOTES

VERMONT AGENCY OF TRANSPORTATION
STRUCTURES - SECTION

STRUCTURES DETAIL

SD-601.00

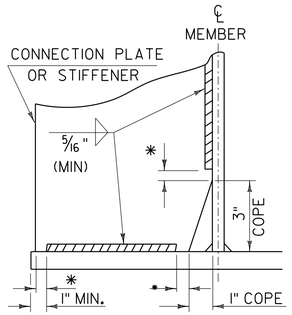

WELD TERMINATION AND COPING DETAILS FOR STEEL MEMBERS

*NO WELD FOR 3/8" MIN. 7/8" MAX. (EXCEPT MUST MAINTAIN 1" MINIMUM FROM EDGE OF FLANGE)

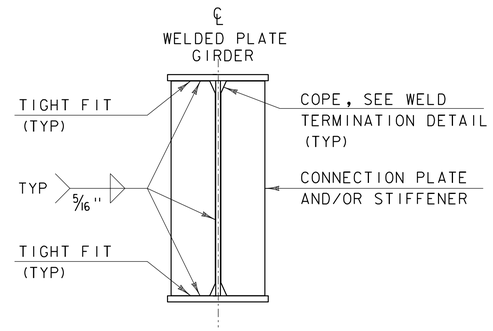

INTERMEDIATE CONNECTION PLATES AND/OR STIFFENERS FOR WELDED PLATE GIRDERS

INTERMEDIATE DETAIL IS ONLY USED WHEN PLATE DOES NOT OCCUR AT AN ABUTMENT OR PIER.

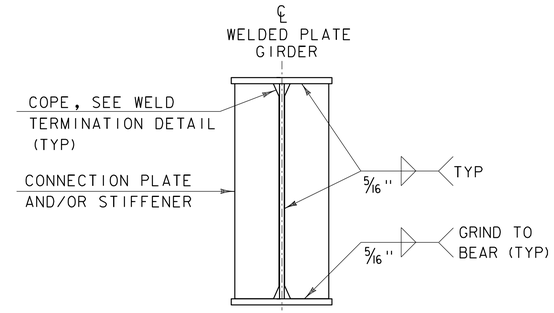

ABUTMENT BEARING STIFFENERS AND/OR CONNECTION PLATES FOR WELDED PLATE GIRDERS

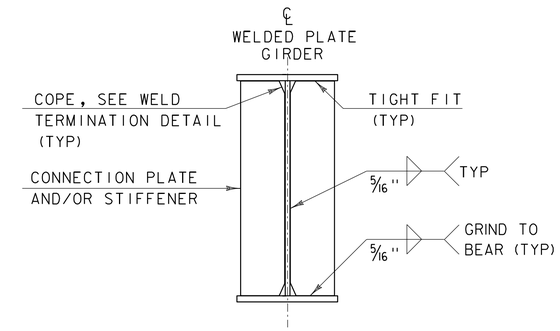

PIER BEARING STIFFENERS AND/OR CONNECTION PLATES FOR WELDED PLATE GIRDERS

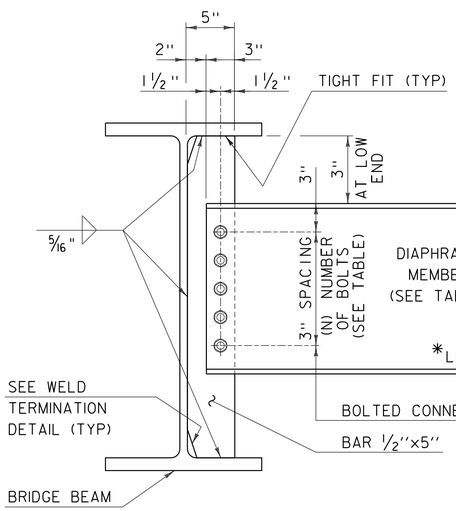

DEPTH		DIAPHRAGM MEMBER	(N) BOLTS
ROLLED BEAM	24" 30"	C15x33.9	4
	31" 36"	MC18x42.7	5
	37" 42"	W21x44	6
PLATE GIRDER WEB	31" 36"	W27x84	7
	37" 42"	W33x118	9
	43" 48"	W36x135	10

INTERMEDIATE DIAPHRAGMS FOR 24" TO 48" BRIDGE BEAMS

* IF CLEARANCE CANNOT BE MET, DIAPHRAGM MAY BE SLOPED.

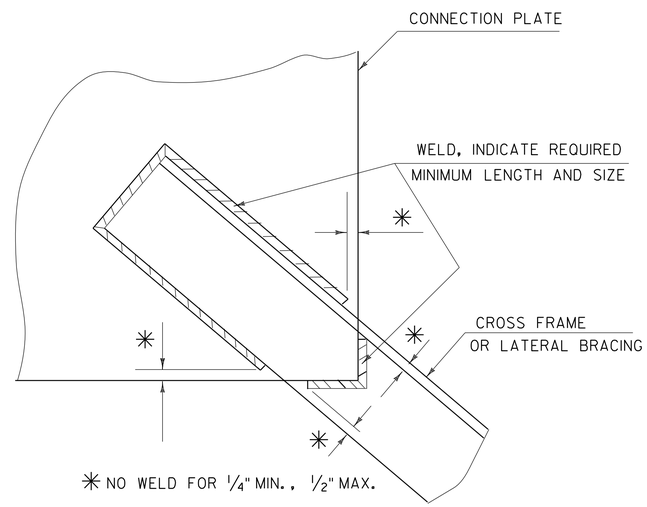

WELD LOCATION DETAIL AT CROSS FRAMES AND LATERAL BRACING

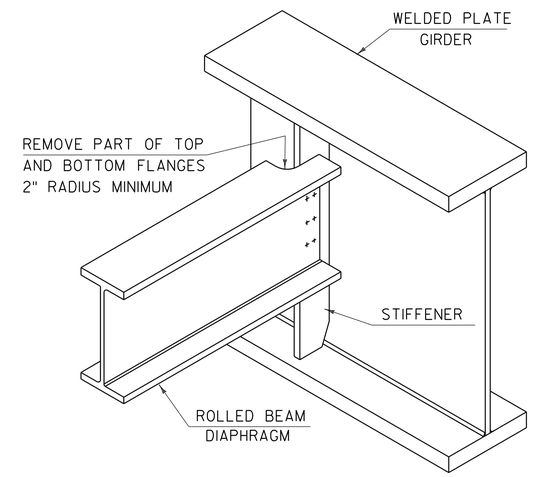

SEE CONTRACT DRAWINGS FOR SIZES OF MEMBERS AND CONNECTION DETAILS

ROLLED BEAM USED AS DIAPHRAGM

DETAILS ON THIS SHEET ARE "NOT TO SCALE" UNLESS NOTED OTHERWISE.

REVISIONS	
MAY 7, 2010	APPROVED FOR USE BY VAOT STRUCTURES SECTION
MAY 2, 2011	ADD INTERMEDIATE DIAPHRAGMS DETAIL & ADD NOT TO SCALE NOTE

STRUCTURAL STEEL PLATE GIRDER DETAILS AND NOTES

VERMONT AGENCY OF TRANSPORTATION * STRUCTURES - SECTION *

STRUCTURES DETAIL

SD-602.00